Box 05A

Book

18

JOB TRACKING PRODUCTION ORDER

Company Name: _____ **DATE:** _____

Order #: _____

	INITIALS:
☐ Hold Drawings & Update Files	_____
☐ Print Order	_____
☐ Return Superceded Originals	_____
☐ Return Originals	_____
☐ Packed & Shipped	_____

Date Sent: _____

Time Sent: _____ a.m. ☐ p.m. ☐

COMMENTS:

_____

_____

_____

WTC DRAWING
BOOK 18

WTCI-37-LERA

SKILLING, HELLE, CHRISTIANSEN, ROBERTSON — Structural & Civil Engineers

PROJECT	TITLE	DATE
THE WORLD TRADE CENTER	DRAWING BOOK 18 - ANCHOR STRAPS	

REVISIONS

18 - AB1 Anchor Straps - Key Plans - Core

18 - AB2 Anchor Straps - Details - Core

18 - AB3 Anchor straps - Key Plans - Exterior Wall

18 - AB4 Anchor straps - Details - Exterior Wall

Copies for ARA

Kirkpatrick - Complete books

DESIGNED

DRAWN

REVIEWED

SKILLING, HELLE, CHRISTIANSEN, ROBERTSON — Structural & Civil Engineers

PROJECT: THE WORLD TRADE CENTER | TITLE: DRAWING BOOK 18 - STRAP ANCHORS | DATE: 10/ 6/72

REVISIONS

PRINTED 5/18/73

18-AB

18-ABC- 0	5/18/73	18-AB1-38	4/30/69	18-AB2-23	12/13/68	18-AB2-66.3	4/30/69	18-AB3-14	2/ 7/69		
*18-AB1- 1	10A 1/69	18-AB1-39	4/30/69	18-AB2-24	10/ 1/69	18-AB2-67.1	4/30/69	18-AB4- 1	11/ 7/69		
18-A1 - 2	10/30/68	18-AB1-40	4/30/69	18-AB2-25	2/ 7/69	18-AB2-67.2	4/30/69	18-AB4- 2.1	2/ 7/69		
18-A1 - 3	10/30/68	18-AB1-41	4/30/69	18-AB2-26	5/28/69	18-AB2-68	4/30/69	18-AB4- 2.2	2/ 7/69		
18-B1 - 3.1	5/20/69	18-AB1-42	5/28/69	18-AB2-27	12/13/68	18-AB2-69.1	10/ 1/69	18-AB4- 3.1	2/ 7/69		
18-A1 - 4	10/30/68	18-AB1-43	5/28/69	18-AB2-28	12/13/68	18-AB2-69.2	10/ 1/69	18-AB4- 3.2	2/ 7/69		
18-B1 - 4.1	5/20/69	18-AB1-44	4/30/69	18-AB2-29	7/14/69	18-AB2-70	5/20/69	18-AB4- 3.3	2/ 7/69		
18-A1 - 5	10/30/68	18-AB1-45	4/30/69	18-AB2-30	12/13/68	18-AB2-71	5/20/69	18-AB4- 4.1	2/ 7/69		
18-B1 - 5.1	5/20/69	18-AB1-46	4/30/69	18-AB2-31	5/28/69	18-AB2-72	5/20/69	18-AB4- 4.2	2/ 7/69		
18-A1 - 6	10/30/68	18-AB1-47	4/30/69	18-AB2-32	5/28/69	18-AB2-73	5/28/69	18-AB4- 4.3	2/ 7/69		
18-B1 - 6.1	10/ 1/69	18-AB1-48	4/30/69	18-AB2-33	5/28/69	18-AB2-74.1	10/ 1/69	18-AB4- 4.4	2/ 7/69		
18-A1 - 7	10/16/68	18-AB1-49	4/30/69	18-AB2-34	4/30/69	18-AB2-74.2	10/ 1/69	18-AB4- 4.5	2/ 7/69		
18-B1 - 7.1	10/ 1/69	18-AB1-50	4/30/69	18-AB2-35	4/30/69	18-AB2-75	10/ 1/69	18-AB4- 5.1	2/ 7/69		
18-A1 - 8	12/13/68	18-AB1-51	4/30/69	18-AB2-36	4/30/69	18-AB2-76	10/ 1/69	18-AB4- 5.2	2/ 7/69		
18-B1 - 8.1	5/20/69	18-AB1-52	4/30/69	18-AB2-37	4/30/69	18-AB2-77.1	10/ 1/69	18-AB4- 5.3	2/ 7/69		
18-AB1- 9	5/20/69	18-AB1-53	4/30/69	18-AB2-38	4/30/69	18-AB2-77.2	10/ 1/69	18-AB4- 5.4	2/ 7/69		
18-AB1-10	5/20/69	18-AB1-54	4/30/69	18-AB2-39	4/30/69	18-AB2-78	10/ 1/69	18-AB4- 5.5	2/ 7/69		
18-AB1-11	5/20/69	18-AB1-55	4/30/69	18-AB2-40	4/30/69	18-AB2-79.1	10/ 1/69	18-AB4- 5.6	2/ 7/69		
18-AB1-12	5/20/69	18-AB1-56	4/30/69	18-AB2-41	4/30/69	18-AB2-79.2	10/ 1/69	18-AB4- 5.7	2/ 7/69		
18-A1 -13	12/13/68	18-AB1-57	4/30/69	18-AB2-42.1	4/30/69	18-AB2-80	10/ 1/69	18-AB4- 6.1	2/ 7/69		
18-B1 -13.1	10/ 1/69	18-AB1-58	4/30/69	18-AB2-42.2	4/30/69	18-AB2-81.1	10/ 1/69	18-AB4- 6.2	2/ 7/69		
18-A1 -14	12/13/68	18-AB1-59	7/14/69	18-AB2-42.3	4/30/69	18-AB2-81.2	10/ 1/69	18-AB4- 7.1	11/ 7/69		
18-B1 -14.1	10/ 1/69	18-AB1-60	7/14/69	18-AB2-43	4/30/69			18-AB4- 7.2	12/ 3/69		
18-A1 -15.1	2/ 7/69			18-AB2-44	5/20/69			18-AB4- 7.3	12/ 3/69		
18-B1 -15.2	10/ 1/69			18-AB2-50.1	10/16/68			18-AB4- 8.1	11/ 7/69		
18-B1 -15.3	10/ 1/69			18-AB2-50.2	10/16/68			18-AB4- 8.2	11/ 7/69		
18-AB1-16.1	2/ 7/69			18-AB2-51.1	2/ 7/69			18-AB4- 8.3	11/ 7/69		
18-B1 -16.2	10/ 1/69	18-AB2- 1	10/ 1/69	18-AB2-51.2	2/ 7/69			18-AB4- 9	11/ 7/69		
18-B1 -16.3	10/ 1/69	18-AB2- 2.1	2/ 7/69	18-AB2-52	10/30/68			18-AB4- 10.1	11/ 7/69		
18-AB1-17	2/ 7/69	18-AB2- 2.2	4/30/69	18-AB2-53	10/30/68	18-AB3- 1	11/ 7/69	18-AB4- 10.2	11/ 7/69		
18-AB1-18	2/ 7/69	18-AB2- 3	10/ 1/69	18-AB2-54.1	12/13/68	18-AB3- 2	2/ 7/69				
18-AB1-19	2/ 7/69	18-AB2- 4	10/ 1/69	18-AB2-54.2	5/20/69	18-AB3- 3.1	2/ 7/69				
18-AB1-20	2/ 7/69	18-AB2- 5	5/28/69	18-AB2-55	12/13/68	18-AB3- 3.2	2/ 7/69				
18-AB1-21	2/ 7/69	18-AB2- 6	4/30/69	18-AB2-56	12/13/68	18-AB3- 4.1	2/ 7/69				
18-AB1-22	2/ 7/69	18-AB2- 7	10/ 1/69	18-AB2-57.1	10/ 1/69	18-AB3- 4.2	2/ 7/69				
18-AB1-23	5/28/69	18-AB2- 8	10/16/68	18-AB2-57.2	12/13/68	18-AB3- 4.3	11/ 7/69				
18-AB1-24	5/28/69	18-AB2- 9	10/ 1/69	18-AB2-57.3	10/ 1/69	18-AB3- 4.4	11/ 7/69				
18-AB1-25	5/28/69	18-AB2-10	2/ 7/69	18-AB2-57.4	12/13/68	18-AB3- 4.5	11/ 7/69				
18-AB1-26	5/28/69	18-AB2-11	10/30/68	18-AB2-58	12/13/68	18-AB3- 4.6	11/ 7/69				
18-AB1-27	4/30/69	18-AB2-12	10/ 1/69	18-AB2-59	2/ 7/69	18-AB3- 5	2/ 7/69				
18-AB1-28	4/30/69	18-AB2-13	10/ 1/69	18-AB2-60	4/30/69	18-AB3- 6	2/ 7/69				
18-AB1-29	4/30/69	18-AB2-14	5/20/69	18-AB2-61	4/30/69	18-AB3- 7.1	2/ 7/69				
18-AB1-30	4/30/69	18-AB2-15	5/28/69	18-AB2-62.1	4/30/69	18-AB3- 7.2	2/ 7/69				
18-AB1-31	4/30/69	18-AB2-16	5/28/69	18-AB2-62.2	4/30/69	18-AB3- 8.1	2/ 7/69				
18-AB1-32	4/30/69	18-AB2-17	5/28/69	18-AB2-63	4/30/69	18-AB3- 8.2	2/ 7/69				
18-AB1-33	4/30/69	18-AB2-18	5/28/69	18-AB2-64.1	4/30/69	18-AB3- 9	2/ 7/69				
18-AB1-34	4/30/69	18-AB2-19	4/30/69	18-AB2-64.2	4/30/69	18-AB3-10	2/ 7/69				
18-AB1-35	4/30/69	18-AB2-20	4/30/69	18-AB2-65	4/30/69	18-AB3-11	2/ 7/69				
18-AB1-36	4/30/69	18-AB2-21	5/28/69	18-AB2-66.1	4/30/69	18-AB3-12	2/ 7/69				
18-AB1-37	4/30/69	18-AB2-22	5/20/69	18-AB2-66.2	4/30/69	18-AB3-13	2/ 7/69				

LICENSED PROFESSIONAL ENGINEER LESLIE E. ROBERTSON No. 34360 OF THE STATE OF NEW YORK

*= NO RECORD

SKILLING, HELLE, CHRISTIANSEN, ROBERTSON — Structural & Civil Engineers

PROJECT: THE WORLD TRADE CENTER | TITLE: ANCHOR STRAPS - KEY PLAN - ELEV. 242 - TOWER A | DATE: 10/30/68

REVISIONS

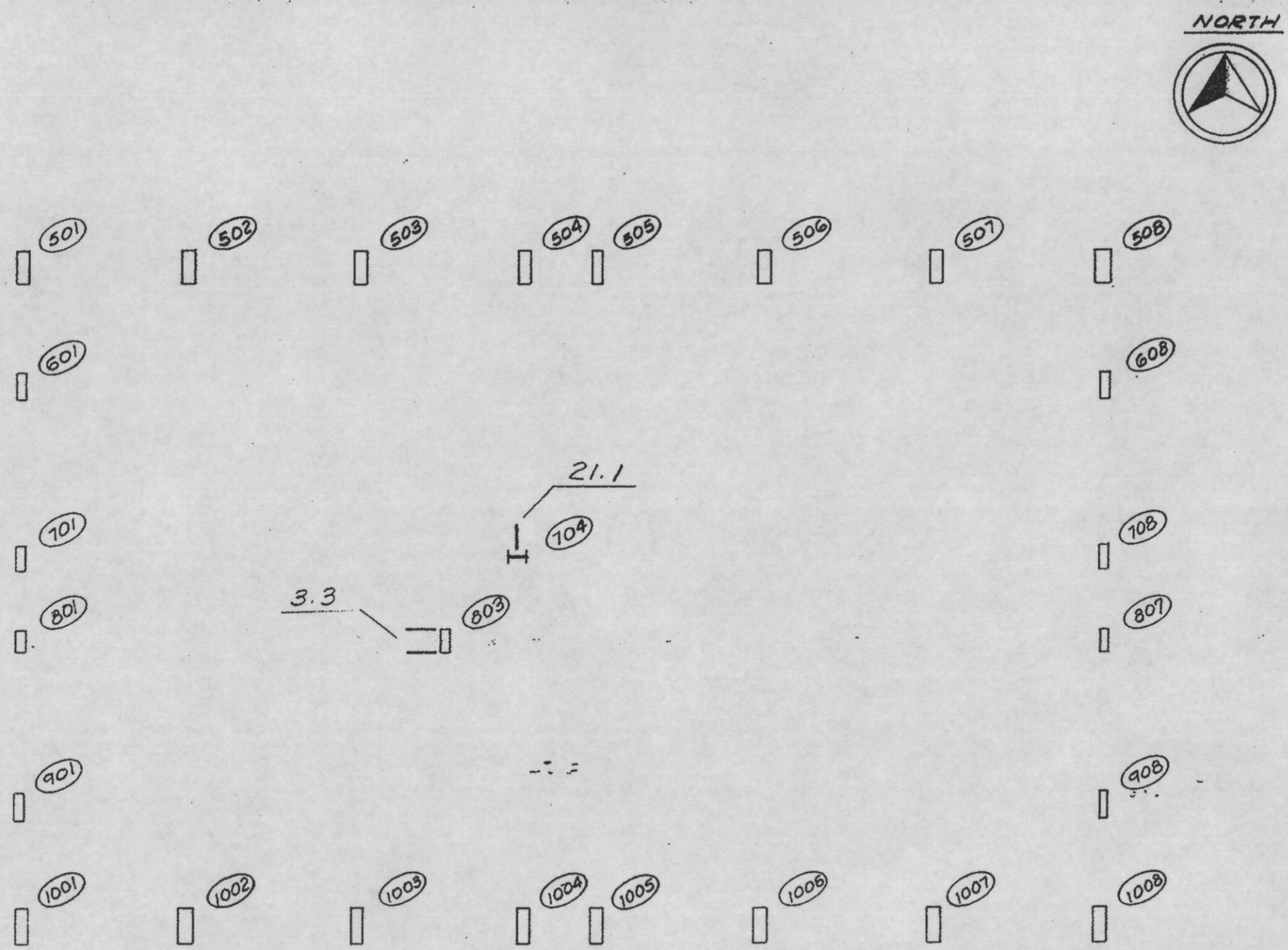

LICENSED PROFESSIONAL ENGINEER
LESLIE E. ROBERTSON
No. 34360
UNIVERSITY OF THE STATE OF NEW YORK

SIGNED

DRAWN
Wexler

REVIEWED

18-A1-2

SKILLING, HELLE, CHRISTIANSEN, ROBERTSON — Structural & Civil Engineers

PROJECT THE WORLD TRADE CENTER | TITLE STRAP ANCHORS - KEY PLAN - ELEV. 264 - TOWER A | DATE 6/20/68

REVISIONS

NORTH

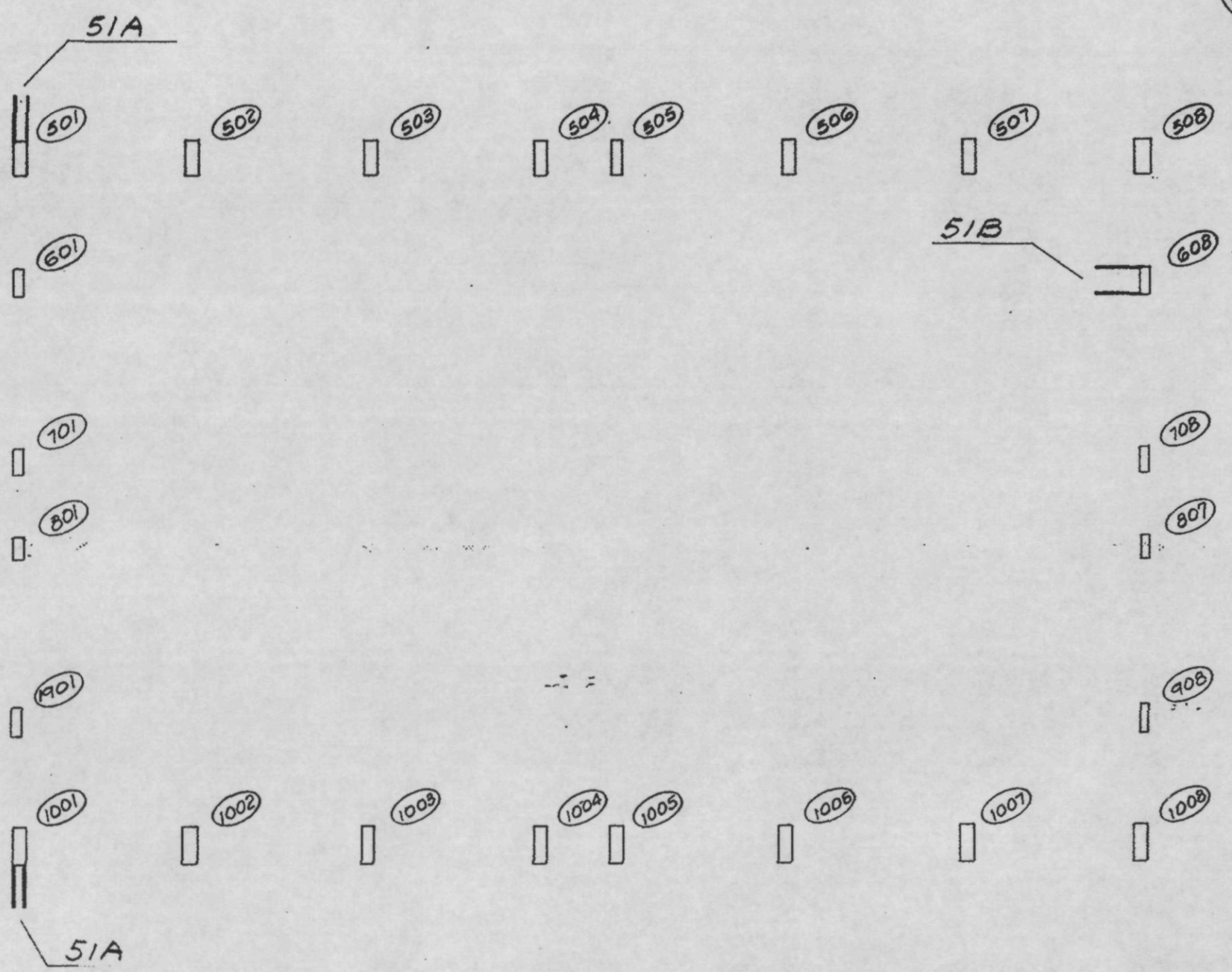

LICENSED PROFESSIONAL ENGINEER
LESLIE E. ROBERTSON
No. 34360
UNIVERSITY OF THE STATE OF NEW YORK

DESIGNED

DRAWN
Wexler

REVIEWED

18-A1-3

SKILLING, HELLE, CHRISTIANSEN, ROBERTSON — Structural & Civil Engineers

PROJECT	THE WORLD TRADE CENTER
TITLE	ANCHOR PLATE KEY PLAN FLOORS TOWER A (See Table)
DATE	2-7-69

REVISIONS

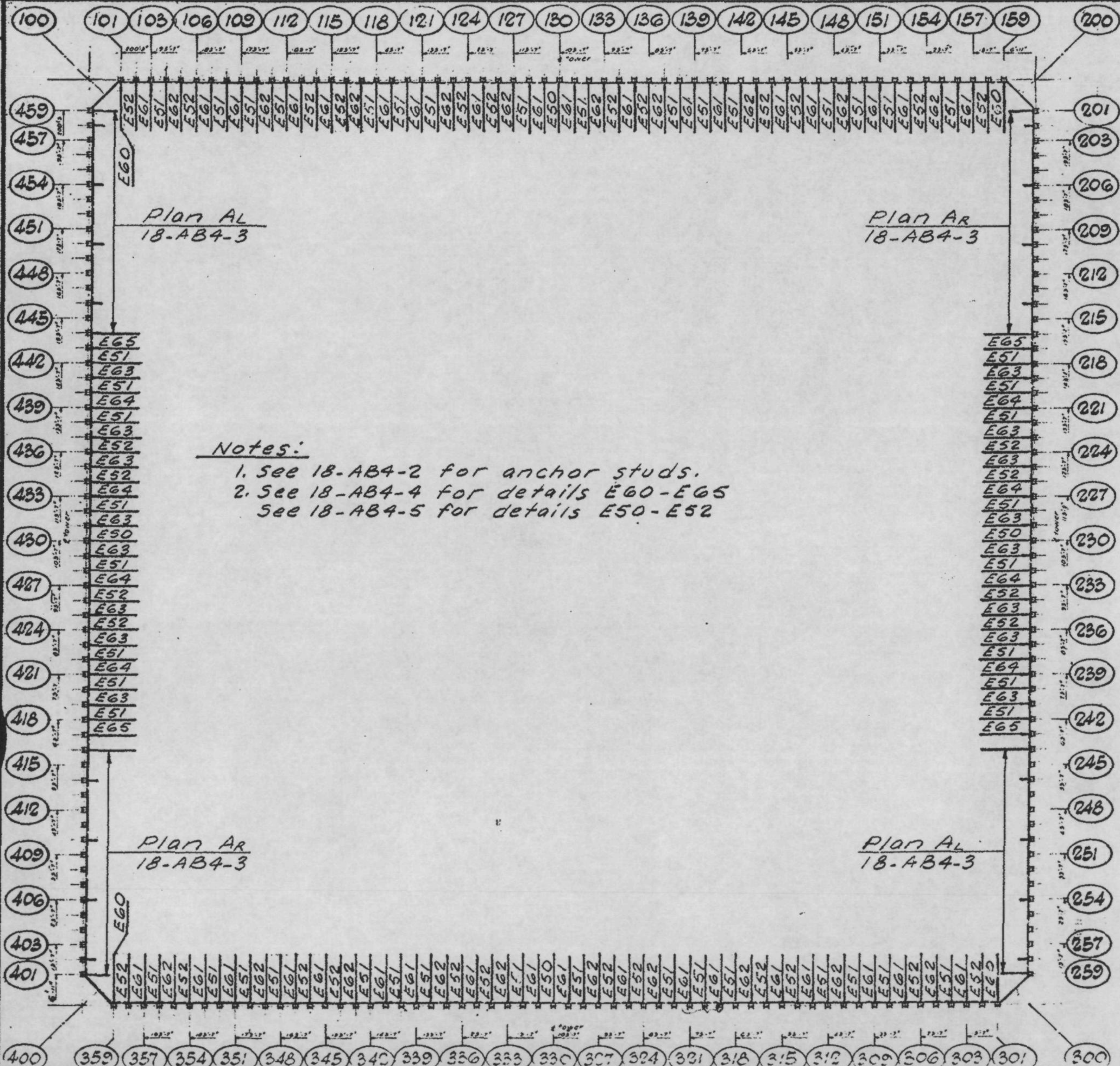

NORTH

TOWER A

Floors Included
10-24
26-40
50-58
60-74
84-91
93-106

Notes:

1. See 18-AB4-2 for anchor studs.
2. See 18-AB4-4 for details E60-E65
   See 18-AB4-5 for details E50-E52

LICENSED PROFESSIONAL ENGINEER — LESLIE E. ROBERTSON — No. 34360 — UNIVERSITY OF THE STATE OF NEW YORK

DESIGNED: J. Karp

DRAWN: A. Franqui

REVIEWED: [illegible]

18-A3-4.1

SKILLING, HELLE, CHRISTIANSEN, ROBERTSON — Structural & Civil Engineers

PROJECT THE WORLD TRADE CENTER | TITLE STRAP ANCHORS - KEY PLAN - ELEV. 264 - TOWER 'B' | DATE 5-20-69

REVISIONS

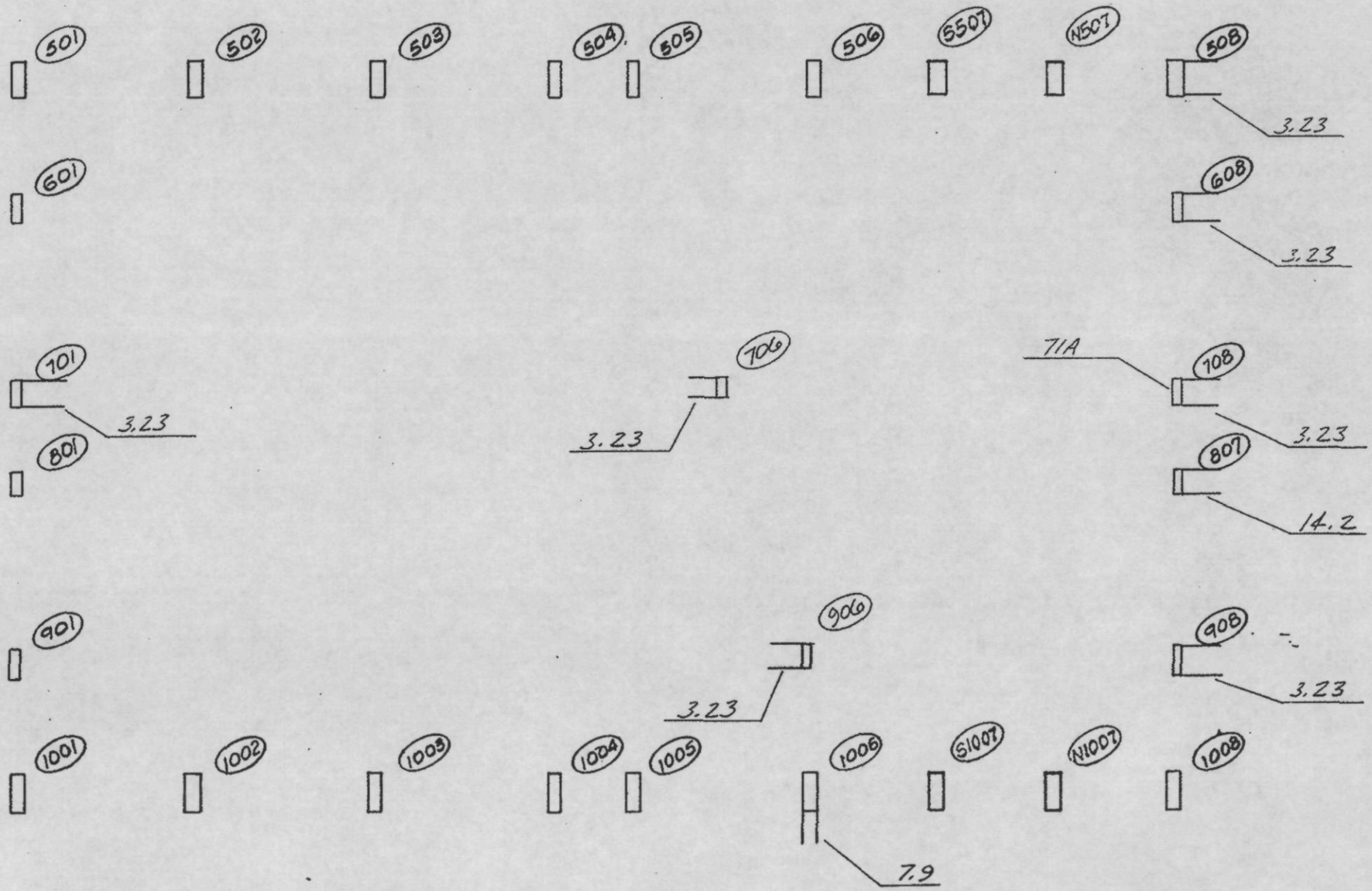

LICENSED PROFESSIONAL ENGINEER
LESLIE E. ROBERTSON
No. 34360
UNIVERSITY OF THE STATE OF NEW YORK

DESIGNED

DRAWN S.T.M.

REVIEWED W. Brewer

18-31-3.1

SKILLING, HELLE, CHRISTIANSEN, ROBERTSON — Structural & Civil Engineers

PROJECT THE WORLD TRADE CENTER | TITLE STRAP ANCHORS - KEY PLAN - EL 274 - TOWER A | DATE 10/30/68

REVISIONS

NORTH

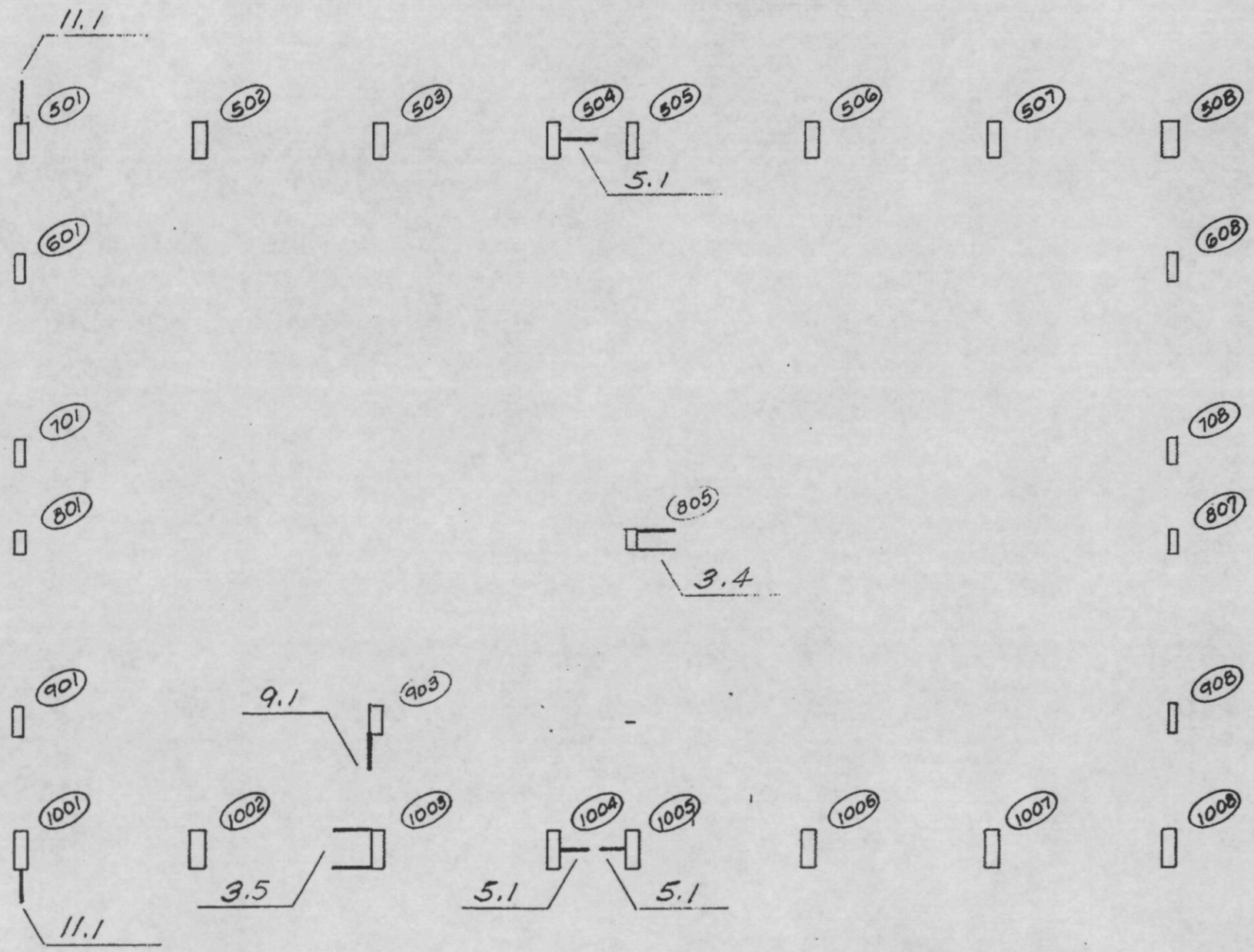

LICENSED PROFESSIONAL ENGINEER
LESLIE E. ROBERTSON
No. 34360
UNIVERSITY OF THE STATE OF NEW YORK

DESIGNED L. O'Neill

DRAWN S. Wexler

REVIEWED

18-A1-4

SKILLING, HELLE, CHRISTIANSEN, ROBERTSON — Structural & Civil Engineers

WORK: THE WORLD TRADE CENTER | TITLE: STORM ANCHORS - KEY PLAN - BOBY 274 - TOWER 1 & 2 | DATE: 5-10-68

REVISIONS

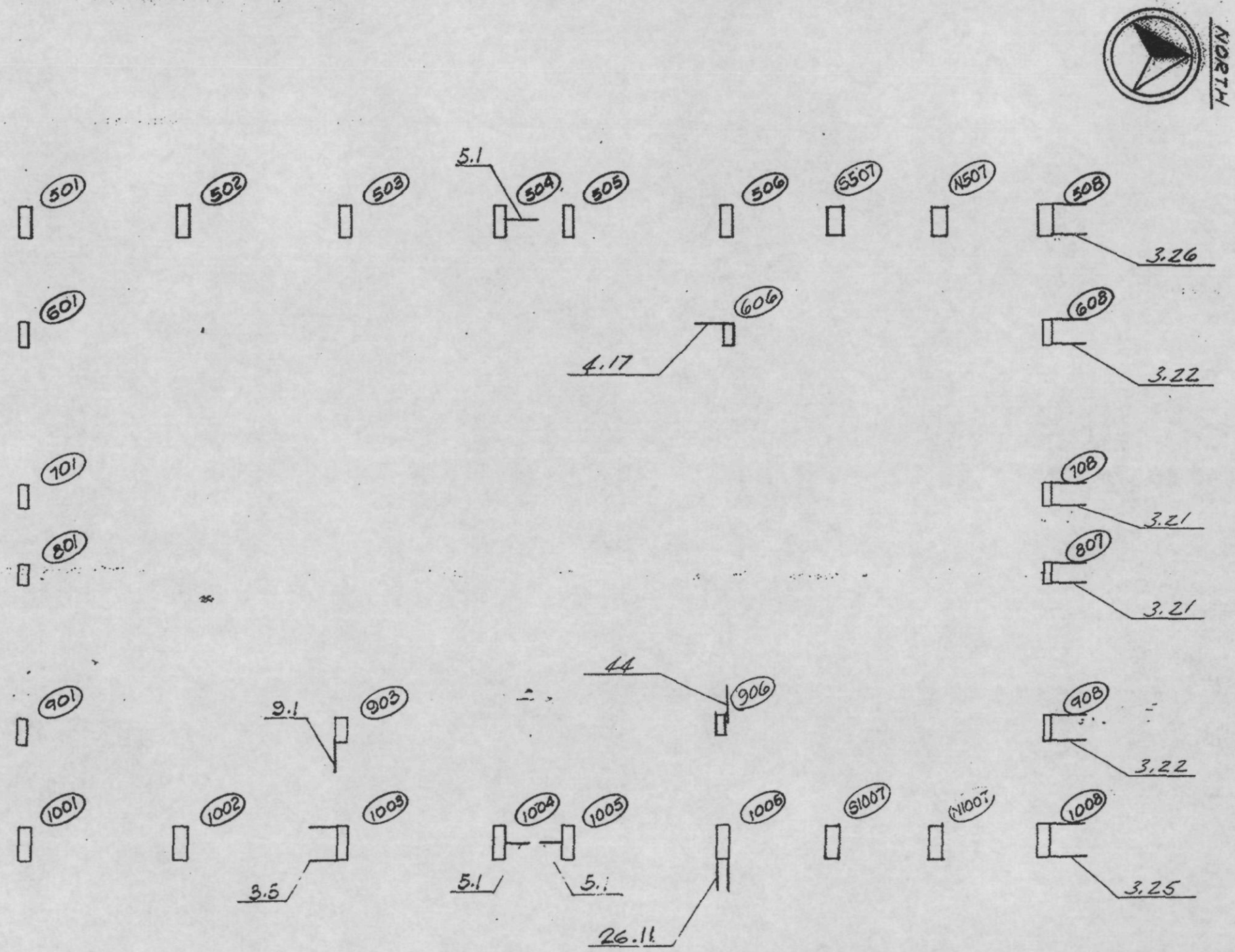

LICENSED PROFESSIONAL ENGINEER
LESLIE E. ROBERTSON
No. 34360
CITY OF THE STATE OF NEW YORK

DRAWN
S.T.M.

REVIEWED
C.W. Brewer

18-31-4.1

SKILLING, HELLE, CHRISTIANSEN, ROBERTSON — Structural & Civil Engineers

THE WORLD TRADE CENTER | STRAP ANCHORS - KEY PLAN - EL 264 - TOWER A | 10-30-68

REVISIONS

NORTH

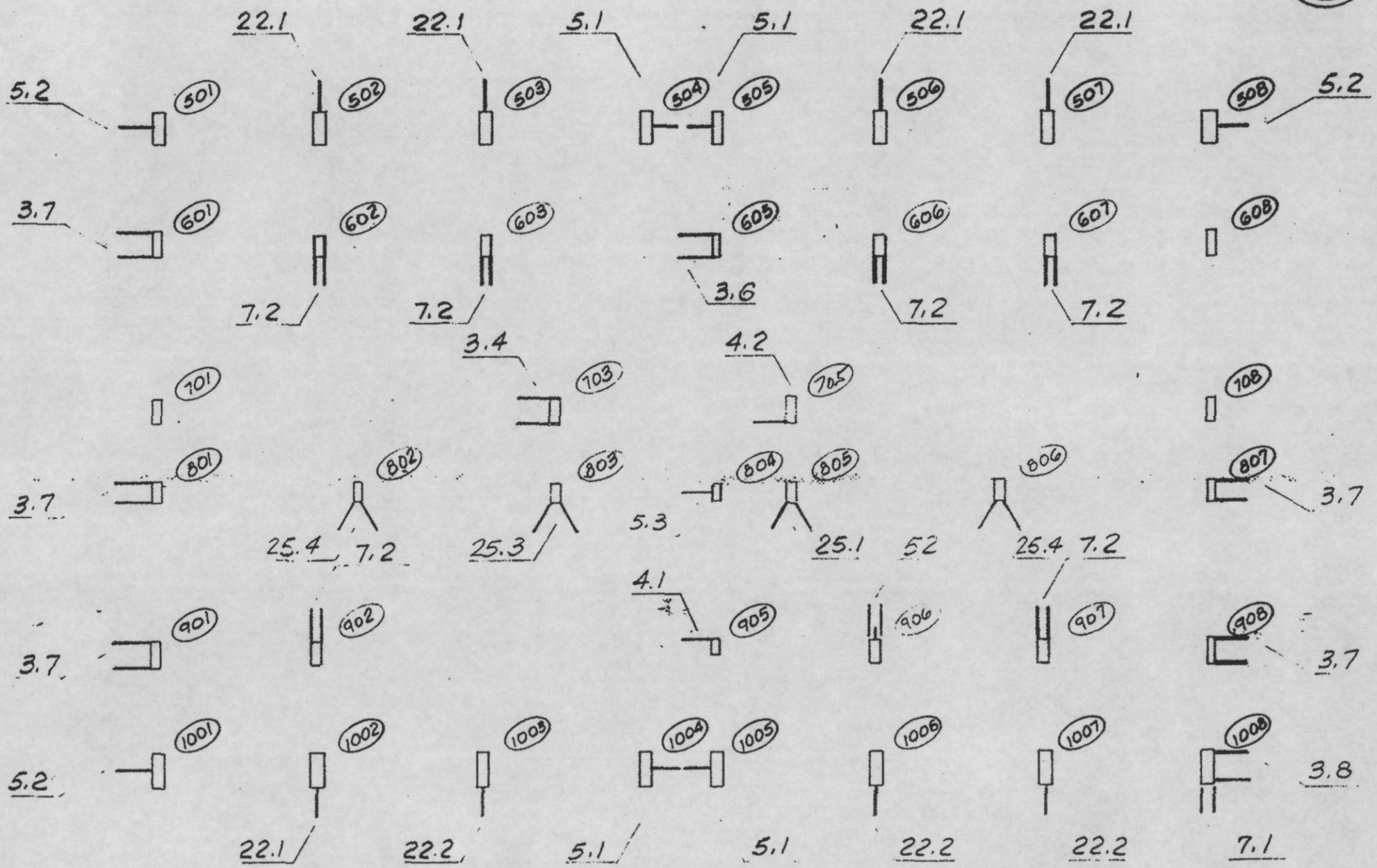

LICENSED PROFESSIONAL ENGINEER — LESLIE E. ROBERTSON — No. 34360 — STATE OF NEW YORK

DESIGNED
D. Neill

DRAWN
Wexler

REVIEWED

18-A1-5

SKILLING, HELLE, CHRISTIANSEN, ROBERTSON — Structural & Civil Engineers

PROJECT THE WORLD TRADE CENTER | TITLE STRAP ANCHORS - KEY PLAN - ELEV. 284 - TOWER '8' | DATE 5-20-69

REVISIONS

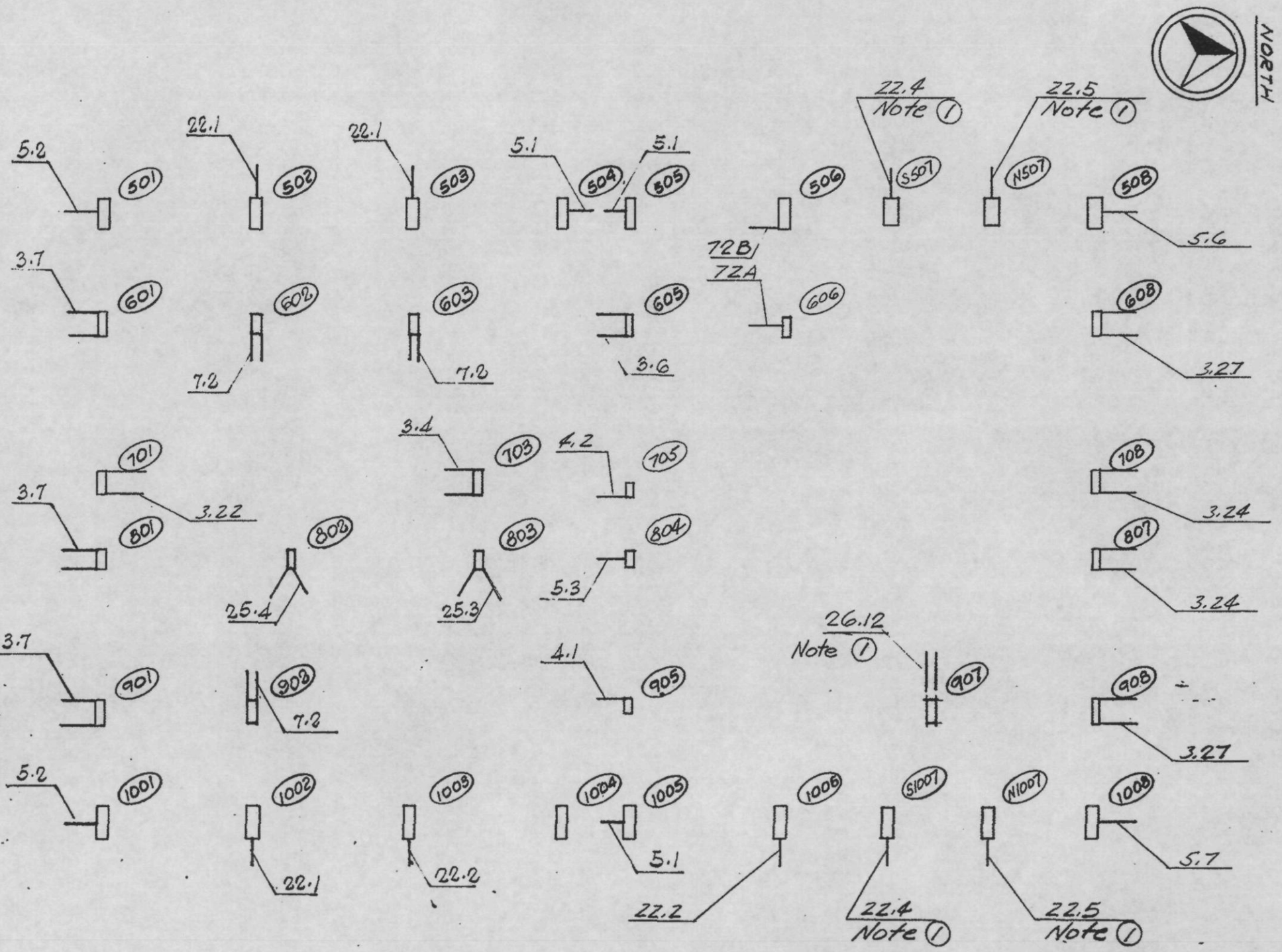

Note (1): Install after removal of existing PATH tube.

LICENSED PROFESSIONAL ENGINEER — LESLIE E. ROBERTSON — No. 34360 — UNIVERSITY OF THE STATE OF NEW YORK

DESIGNED

DRAWN S.T.M.

REVIEWED W. Brewer

18-B;-5.1

SKILLING, HELLE, CHRISTIANSEN, ROBERTSON — Structural & Civil Engineers

PROJECT THE WORLD TRADE CENTER | TITLE STRAP ANCHORS - KEY PLAN - EL 294 - TOWER A | DATE 10/30/68

REVISIONS

NORTH

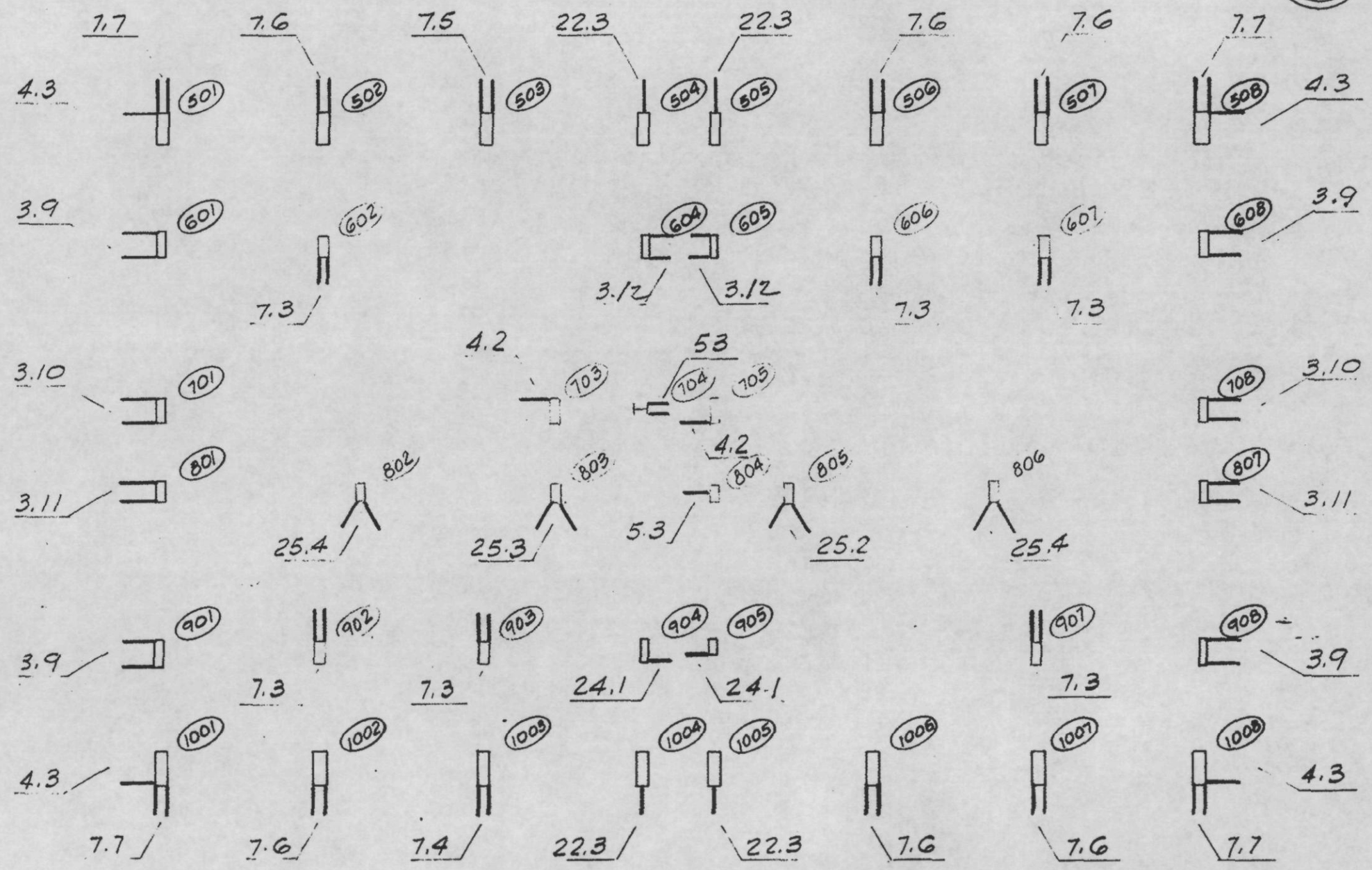

LICENSED PROFESSIONAL ENGINEER — LESLIE E. ROBERTSON — No. 34360 — UNIVERSITY OF THE STATE OF NEW YORK

DESIGNED L. O'Neill

DRAWN S. Wexler

REVIEWED

18-A1-6

SMILLING HELLE CHRISTIANSEN ROBERTSON Structural & Civil Engineers

PROJECT THE WORLD TRADE CENTER | TITLE STRAP ANCHORS - KEY PLAN - ELEV. 294 - TOWER B | DATE 5-20-69

REVISIONS

-69

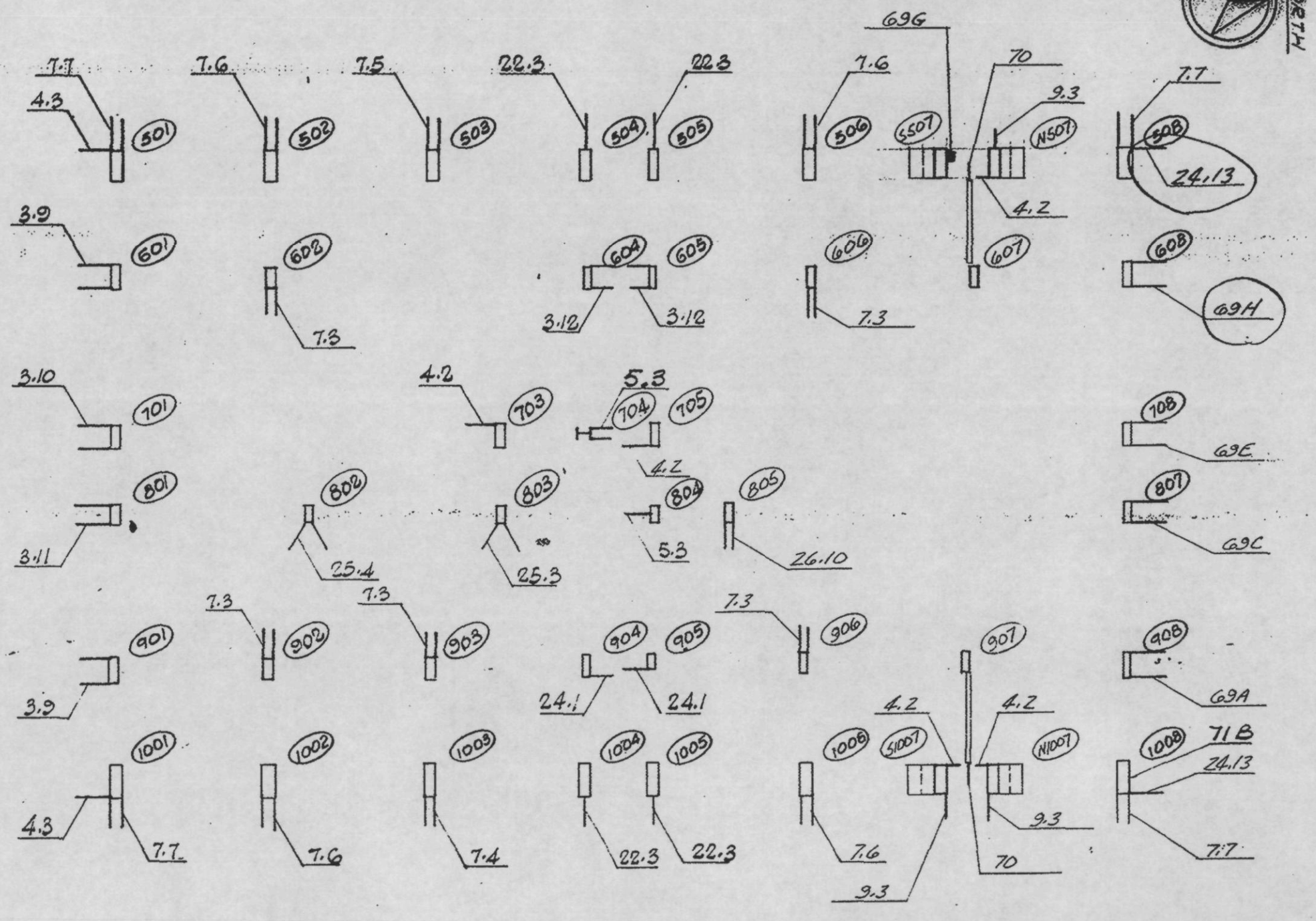

LICENSED PROFESSIONAL ENGINEER
LESLIE E. ROBERTSON
No. 34360
UNIVERSITY OF THE STATE OF NEW YORK

DRAWN
S.T.M.

REVIEWED
D. Brewer

8-B1-6.1

SKILLING, HELLE, CHRISTIANSEN, ROBERTSON — Structural & Civil Engineers

PROJECT THE WORLD TRADE CENTER | TITLE ANCHOR STRAPS. KEY PLAN -FLOOR 1 - TOWER A | DATE 10-16-68

REVISIONS

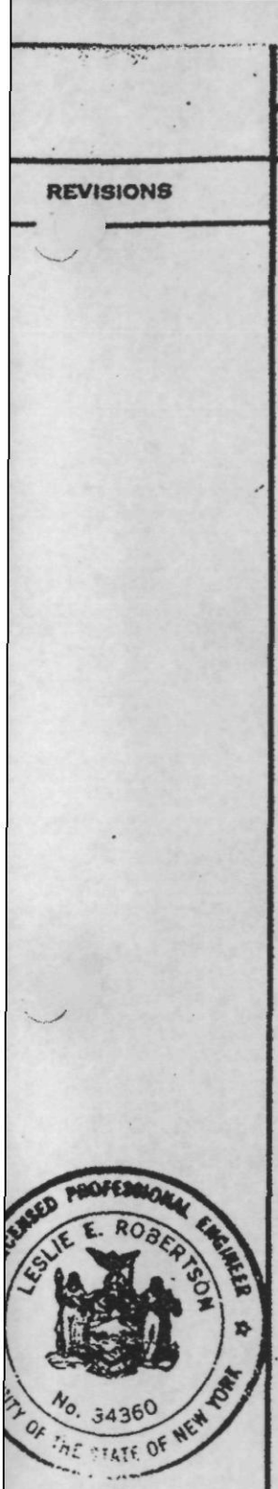

DRAWN
Wexler

REVIEWED

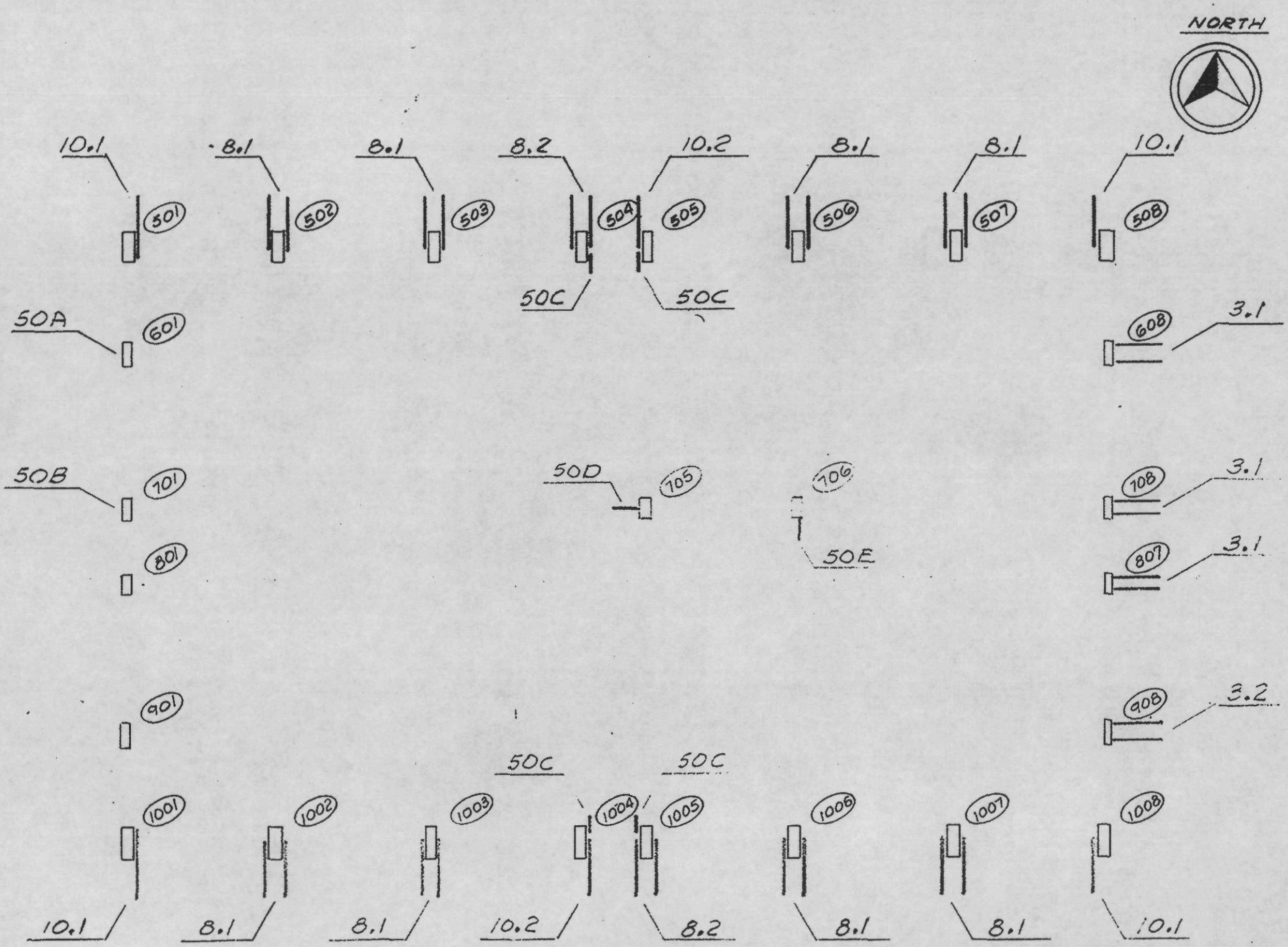

18-A1-7

SKILLING, HELLE, CHRISTIANSEN, ROBERTSON — Structural & Civil Engineers

PROJECT THE WORLD TRADE CENTER | TITLE ANCHOR STRAPS - KEY PLAN - FLOOR 1 - TOWER 2 | DATE 5-20-69

PROVISIONS

1-1-69

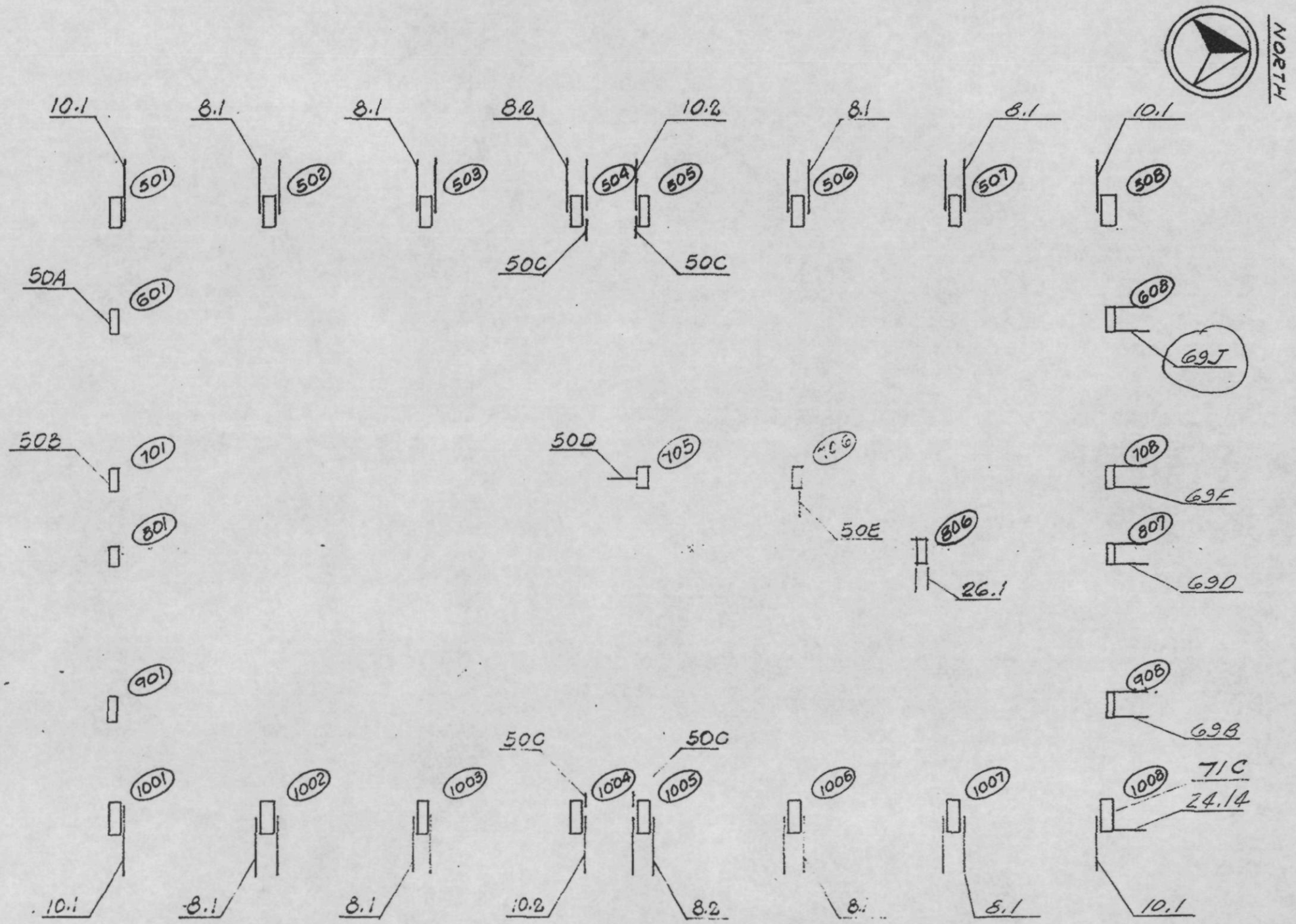

LICENSED PROFESSIONAL ENGINEER
LESLIE E. ROBERTSON
No. 34360
NEW YORK
CITY OF THE STATE OF

DESIGNED

DRAWN
S.T.N.

REVIEWED
W. Brewer

18-B1-7.1

SKILLING, HELLE, CHRISTIANSEN, ROBERTSON — Structural & Civil Engineers

PROJECT: THE WORLD TRADE CENTER | TITLE: ANCHOR STRAPS - KEY PLAN - FLOOR 2 - TOWER A | DATE: 12-13-68

REVISIONS

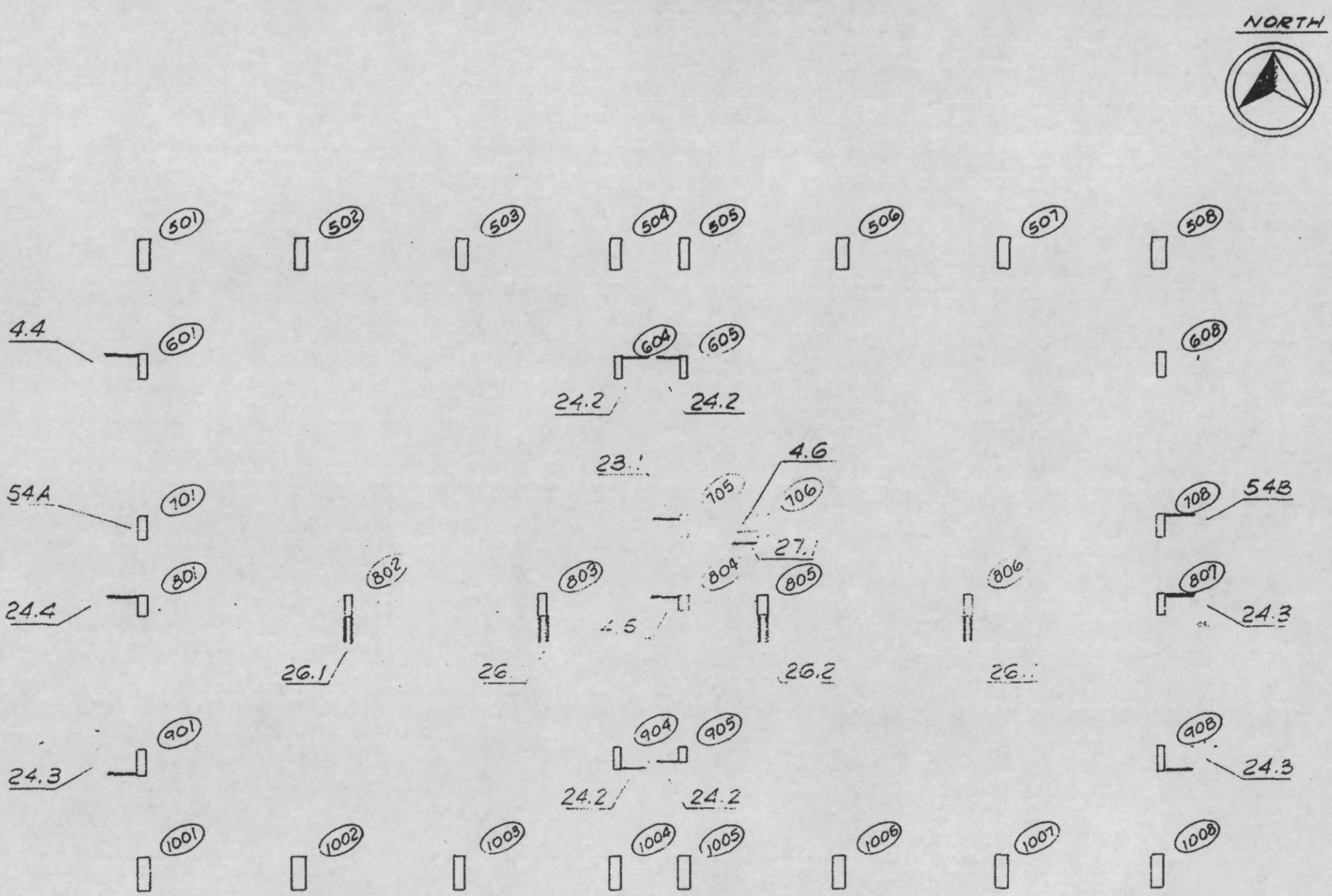

LESLIE E. ROBERTSON — LICENSED PROFESSIONAL ENGINEER — No. 34360 — CITY OF THE STATE OF NEW YORK

SIGNED: O'Neill

DRAWN: S Wexler

REVIEWED

18-A1-8

SKILLING, HELLE, CHRISTIANSEN, ROBERTSON — Structural & Civil Engineers

PROJECT THE WORLD TRADE CENTER | TITLE STRAP ANCHORS - KEY PLAN - FLOOR 2 - TOWER B | DATE 5-20-69

VISIONS

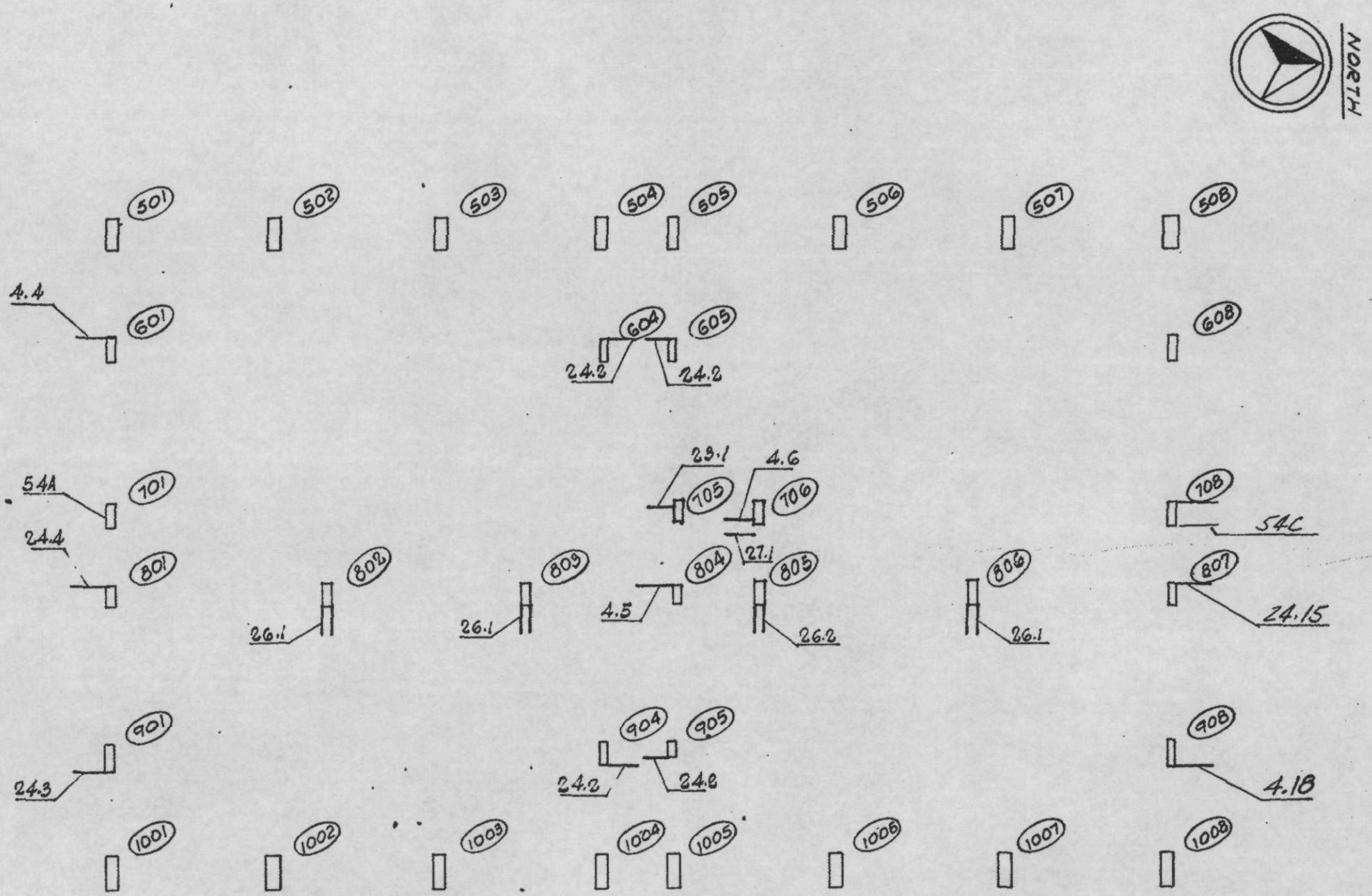

LICENSED PROFESSIONAL ENGINEER
LESLIE E. ROBERTSON
No. 34360
UNIVERSITY OF THE STATE OF NEW YORK

SIGNED

DRAWN S.T.M.

REVIEWED W. Brewer

18-81-8.1

SKILLING, HELLE, CHRISTIANSEN, ROBERTSON — Structural & Civil Engineers

PROJECT THE WORLD TRADE CENTER | TITLE STRAP ANCHORS - KEY PLANS - FLOOR 3 | DATE 12-13-68

SIONS

5-20-69

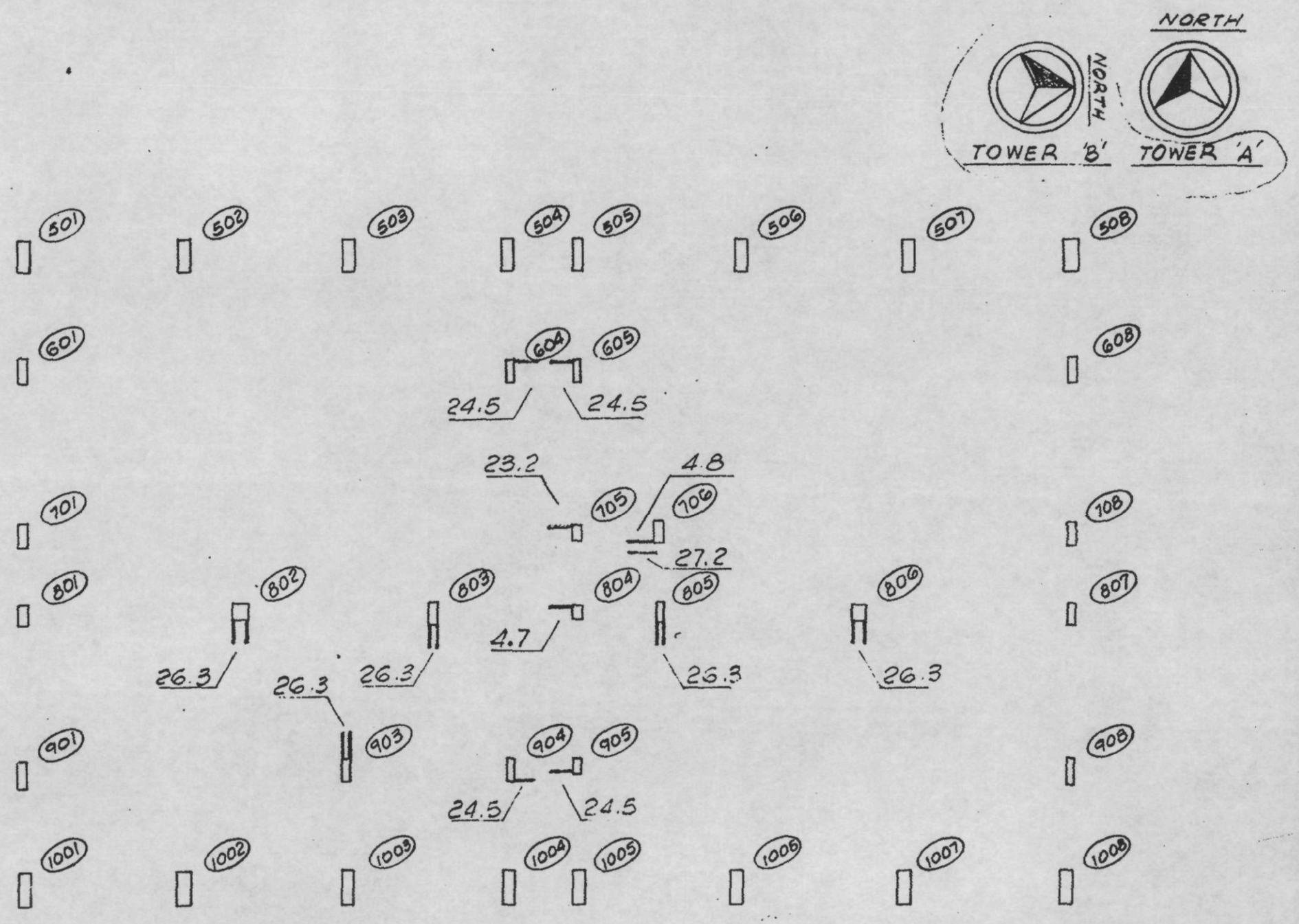

LICENSED PROFESSIONAL ENGINEER
LESLIE E. ROBERTSON
No. 34360
UNIVERSITY OF THE STATE OF NEW YORK

DESIGNED L. O'Neill

DRAWN S. Wexler

REVIEWED M. Brewer

18-AB1-9

SKILLING, HELLE, CHRISTIANSEN, ROBERTSON — Structural & Civil Engineers

PROJECT THE WORLD TRADE CENTER | TITLE STRAP ANCHORS - KEY PLANS - FLOOR 4 | DATE 12-13-68

REVISIONS

40-69

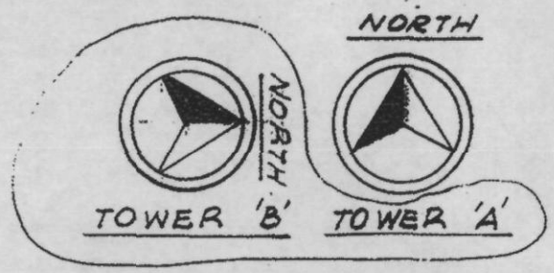

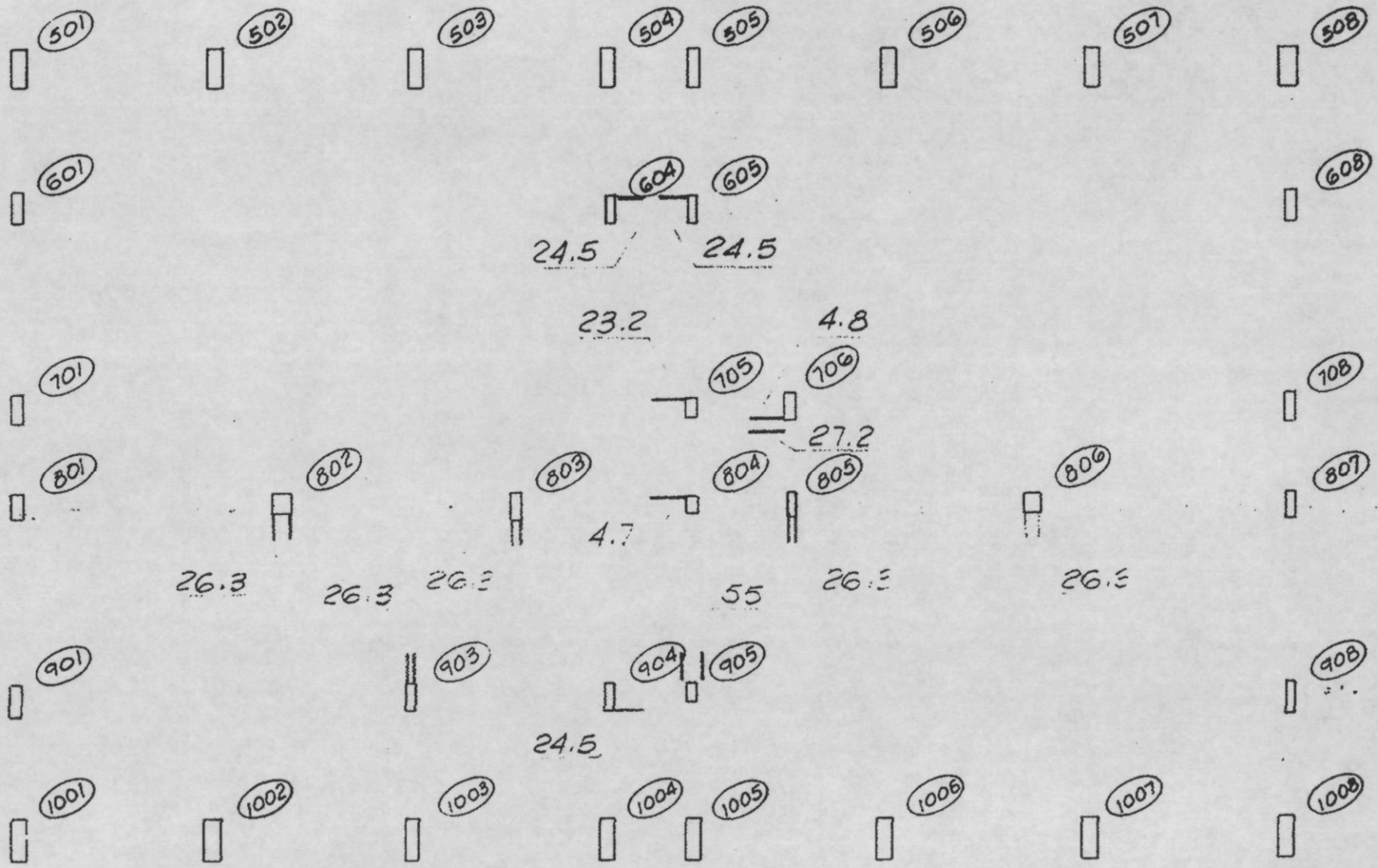

LICENSED PROFESSIONAL ENGINEER
LESLIE E. ROBERTSON
No. 34360
STATE OF NEW YORK

CHECKED O'Neill

DRAWN Wexler

REVIEWED W. Brewer

18-AB1-10

SKILLING, HELLE, CHRISTIANSEN, ROBERTSON — Structural & Civil Engineers

PROJECT THE WORLD TRADE CENTER | TITLE STRAP ANCHORS - KEY PLANS - FLOOR 5 | DATE 12-13-68

REVISIONS

5-20-69

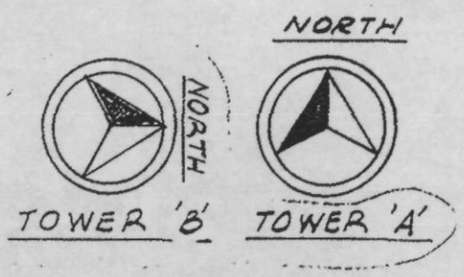

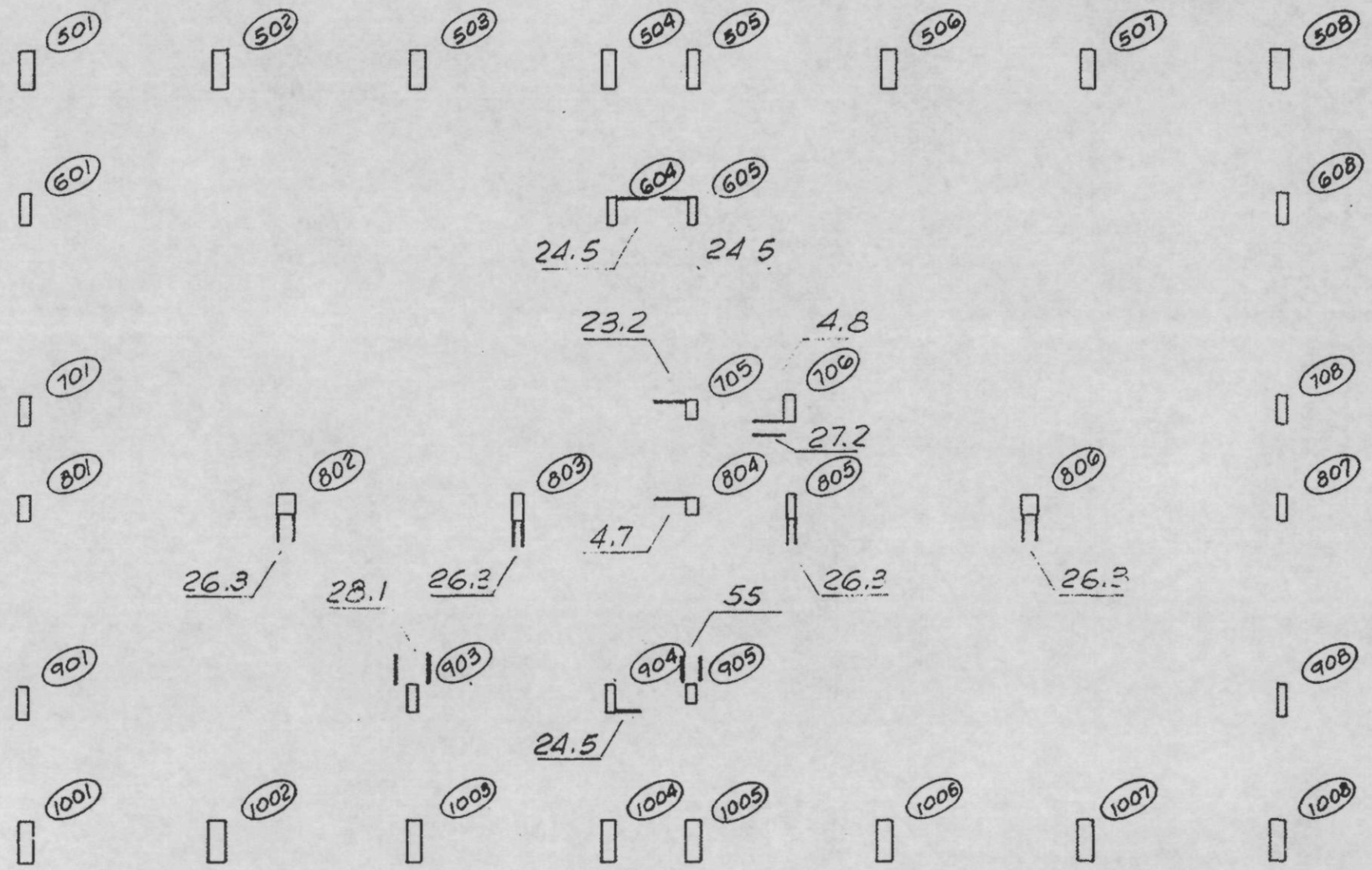

LICENSED PROFESSIONAL ENGINEER
LESLIE E. ROBERTSON
No. 34360
UNIVERSITY OF THE STATE OF NEW YORK

DESIGNED L. O'Neill

DRAWN S. Wexler

REVIEWED L. D. Brewer

18-AB1-11

SKILLING, HELLE, CHRISTIANSEN, ROBERTSON — Structural & Civil Engineers

PROJECT THE WORLD TRADE CENTER | TITLE STRAP ANCHORS - KEY PLANS - FLOOR 6. ( ) | DATE 12-13-68

REVISIONS

5-20-69

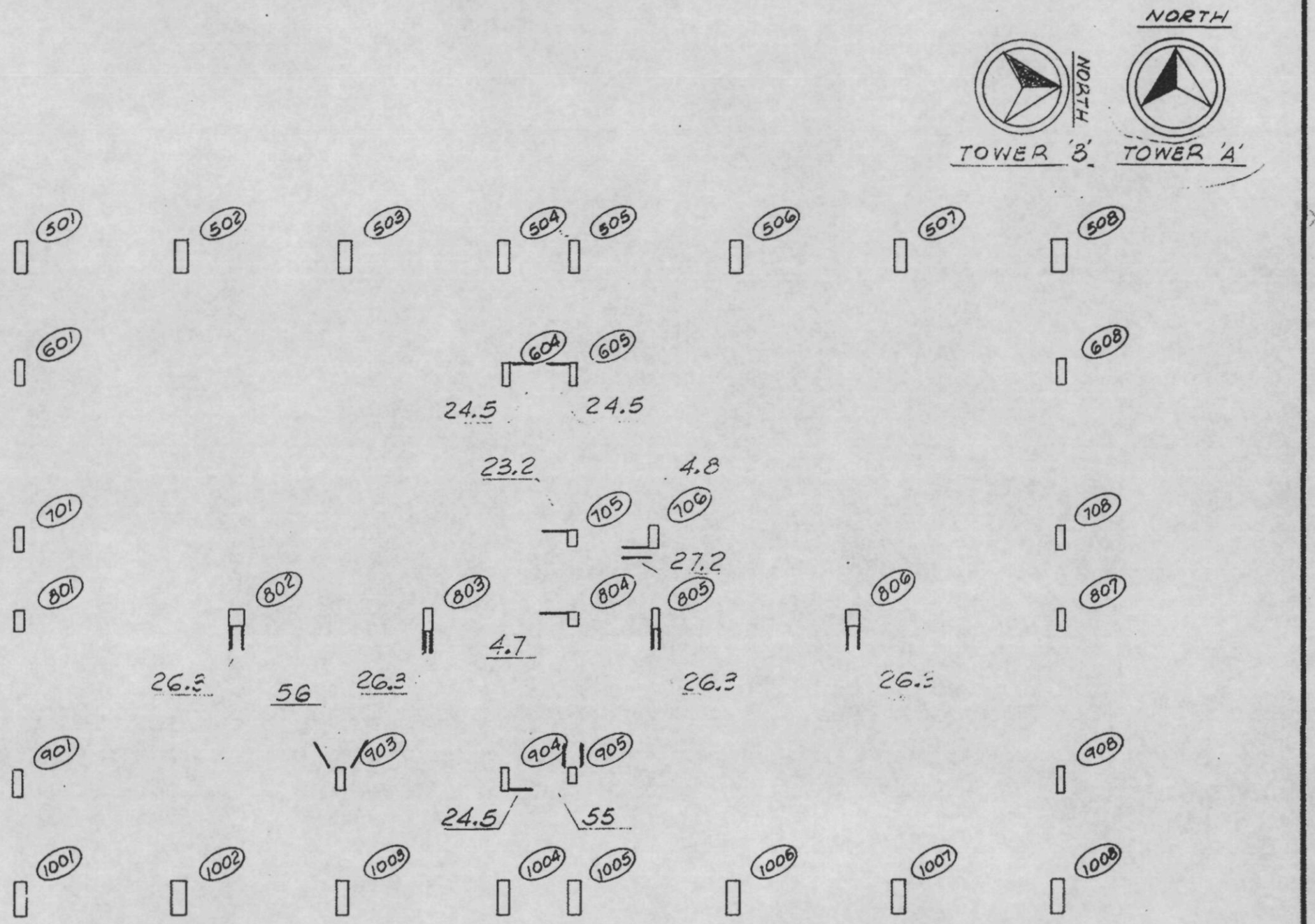

LICENSED PROFESSIONAL ENGINEER
LESLIE E. ROBERTSON
No. 34360
UNIVERSITY OF THE STATE OF NEW YORK

DESIGNED E. O'Neill

DRAWN S. Wexler

REVIEWED W. Brewer

18-A81-12

SKILLING, HELLE, CHRISTIANSEN, ROBERTSON — Structural & Civil Engineers

PROJECT THE WORLD TRADE CENTER | TITLE ANCHOR STRAPS - KEY PLAN - FLOOR 7 - TOWER A | DATE 12-13-68

REVISIONS

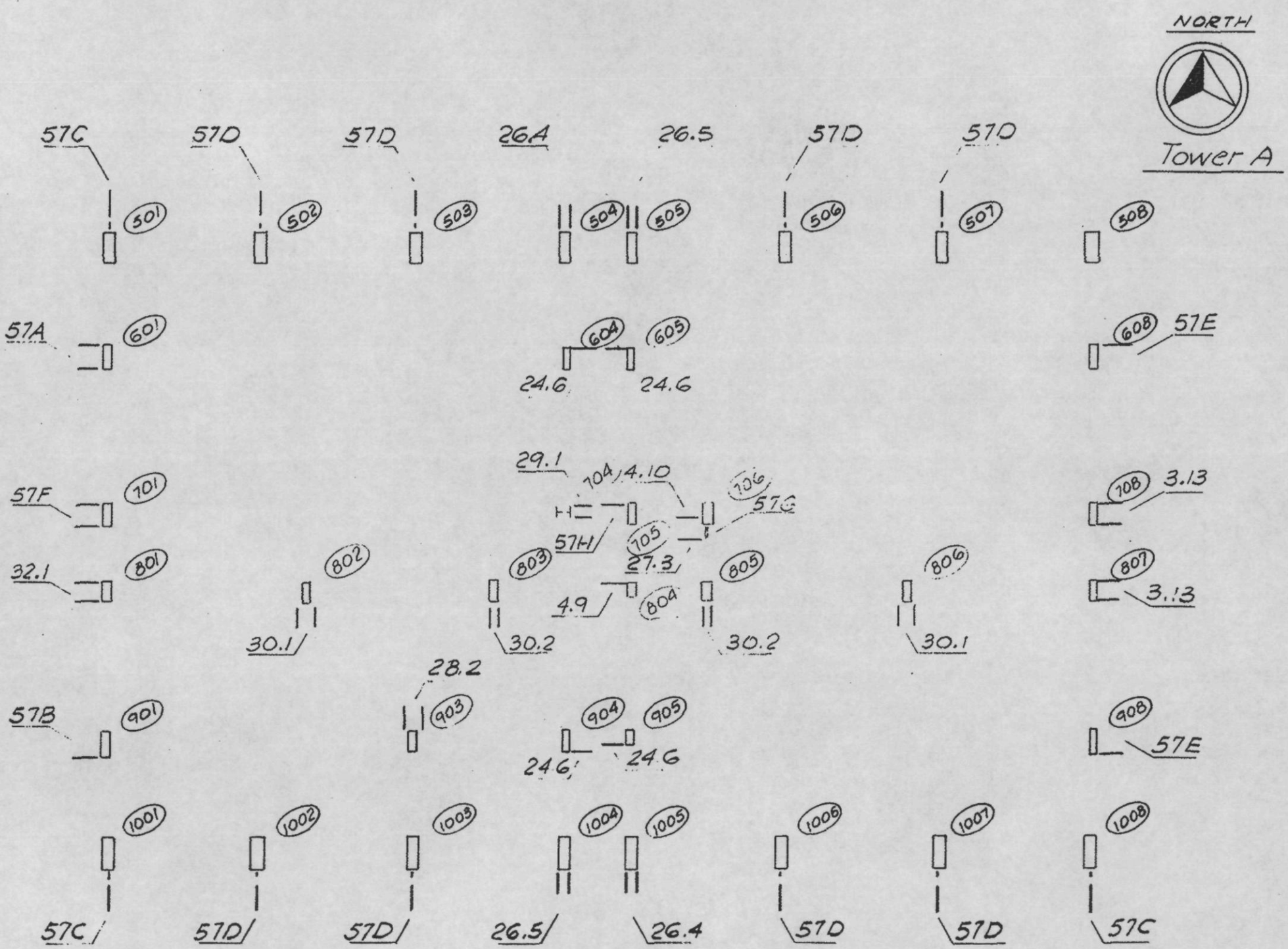

LICENSED PROFESSIONAL ENGINEER
LESLIE E. ROBERTSON
No. 34360
UNIVERSITY OF THE STATE OF NEW YORK

DESIGNED L. O'Neil

DRAWN S. Wexler.

REVIEWED

18-A1-13

SKILLING, HELLE, CHRISTIANSEN, ROBERTSON — Structural & Civil Engineers

PROJECT THE WORLD TRADE CENTER | TITLE ANCHOR STRAPS - KEY PLAN - FLOOR 7 - TOWER B | DATE 10-1-69

REVISIONS

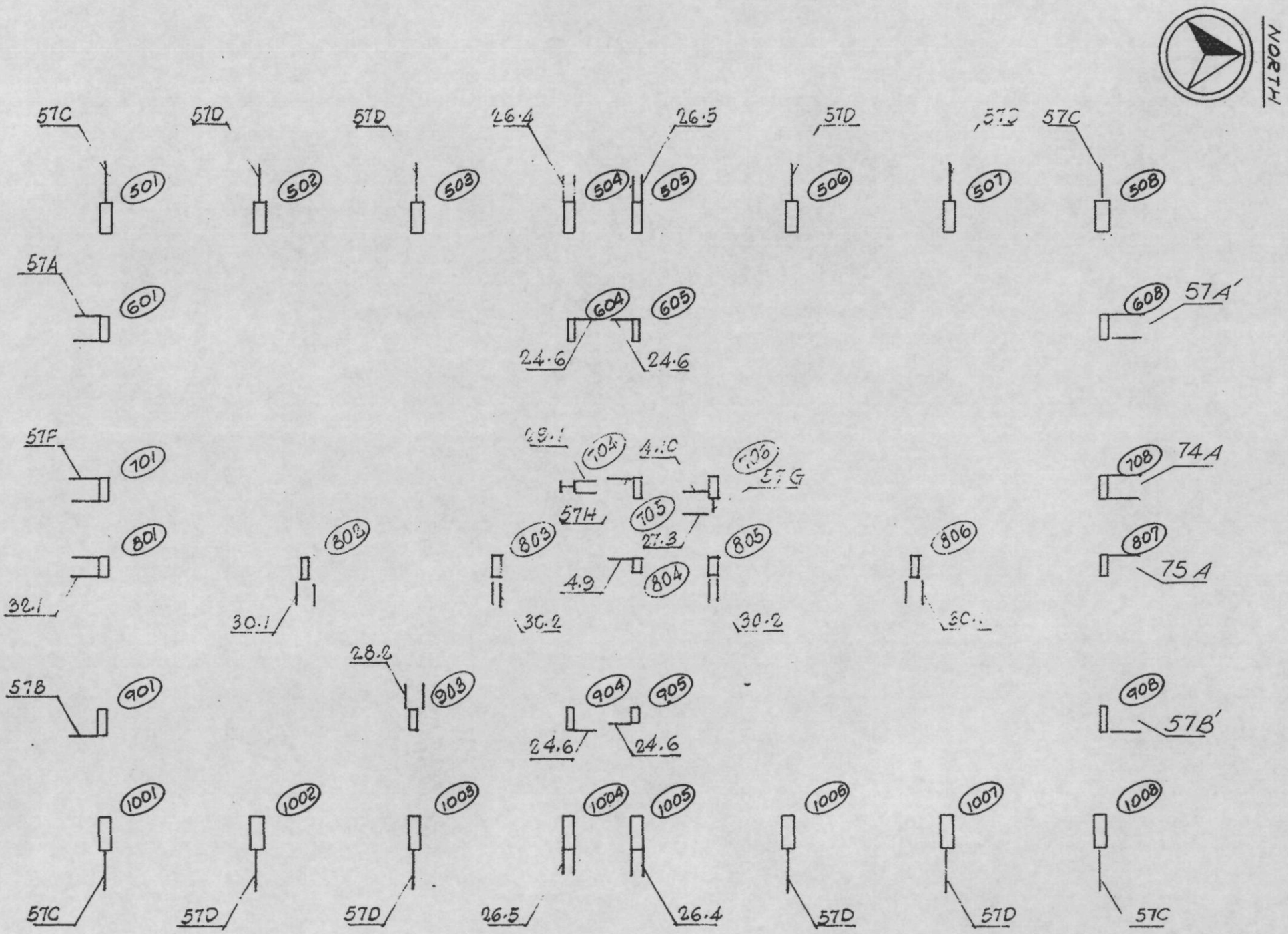

DESIGNED

DRAWN S.T.M.

REVIEWED

18-81-13.1

SKILLING, HELLE, CHRISTIANSEN, ROBERTSON — Structural & Civil Engineers

PROJECT THE WORLD TRADE CENTER | TITLE STRAP ANCHORS - KEY PLAN - FLOOR 9 - TOWER A | DATE 12-13-68

REVISIONS

NORTH

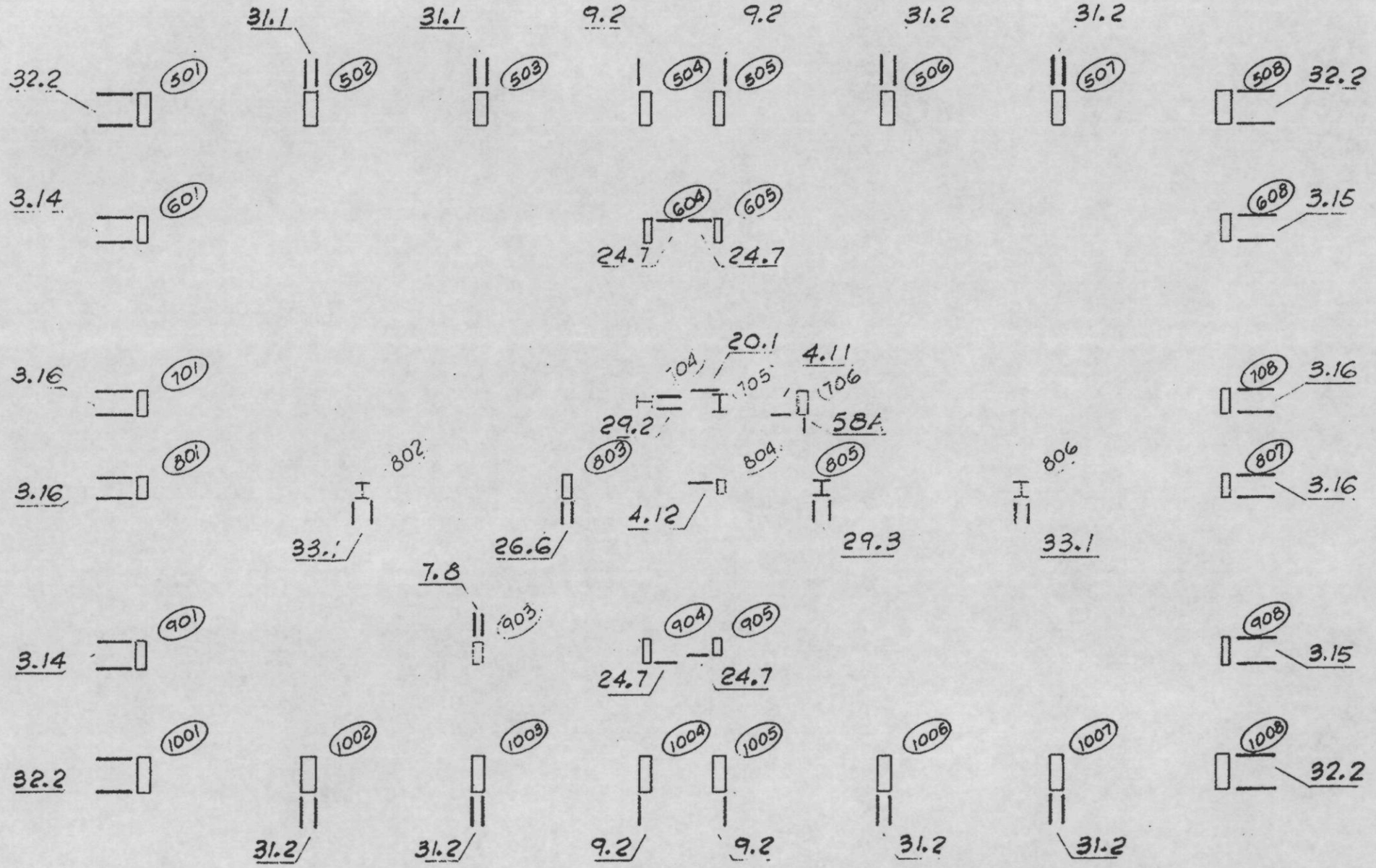

LICENSED PROFESSIONAL ENGINEER
LESLIE E. ROBERTSON
No. 34360
UNIVERSITY OF THE STATE OF NEW YORK

DESIGNED L. O'Neill

DRAWN S. Wexler

REVIEWED

18-A1-14

SKILLING, HELLE, CHRISTIANSEN, ROBERTSON — Structural & Civil Engineers

PROJECT THE WORLD TRADE CENTER | TITLE STRAP ANCHORS - KEY PLAN - FLOOR 9 - TOWER B | DATE 10-1-69

REVISIONS

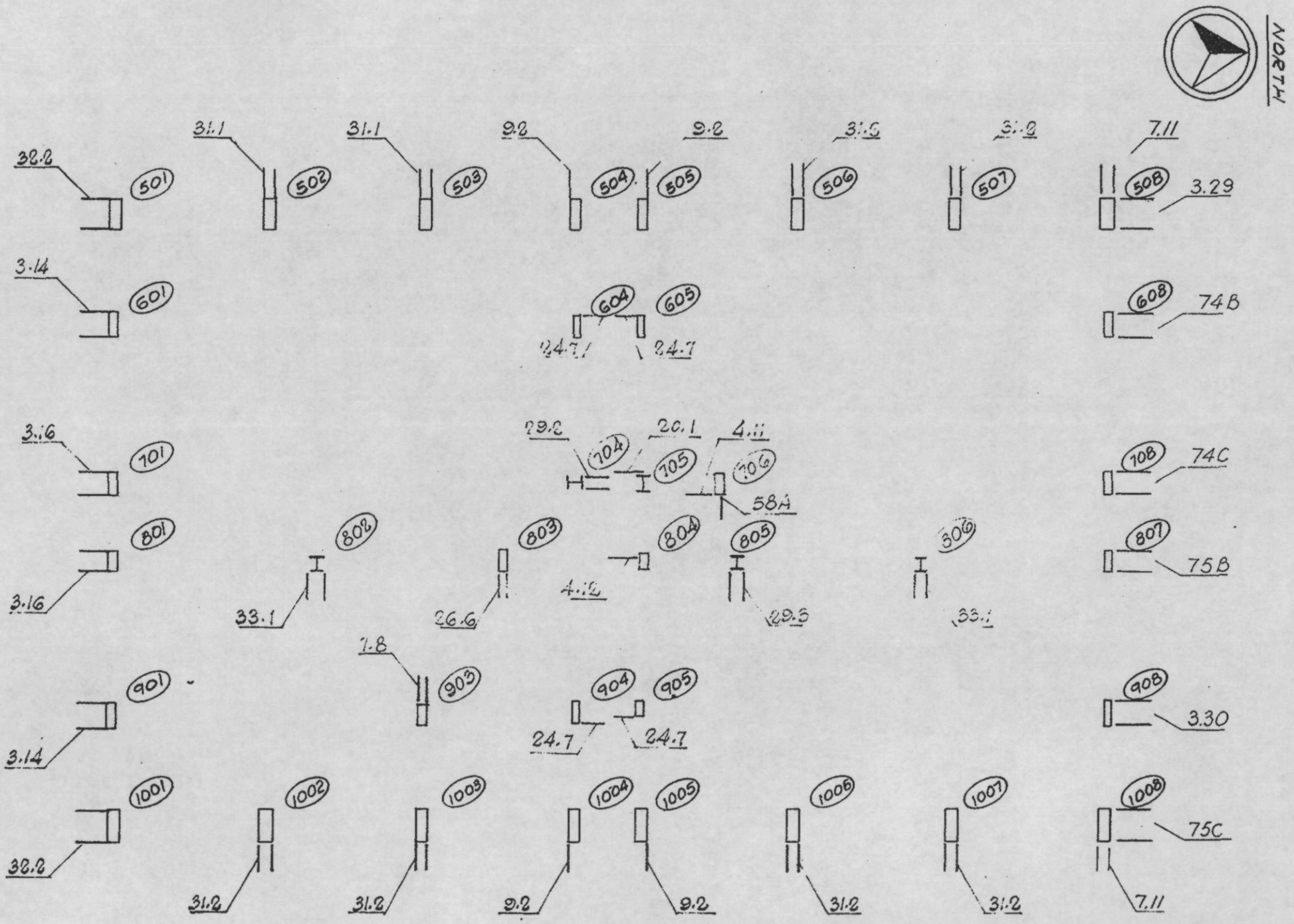

DESIGNED

DRAWN S.T.M.

REVIEWED

18-B.1-14.1

SKILLING, HELLE, CHRISTIANSEN, ROBERTSON — Structural & Civil Engineers

PROJECT THE WORLD TRADE CENTER | TITLE STRAP ANCHORS - KEY PLANS - FLOORS 10, 11 | DATE 2-7-69

REVISIONS

NORTH

TOWER A

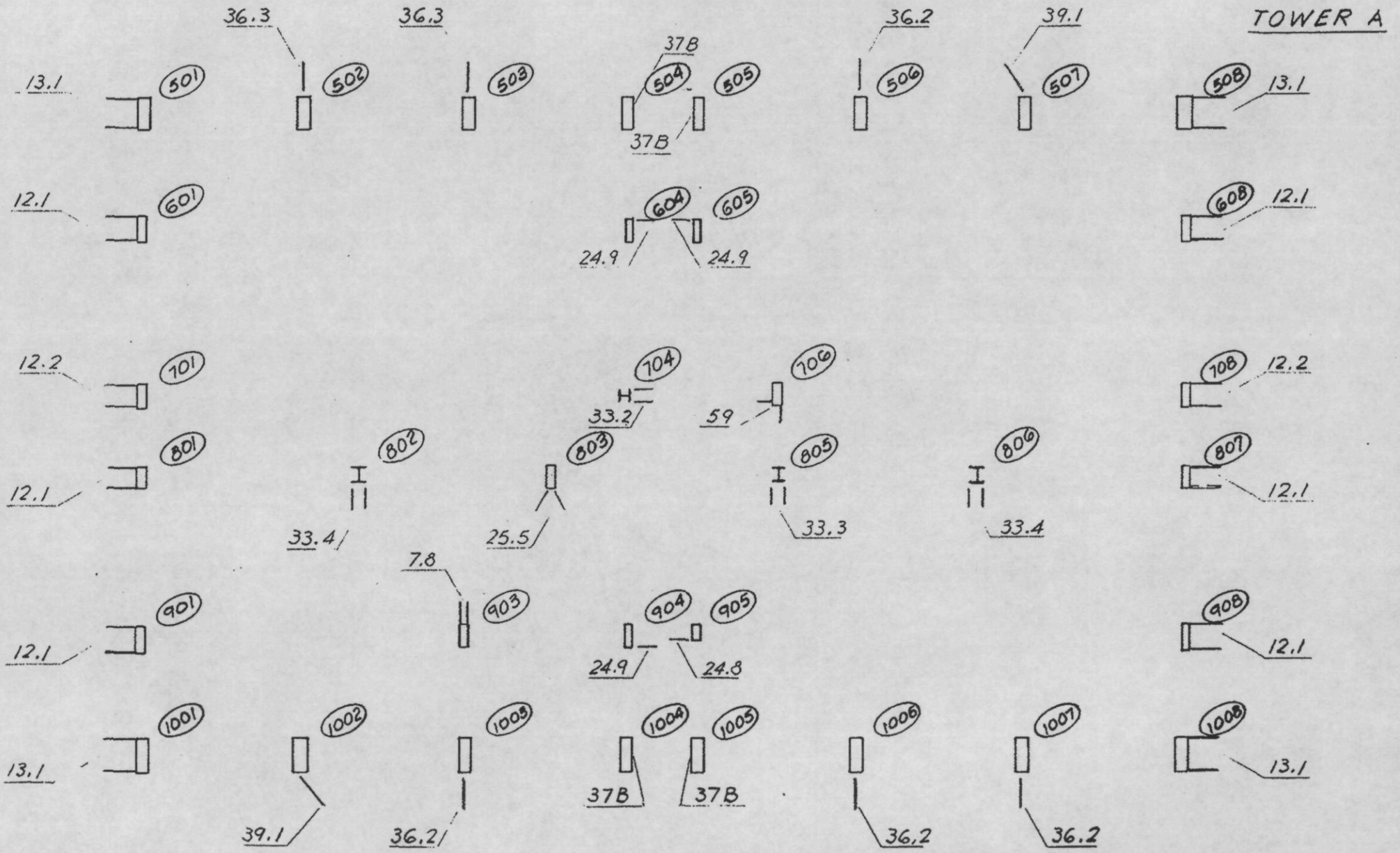

LICENSED PROFESSIONAL ENGINEER
LESLIE E. ROBERTSON
No. 34360
UNIVERSITY OF THE STATE OF NEW YORK

DESIGNED J. O'Neill

DRAWN F. Smith

REVIEWED W. Brewer

18 - A1 - 15.1

SKILLING, HELLE, CHRISTIANSEN, ROBERTSON — Structural & Civil Engineers

PROJECT: THE WORLD TRADE CENTER | TITLE: STRAP ANCHORS - KEY PLANS - FLOOR 10 | DATE: 10-1-69

REVISIONS

NORTH

TOWER B

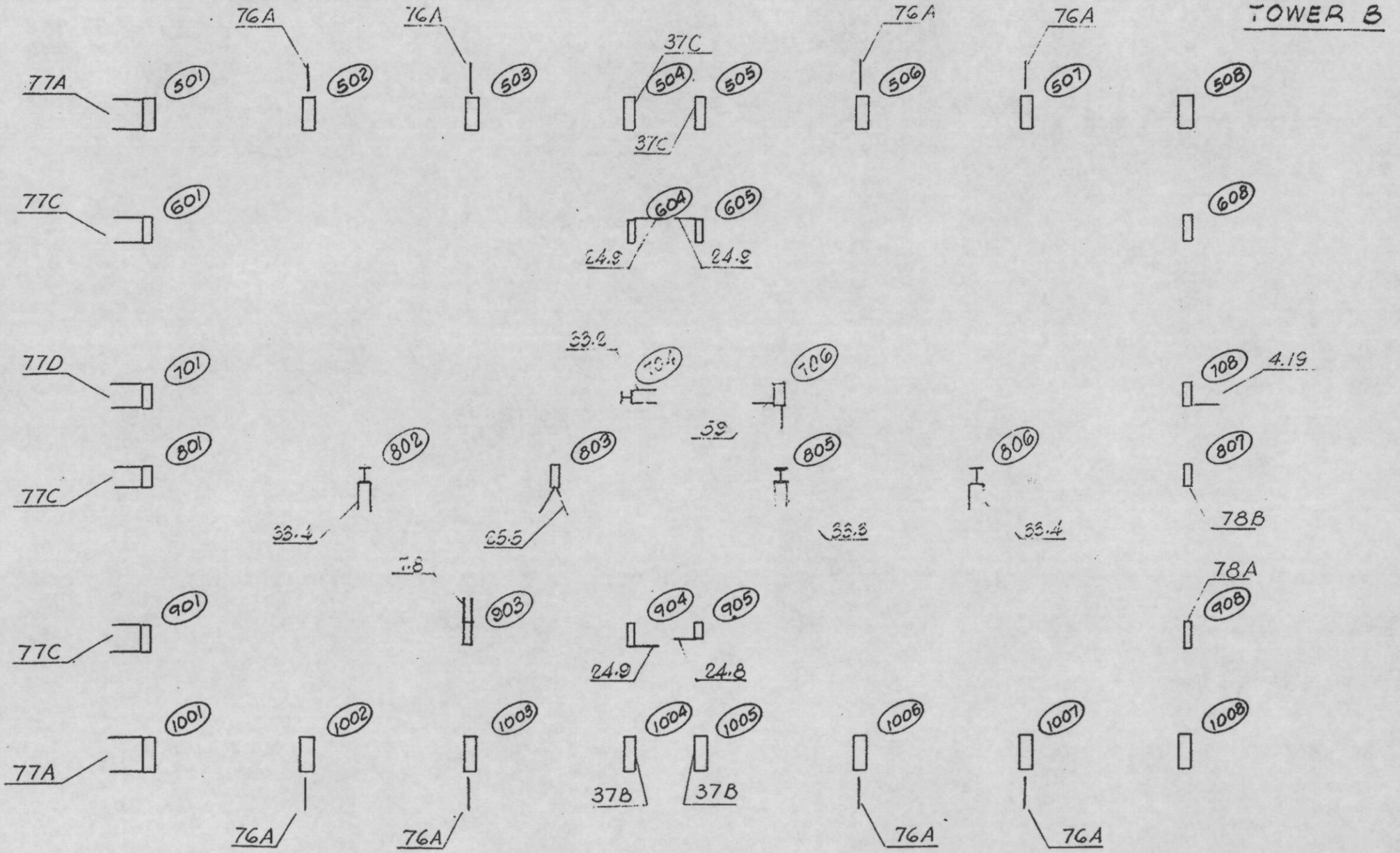

DESIGNED

DRAWN
S.T.M.

REVIEWED

18-B1-15.2

SKILLING, HELLE, CHRISTIANSEN, ROBERTSON — Structural & Civil Engineers

PROJECT: THE WORLD TRADE CENTER | TITLE: STRAP ANCHORS - KEY PLANS - FLOOR 11 | DATE: 10-1-69

REVISIONS

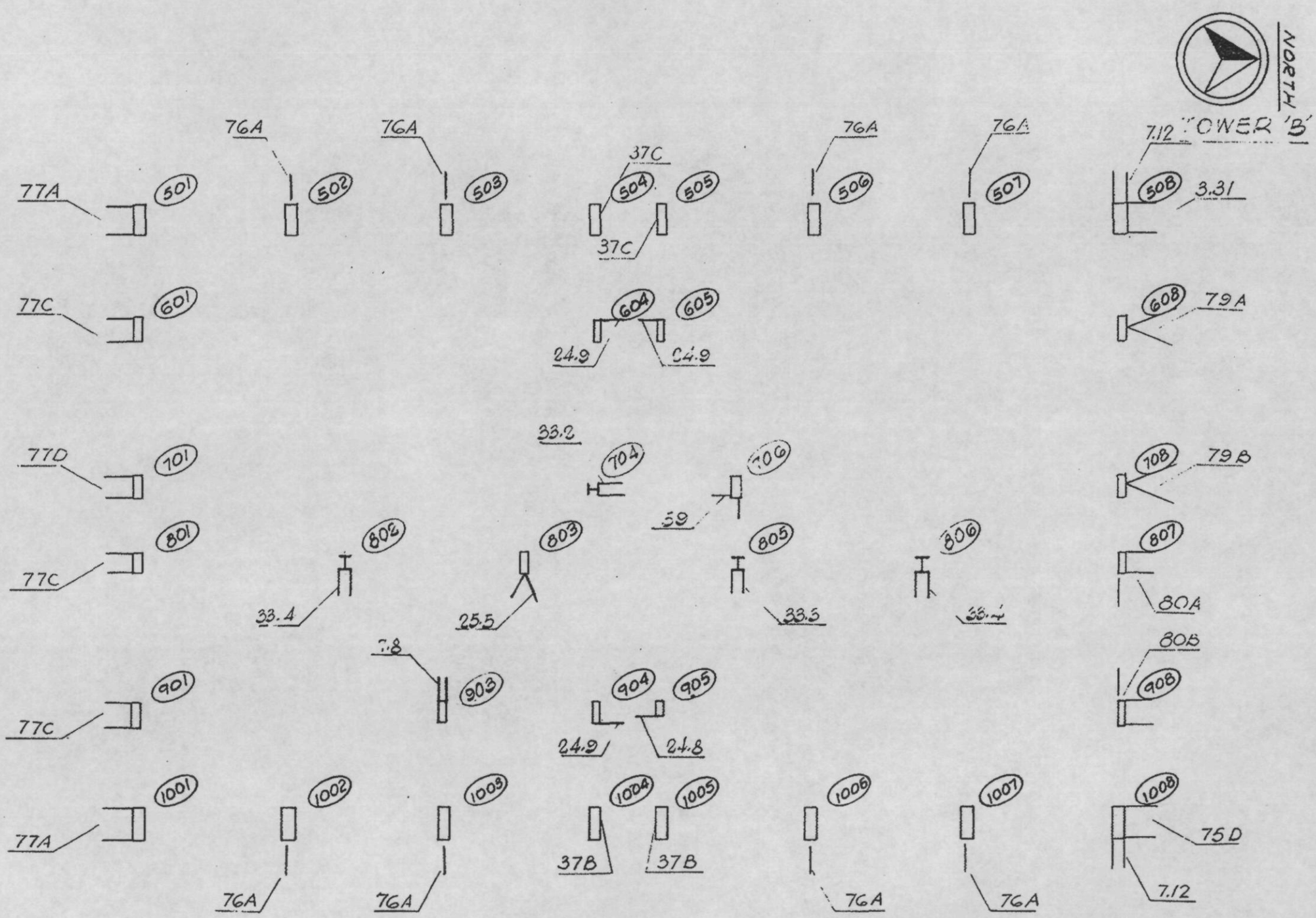

DESIGNED

DRAWN: S.T.M.

REVIEWED

18-51-15.3

SKILLING, HELLE, CHRISTIANSEN, ROBERTSON — Structural & Civil Engineers

PROJECT THE WORLD TRADE CENTER | TITLE STRAP ANCHORS-KEY PLANS-FLR.12-17 TOWER A-FLR.14-17 TOWER B | DATE 2-7-69

REVISIONS

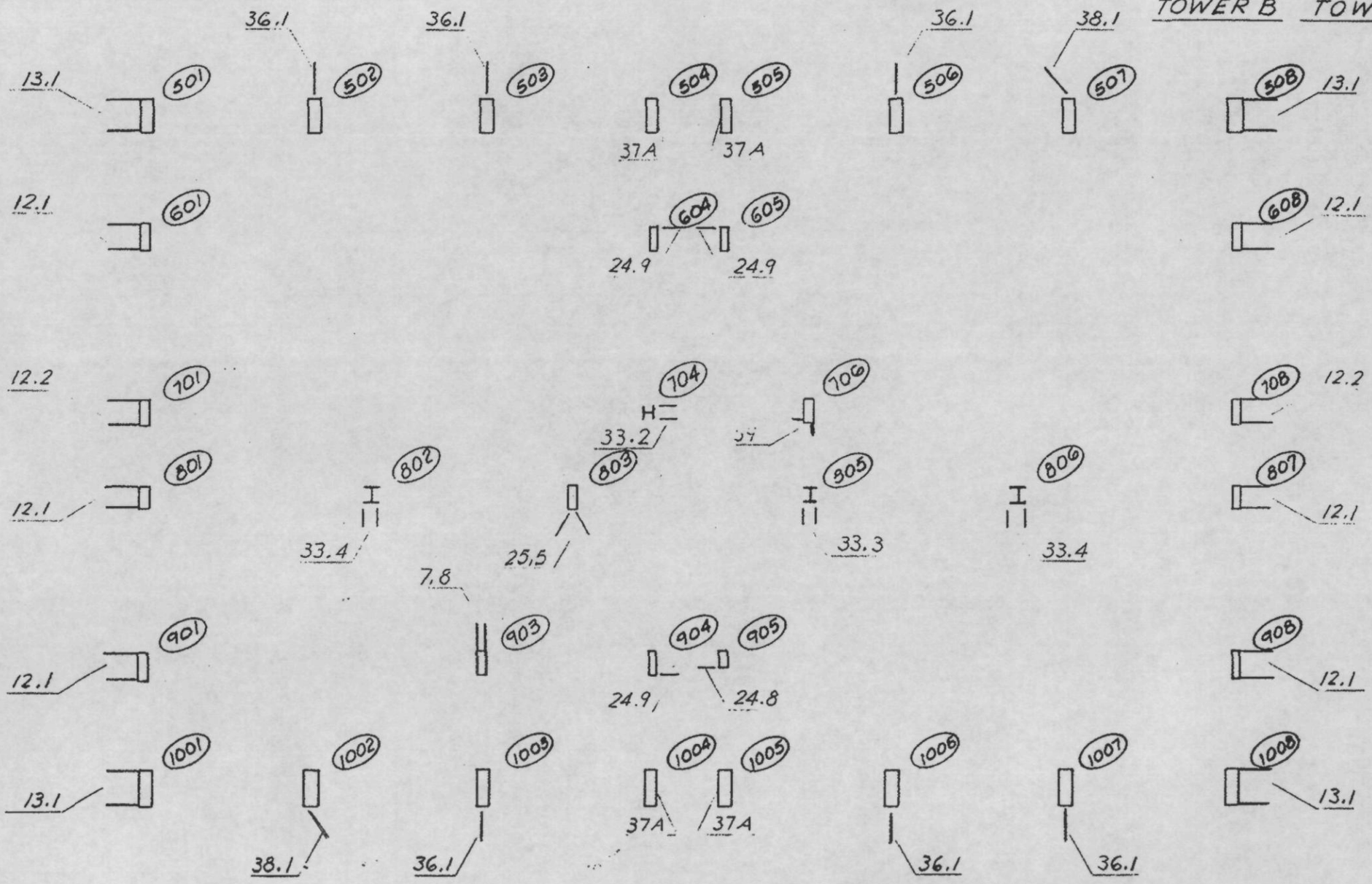

LICENSED PROFESSIONAL ENGINEER
LESLIE E. ROBERTSON
No. 34360
UNIVERSITY OF THE STATE OF NEW YORK

DESIGNED J. O'Neill
DRAWN F. Smith
REVIEWED W. Brewer

18-AB1-16.1

SKILLING, HELLE, CHRISTIANSEN, ROBERTSON — Structural & Civil Engineers

PROJECT: THE WORLD TRADE CENTER | TITLE: STRAP ANCHORS - KEY PLANS - FLOOR 12 | DATE: 10-1-69

REVISIONS

NORTH

TOWER 'B'

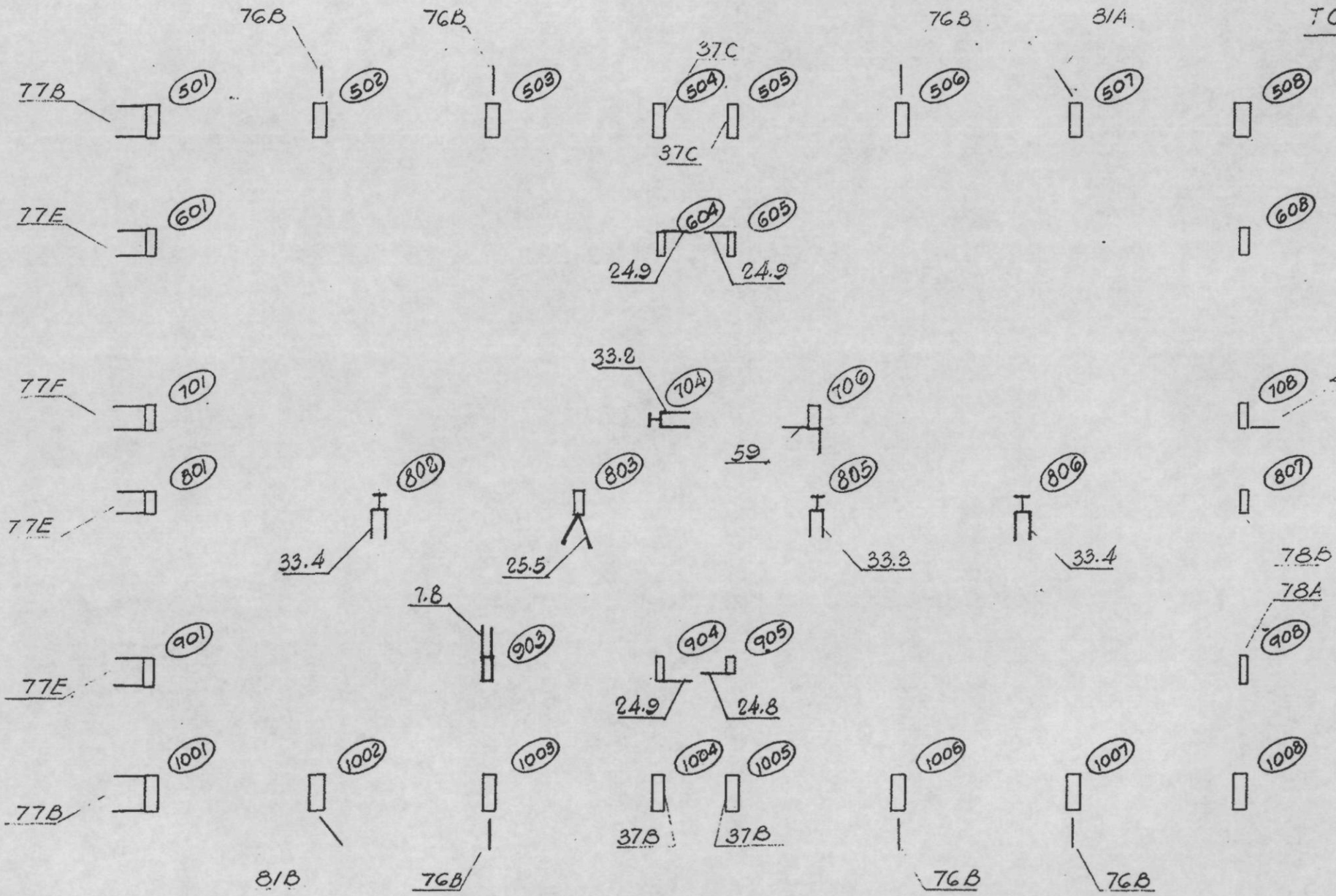

DESIGNED

DRAWN S.T.M.

REVIEWED

18-81-16.2

SKILLING, HELLE, CHRISTIANSEN, ROBERTSON — Structural & Civil Engineers

PROJECT THE WORLD TRADE CENTER | TITLE STRAP ANCHORS - KEY PLANS - FLOOR 13 | DATE 10-1-69

REVISIONS

NORTH

TOWER '8'

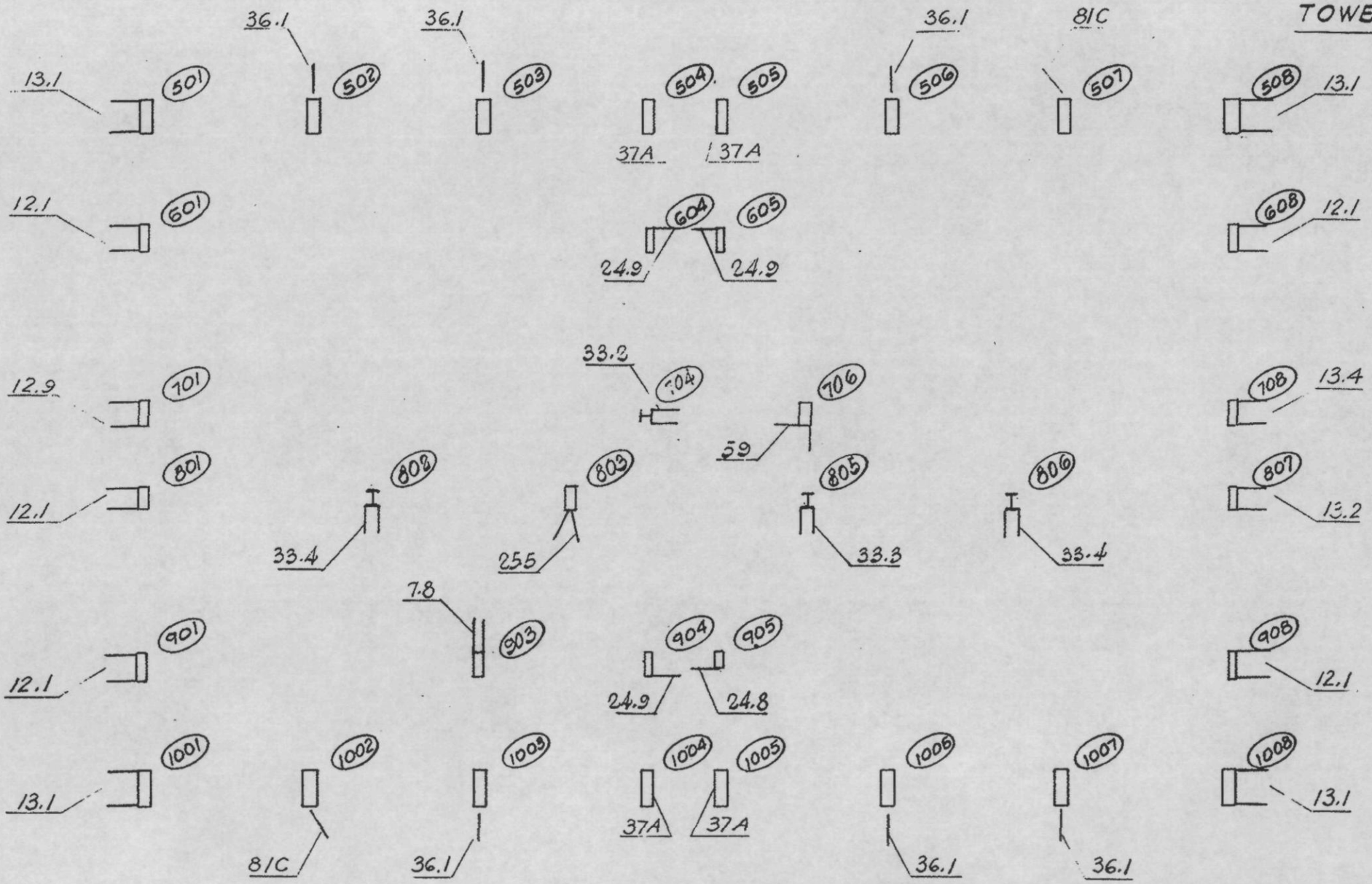

DESIGNED

DRAWN S.T.M.

REVIEWED

18-81-16.3

SKILLING, HELLE, CHRISTIANSEN, ROBERTSON — Structural & Civil Engineers

PROJECT THE WORLD TRADE CENTER | TITLE STRAP ANCHORS - KEY PLANS - FLOOR 19 | DATE 2-7-69

REVISIONS

NORTH

NORTH

TOWER B

TOWER A

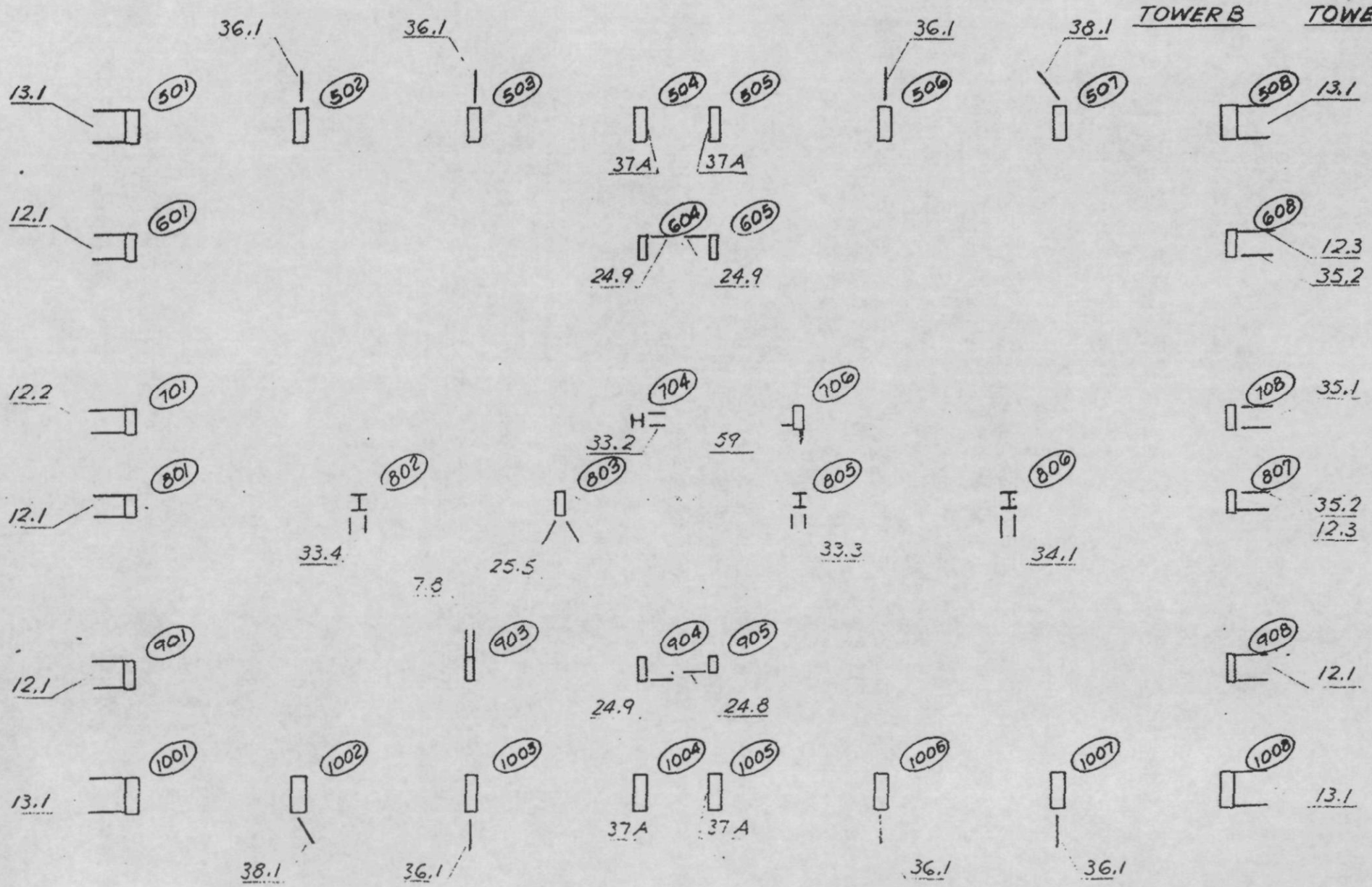

LICENSED PROFESSIONAL ENGINEER
LESLIE E. ROBERTSON
No. 34360
CITY OF THE STATE OF NEW YORK

SIGNED

DRAWN F. Smith

REVIEWED

18-AB1-17

SKILLING, HELLE, CHRISTIANSEN, ROBERTSON — Structural & Civil Engineers

PROJECT: THE WORLD TRADE CENTER | TITLE: STRAP ANCHORS - KEY PLANS - FLOORS 19 - 26 | DATE: 2-7-69

REVISIONS

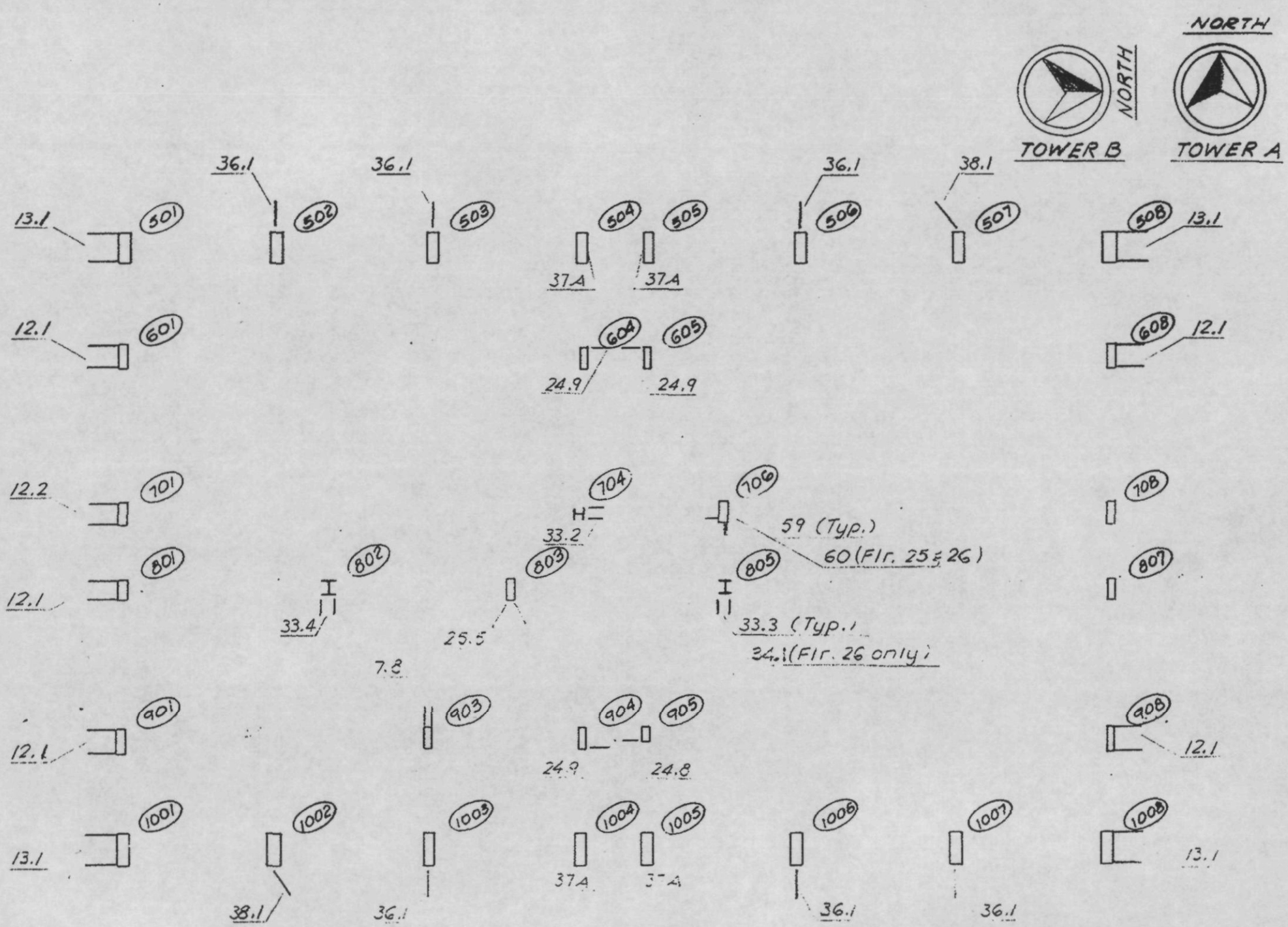

LICENSED PROFESSIONAL ENGINEER
LESLIE E. ROBERTSON
No. 34360
CITY OF THE STATE OF NEW YORK

DRAWN: F. Smith

REVIEWED: D. Brewer

18-AB.-18

SKILLING, HELLE, CHRISTIANSEN, ROBERTSON — Structural & Civil Engineers

PROJECT: THE WORLD TRADE CENTER | TITLE: STRAP ANCHORS - KEY PLANS - FLOORS 27-33 | DATE: 2-7-69

REVISIONS

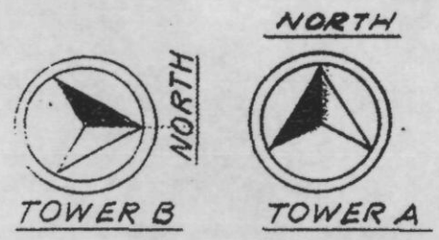

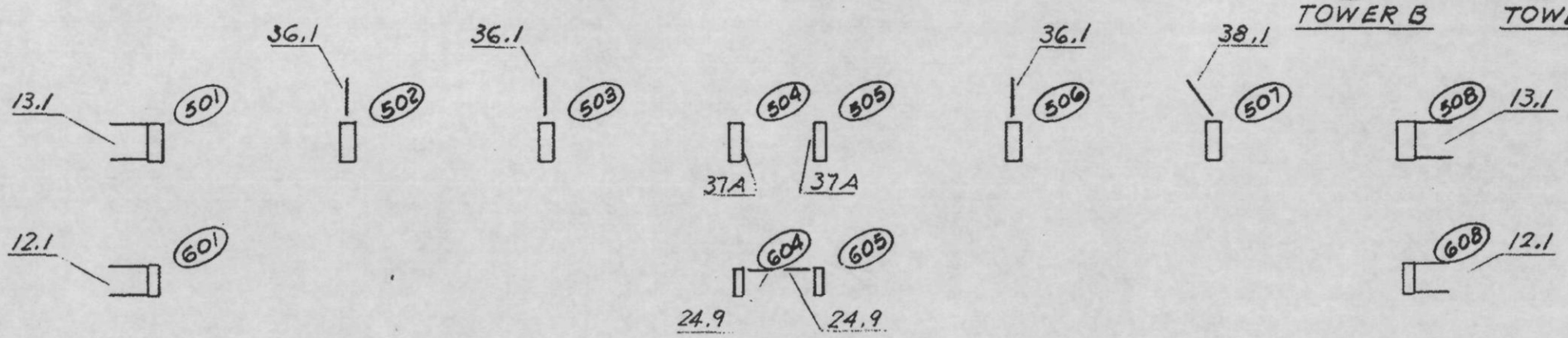

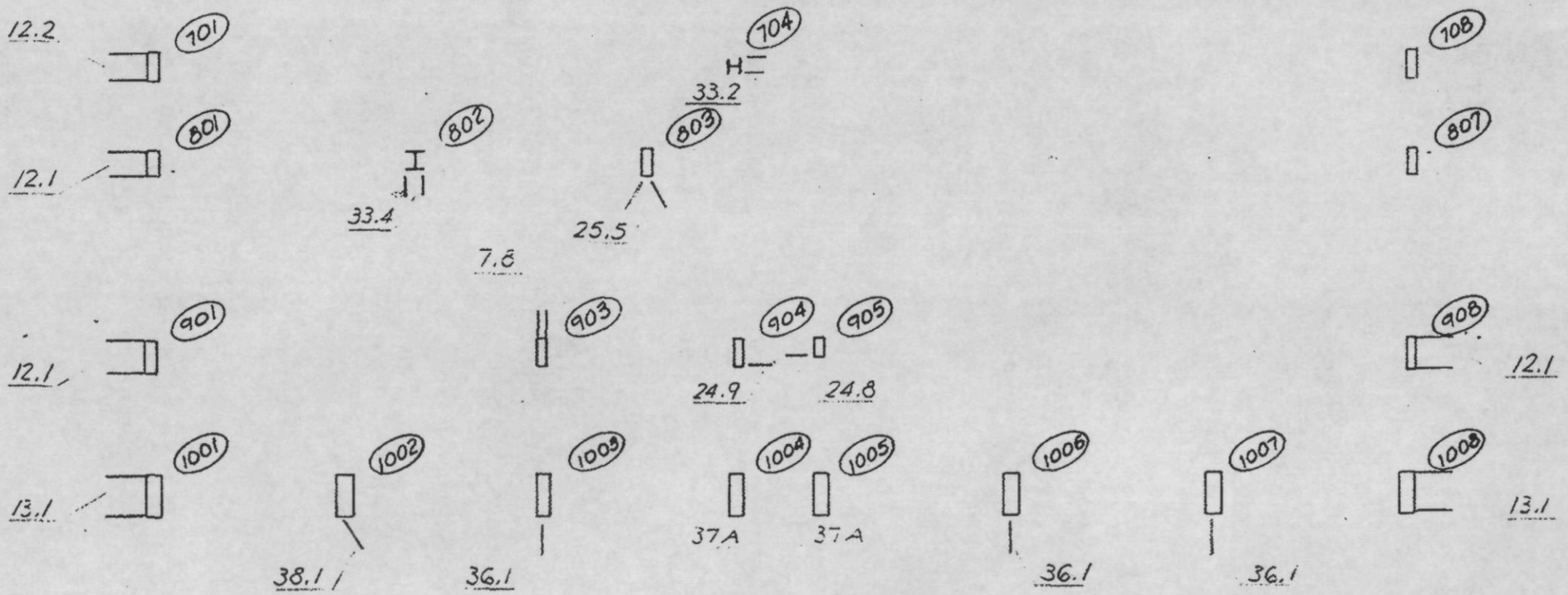

LICENSED PROFESSIONAL ENGINEER
LESLIE E. ROBERTSON
No. 34360
STATE OF THE STATE

ED
J. O'Neill
DRAWN
F. Smith
REVIEWED
W. Brewer

18 - AB1 - 19

SKILLING, HELLE, CHRISTIANSEN, ROBERTSON — Structural & Civil Engineers

PROJECT: THE WORLD TRADE CENTER | TITLE: STRAP ANCHORS - KEY PLANS - FLOOR 34 | DATE: 2-7-69

REVISIONS

NORTH

TOWER B

TOWER A

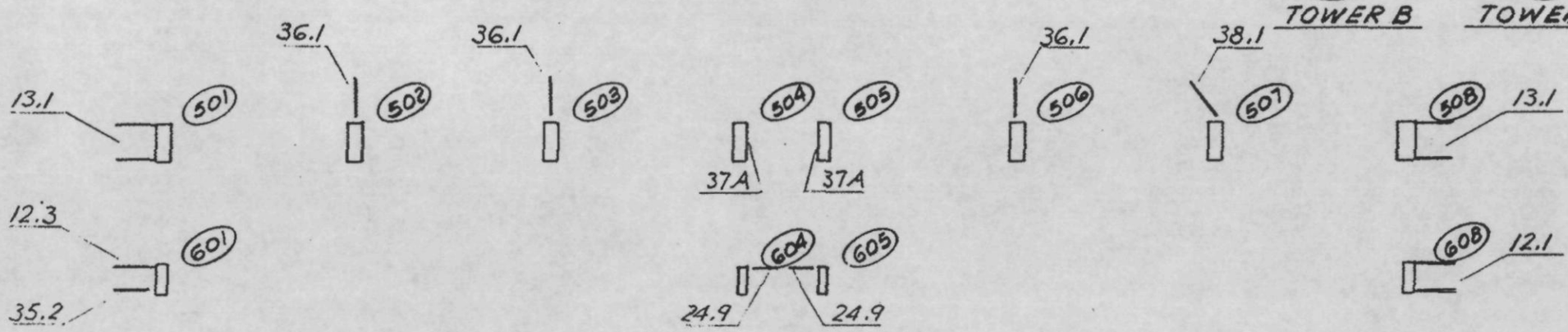

LICENSED PROFESSIONAL ENGINEER
LESLIE E. ROBERTSON
No. 34360
UNIVERSITY OF THE STATE OF NEW YORK

CHECKED
J. O'Neill

DRAWN
F. Smith

REVIEWED
D. Brewer

1E - AB1 - 20

SKILLING, HELLE, CHRISTIANSEN, ROBERTSON — Structural & Civil Engineers

PROJECT: THE WORLD TRADE CENTER | TITLE: STRAP ANCHORS - KEY PLANS - FLOORS 35-38 | DATE: 2-7-69

REVISIONS

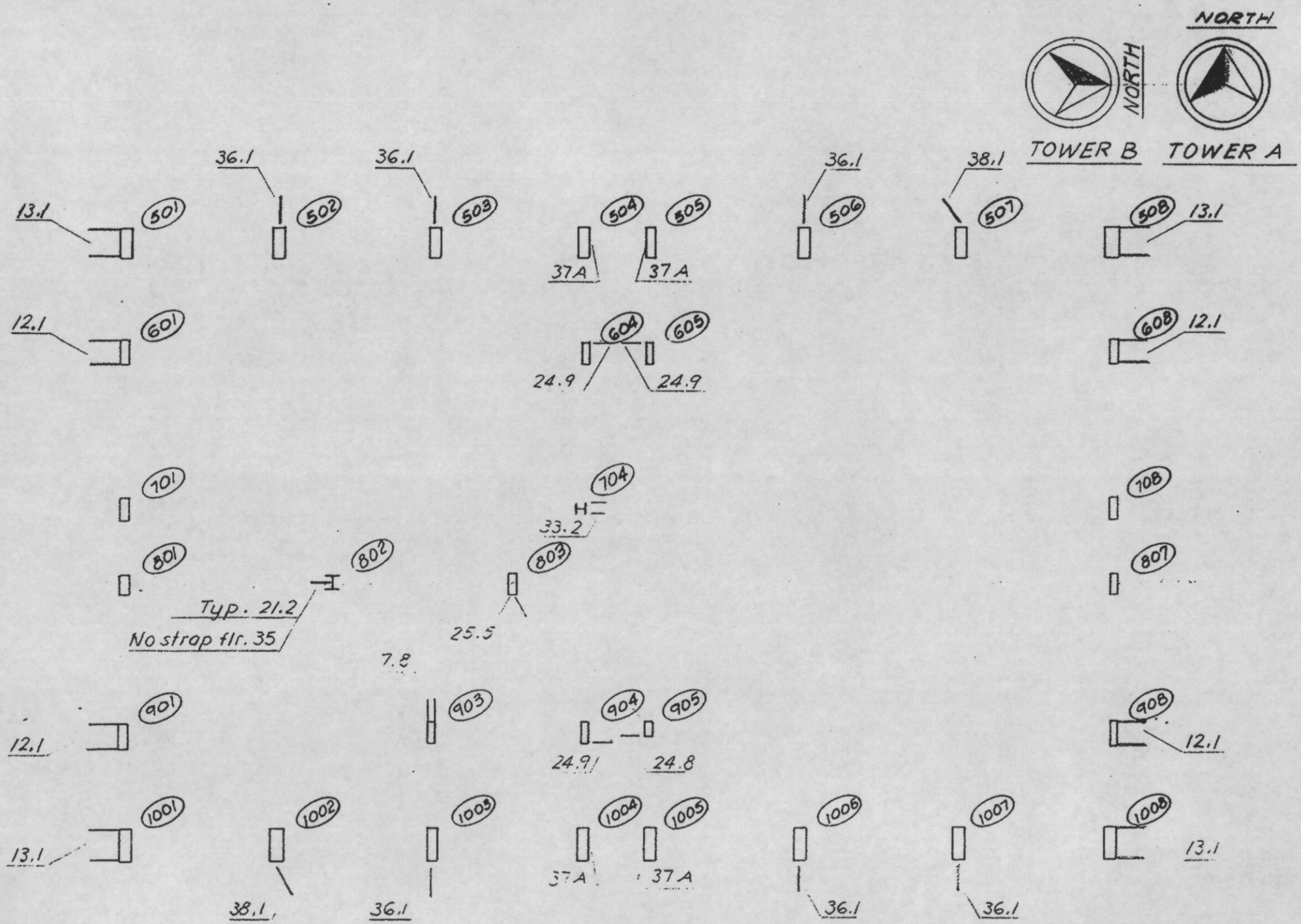

LICENSED PROFESSIONAL ENGINEER
LESLIE E. ROBERTSON
No. 34360
UNIVERSITY OF THE STATE OF NEW YORK

ED
Neill

DRAWN
Smith

REVIEWED
W. Brewer

18-AB1-21

SKILLING, HELLE, CHRISTIANSEN, ROBERTSON — Structural & Civil Engineers

PROJECT THE WORLD TRADE CENTER | TITLE STRAP ANCHORS - KEY PLANS - FLOOR 39 & 40 | DATE 2-7-69

REVISIONS

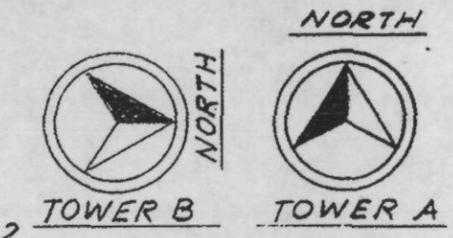

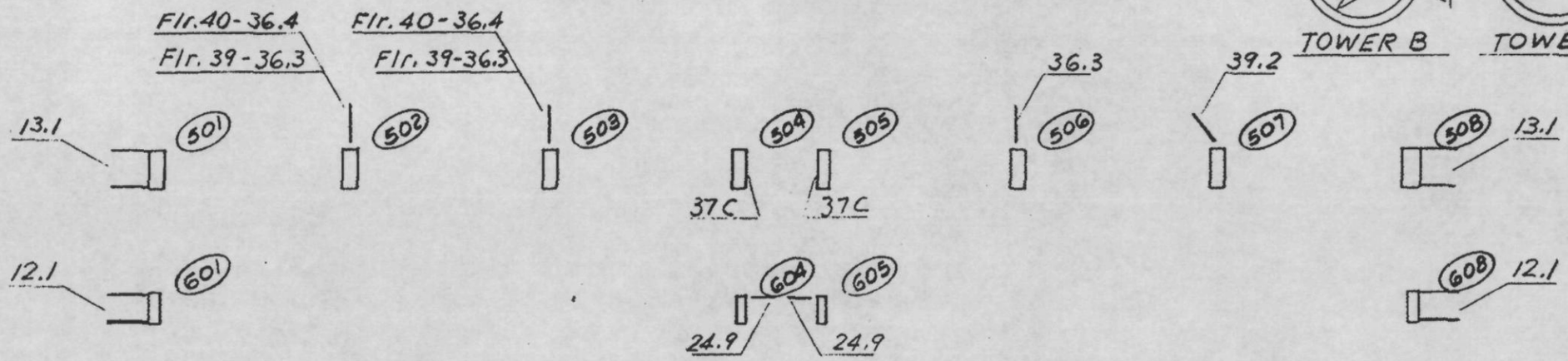

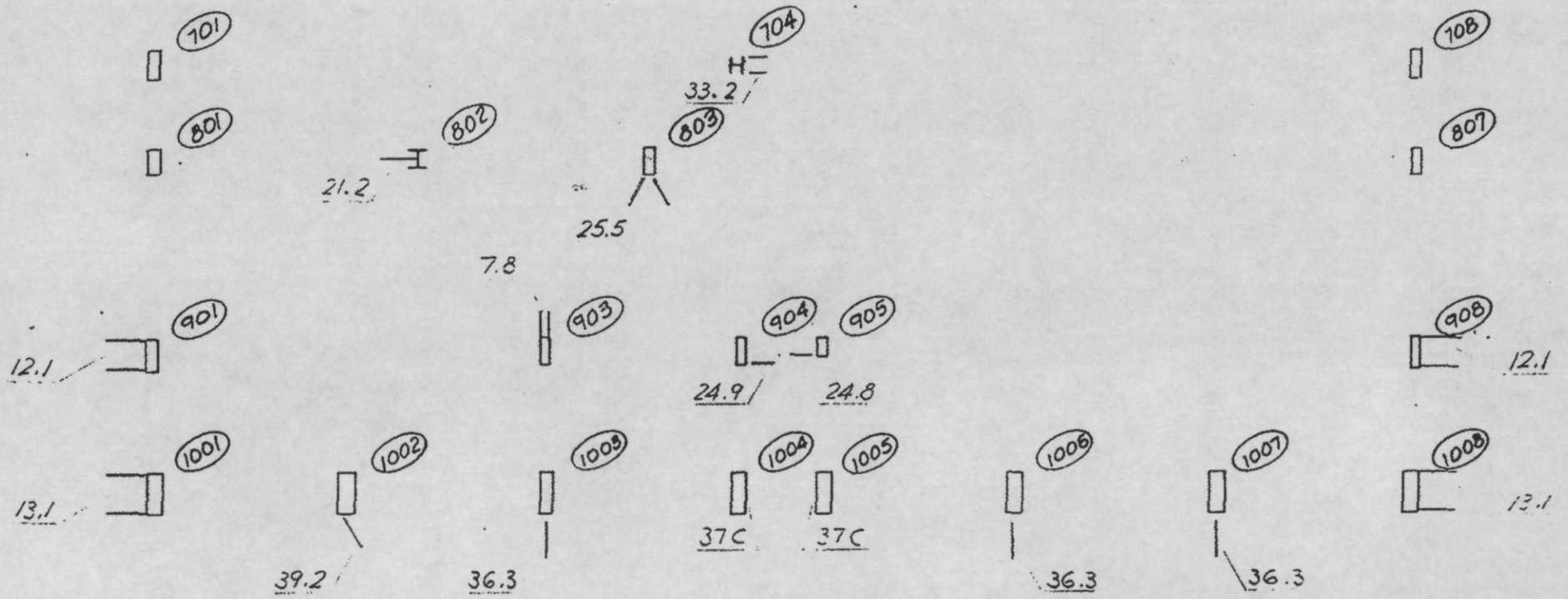

LICENSED PROFESSIONAL ENGINEER
LESLIE E. ROBERTSON
No. 34360
UNIVERSITY OF THE STATE OF NEW YORK

SIGNED
L. E. Robertson

DRAWN
F. Smith

REVIEWED
W. Brewer

18 - AE1 - 22

SKILLING, HELLE, CHRISTIANSEN, ROBERTSON — Structural & Civil Engineers

PROJECT THE WORLD TRADE CENTER | TITLE STRAP ANCHORS - KEY PLANS - FLOOR 41 | DATE 5-28-69

REVISIONS

NORTH

Tower B — NORTH — Tower A

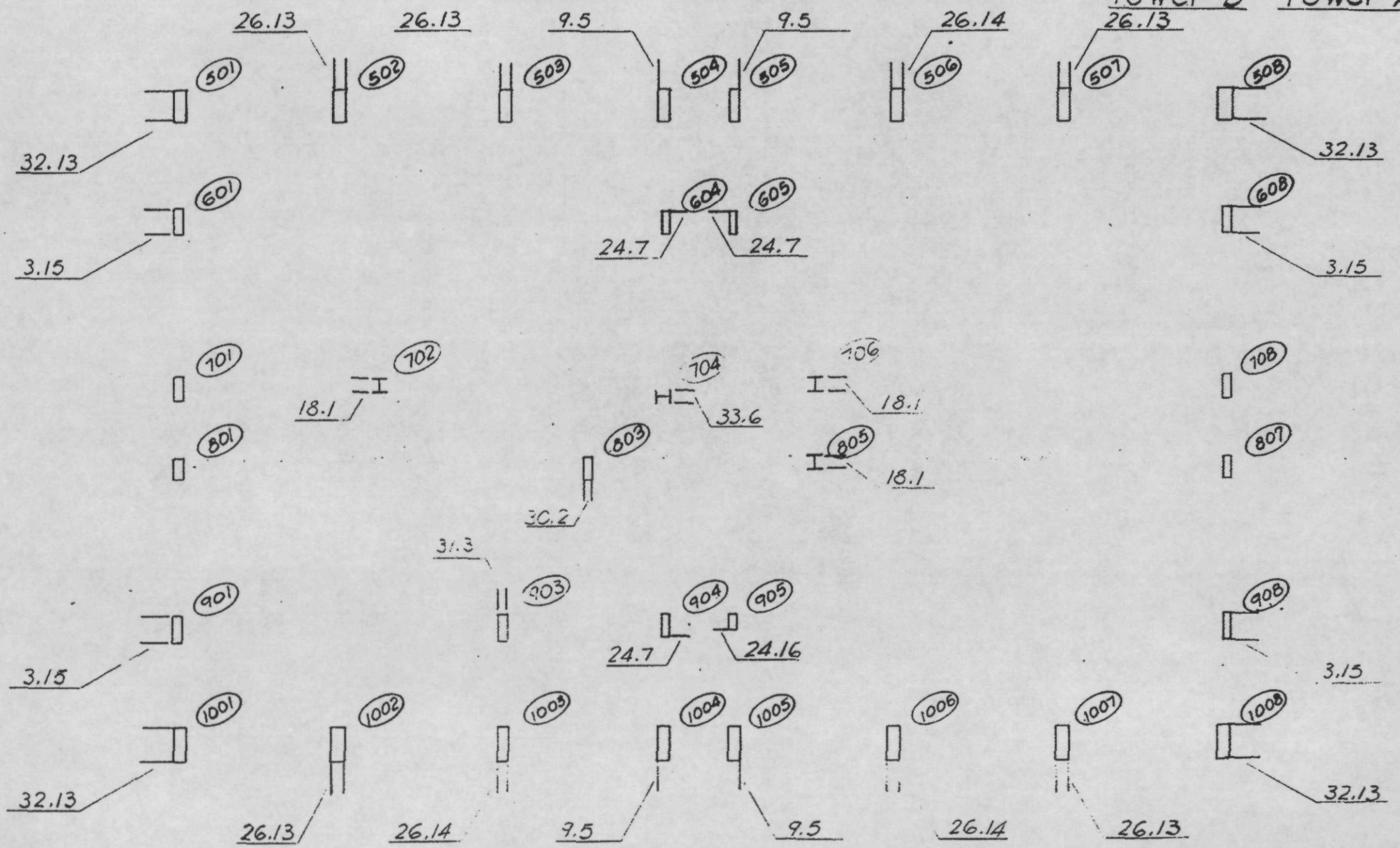

LICENSED PROFESSIONAL ENGINEER
LESLIE E. ROBERTSON
No. 34360
THE UNIVERSITY OF THE STATE OF NEW YORK

SIGNED

DRAWN

REVIEWED

18-48.1-23

SKILLING, HELLE, CHRISTIANSEN, ROBERTSON — Structural & Civil Engineers

PROJECT THE WORLD TRADE CENTER | TITLE KEY PLAN FOR ANCHOR STRAPS - FLOOR 43 | DATE 5-28-69

REVISIONS

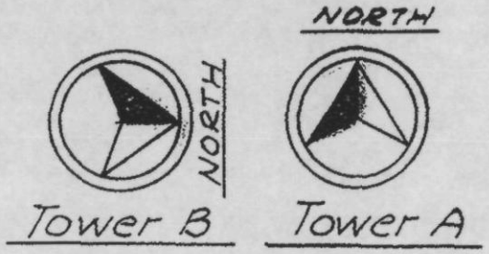

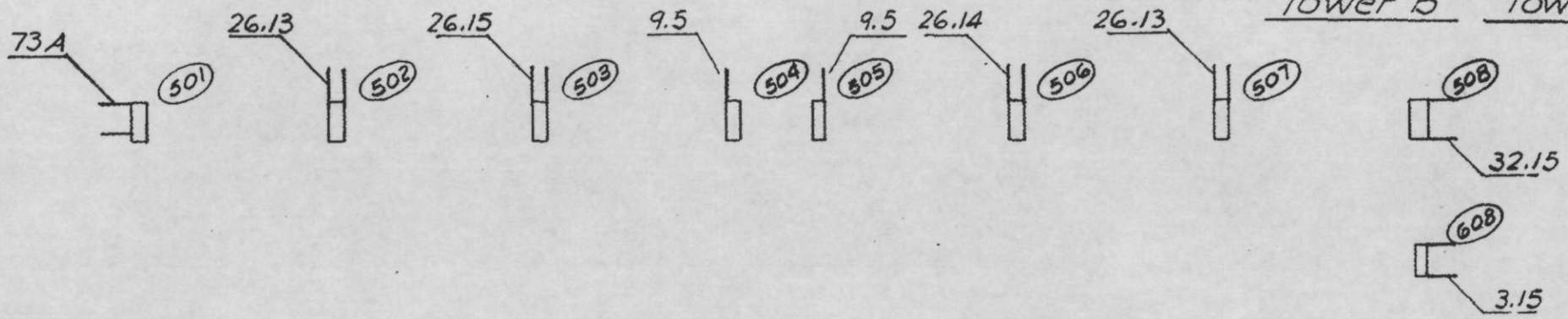

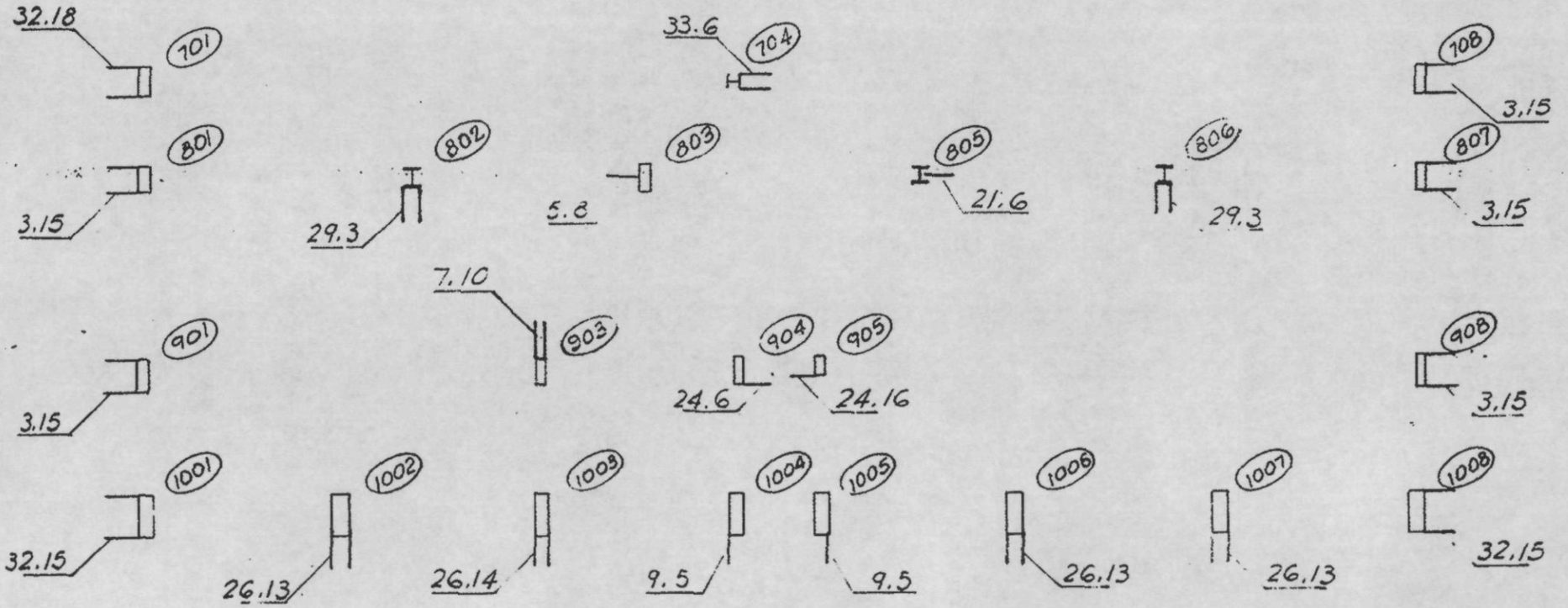

LICENSED PROFESSIONAL ENGINEER
LESLIE E. ROBERTSON
No. 34360
CITY OF THE STATE OF NEW YORK

SIGNED

DRAWN

REVIEWED

18-48.-24

SKILLING, HELLE, CHRISTIANSEN, ROBERTSON — Structural & Civil Engineers

PROJECT THE WORLD TRADE CENTER | TITLE KEY PLAN FOR ANCHOR STRAPS- FLOOR 44 | DATE 4-30-69

REVISIONS

5-28-69

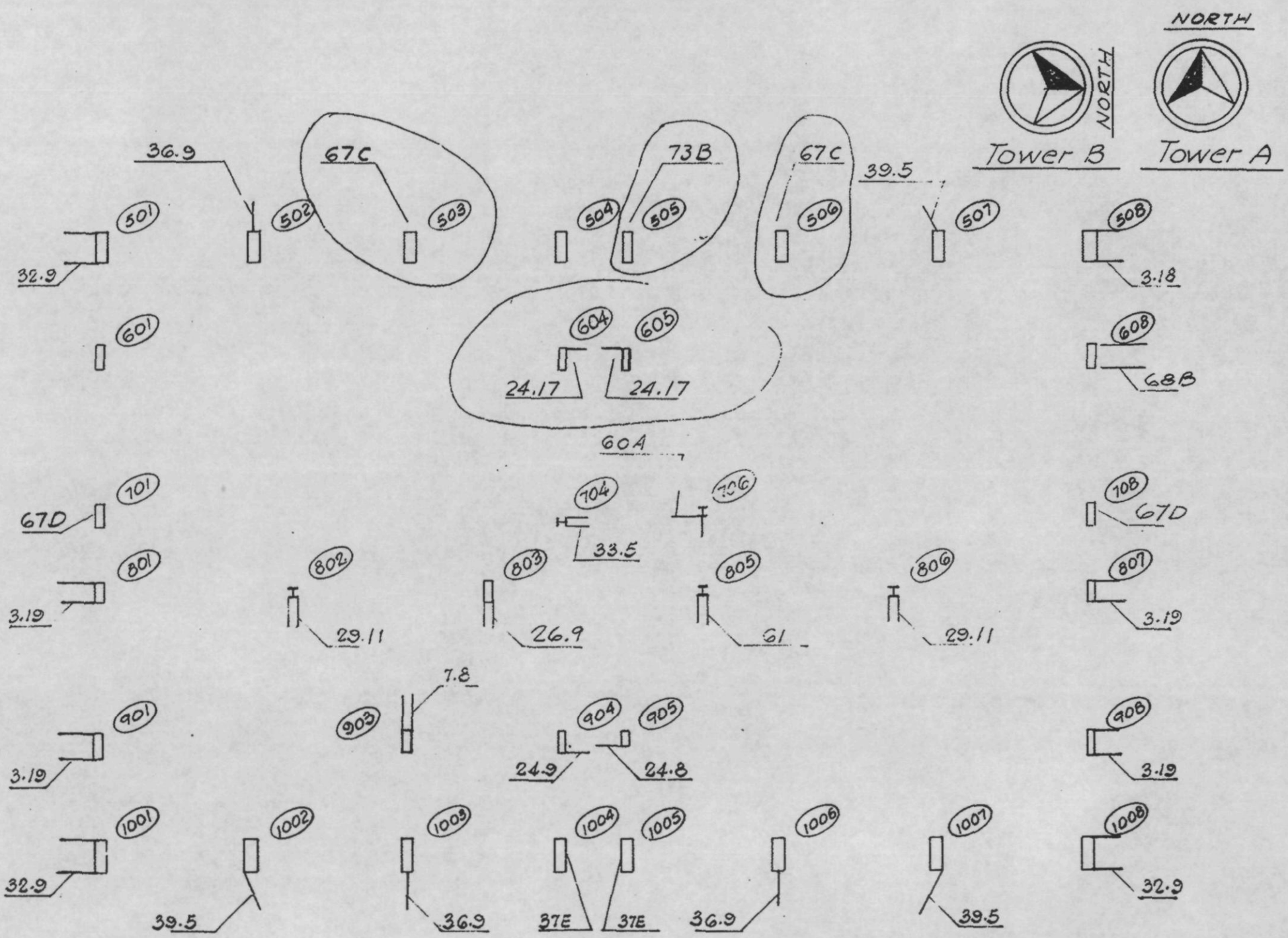

LICENSED PROFESSIONAL ENGINEER
LESLIE E. ROBERTSON
No. 34360
UNIVERSITY OF THE STATE OF NEW YORK

DESIGNED

DRAWN S.T.M.

REVIEWED W. Brewer

18-AB1-25

SKILLING, HELLE, CHRISTIANSEN, ROBERTSON — Structural & Civil Engineers

PROJECT THE WORLD TRADE CENTER | TITLE KEY PLAN FOR ANCHOR STRAPS- FLOOR 45 | DATE 4-30-69

EVISIONS

5-28-69

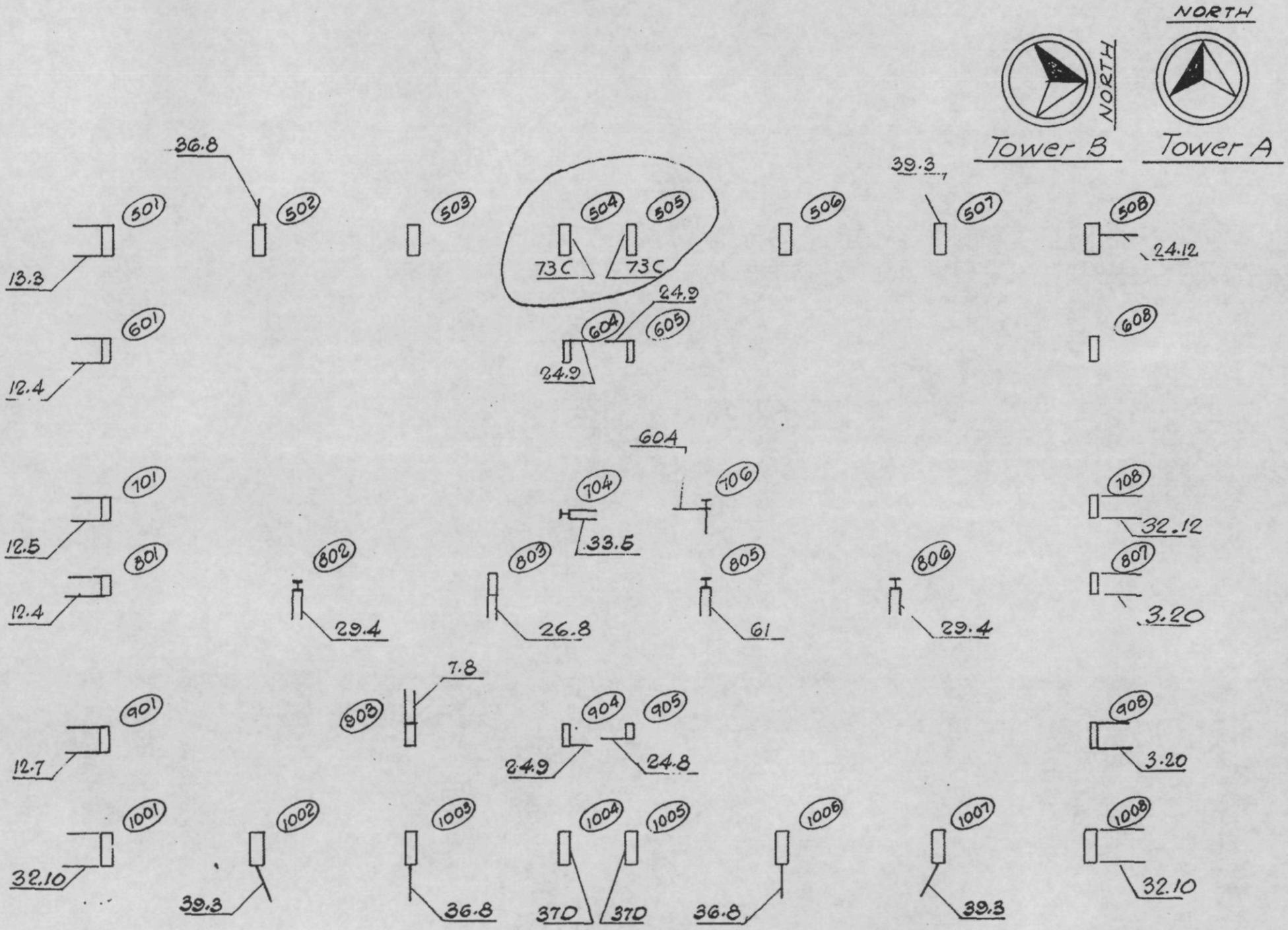

LICENSED PROFESSIONAL ENGINEER
LESLIE E. ROBERTSON
No. 34360
UNIVERSITY OF THE STATE OF NEW YORK

DESIGNED

DRAWN S.T.M.

REVIEWED W. Brewer

18-AB1-26

SKILLING, HELLE, CHRISTIANSEN, ROBERTSON — Structural & Civil Engineers

PROJECT THE WORLD TRADE CENTER | TITLE KEY PLAN FOR ANCHOR STRAPS- FLOOR 46 | DATE 4-30-69

REVISIONS

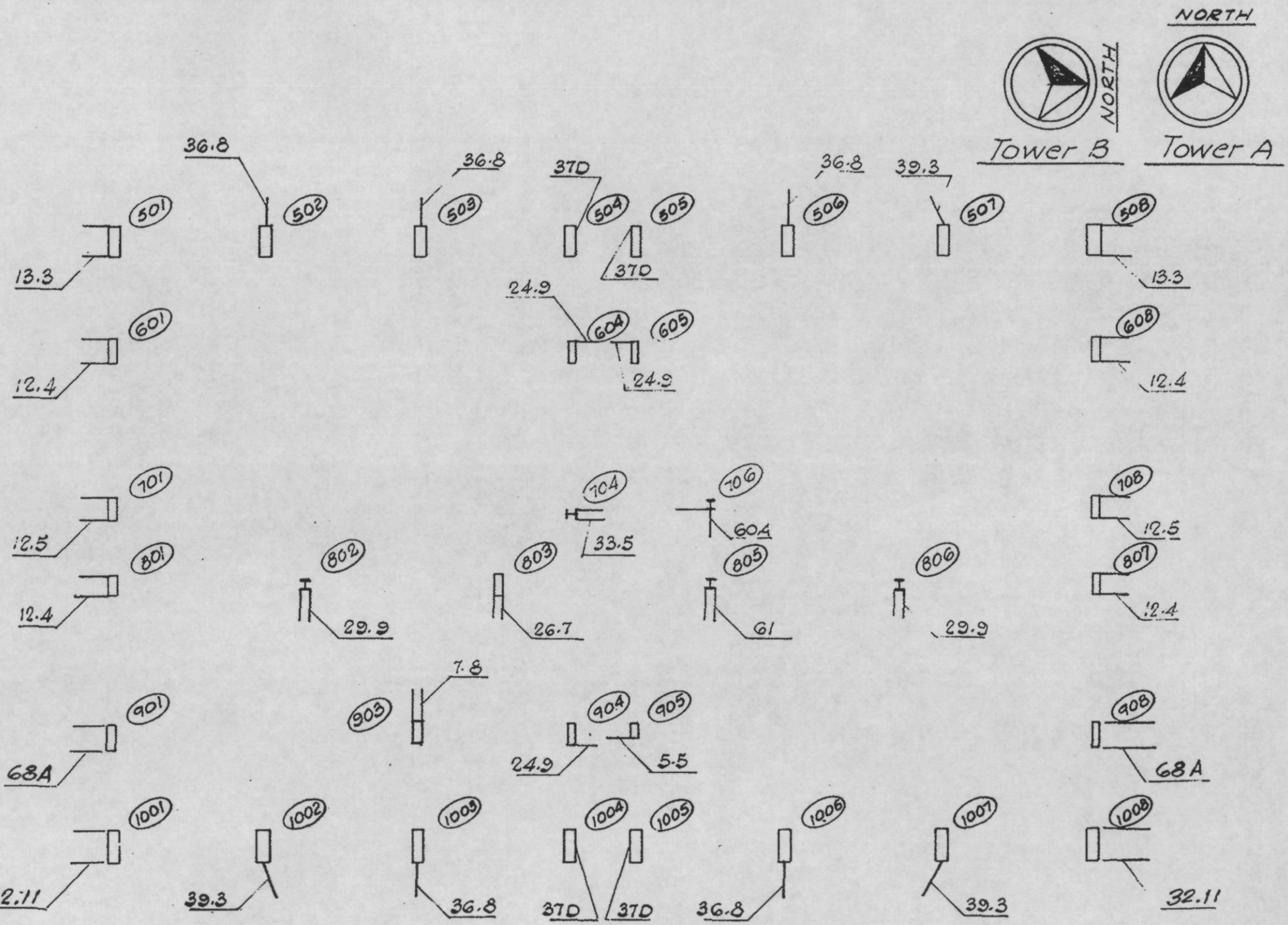

LICENSED PROFESSIONAL ENGINEER
LESLIE E. ROBERTSON
No. 34360
UNIVERSITY OF THE STATE OF NEW YORK

SIGNED

DRAWN STM

REVIEWED W. Brewer

18-AB1-27

SKILLING, HELLE, CHRISTIANSEN, ROBERTSON — Structural & Civil Engineers

PROJECT THE WORLD TRADE CENTER | TITLE KEY PLAN FOR ANCHOR STRAPS- FLOOR 47 | DATE 4-30-69

REVISIONS

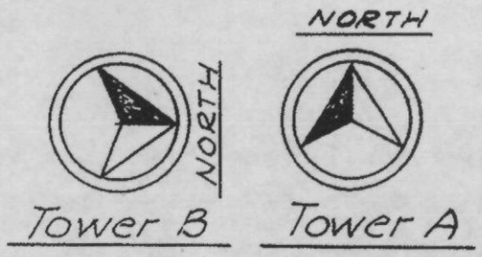

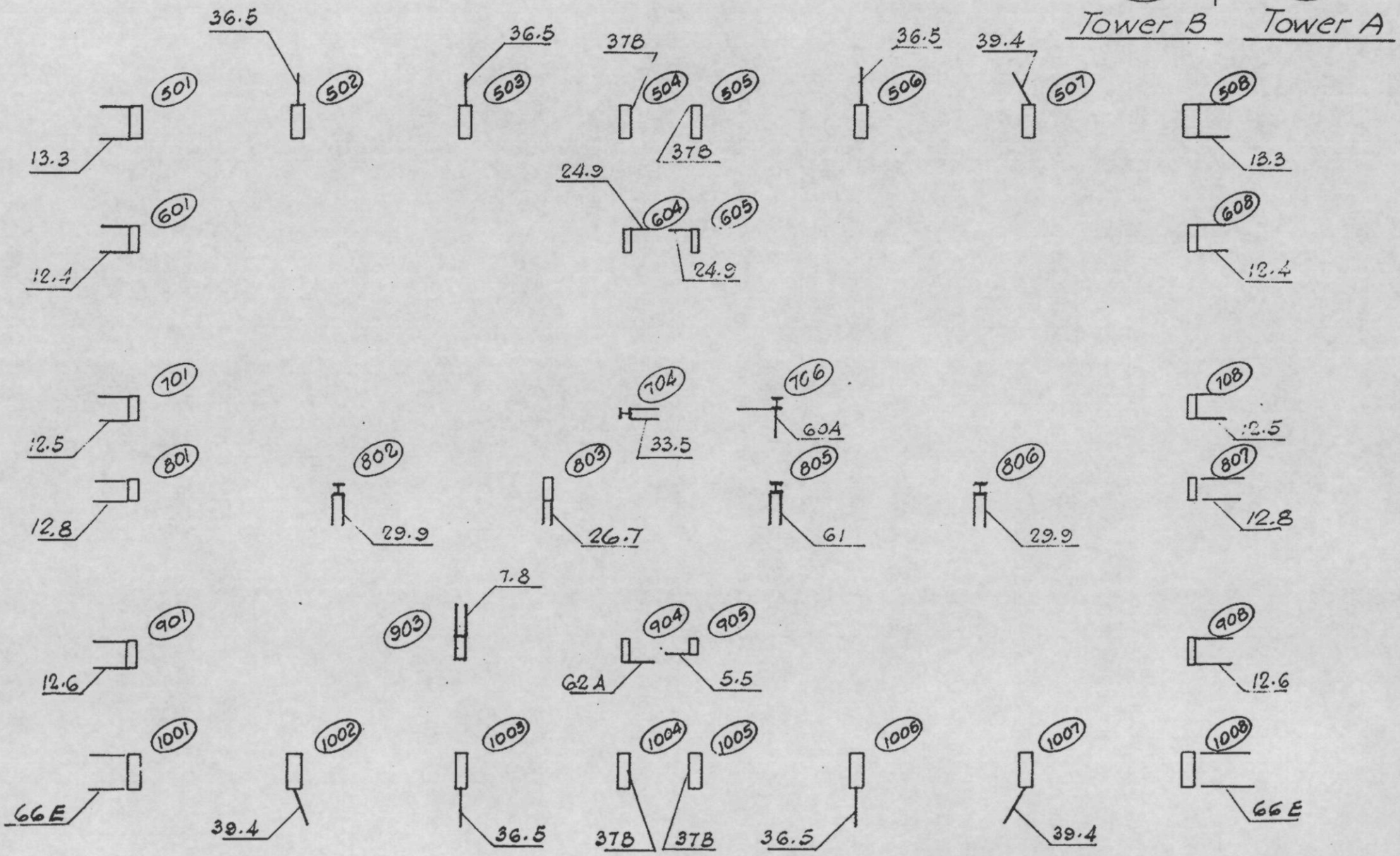

LICENSED PROFESSIONAL ENGINEER
LESLIE E. ROBERTSON
No. 34360
CITY OF THE STATE OF NEW YORK

DRAWN S.T.M.

REVIEWED D. Brewer

18-AB1-28

SKILLING, HELLE, CHRISTIANSEN, ROBERTSON — Structural & Civil Engineers

PROJECT THE WORLD TRADE CENTER | TITLE KEY PLAN FOR ANCHOR STRAPS- FLOOR 48 | DATE 4-30-69

VISIONS

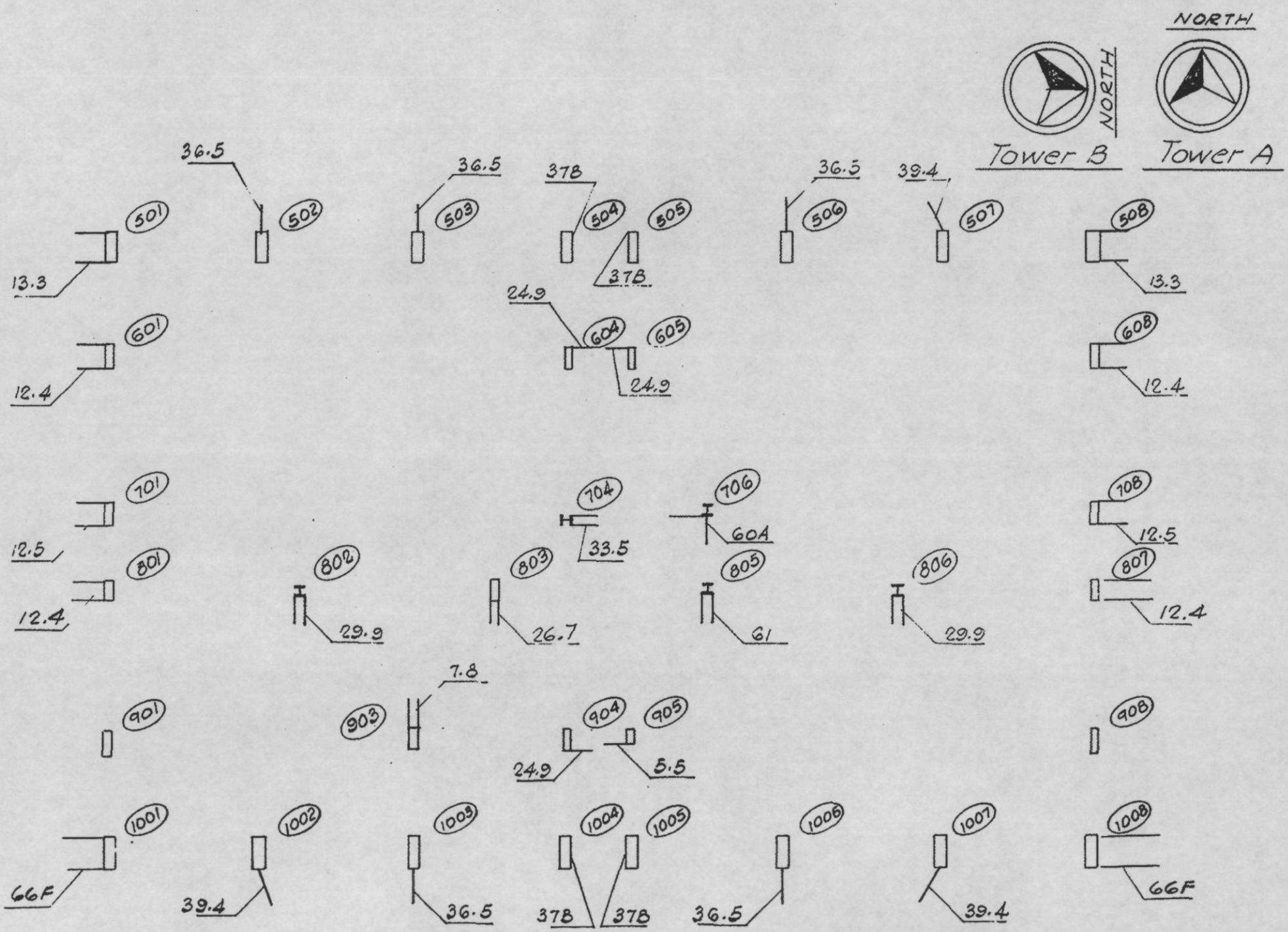

LICENSED PROFESSIONAL ENGINEER
LESLIE E. ROBERTSON
No. 34360
UNIVERSITY OF THE STATE OF NEW YORK

DESIGNED

DRAWN S.T.M.

REVIEWED W. Brewer

18-AB1-29

SKILLING, HELLE, CHRISTIANSEN, ROBERTSON — Structural & Civil Engineers

PROJECT THE WORLD TRADE CENTER | TITLE KEY PLAN FOR ANCHOR STRAPS-FL 49-55 | DATE 4-30-69

REVISIONS

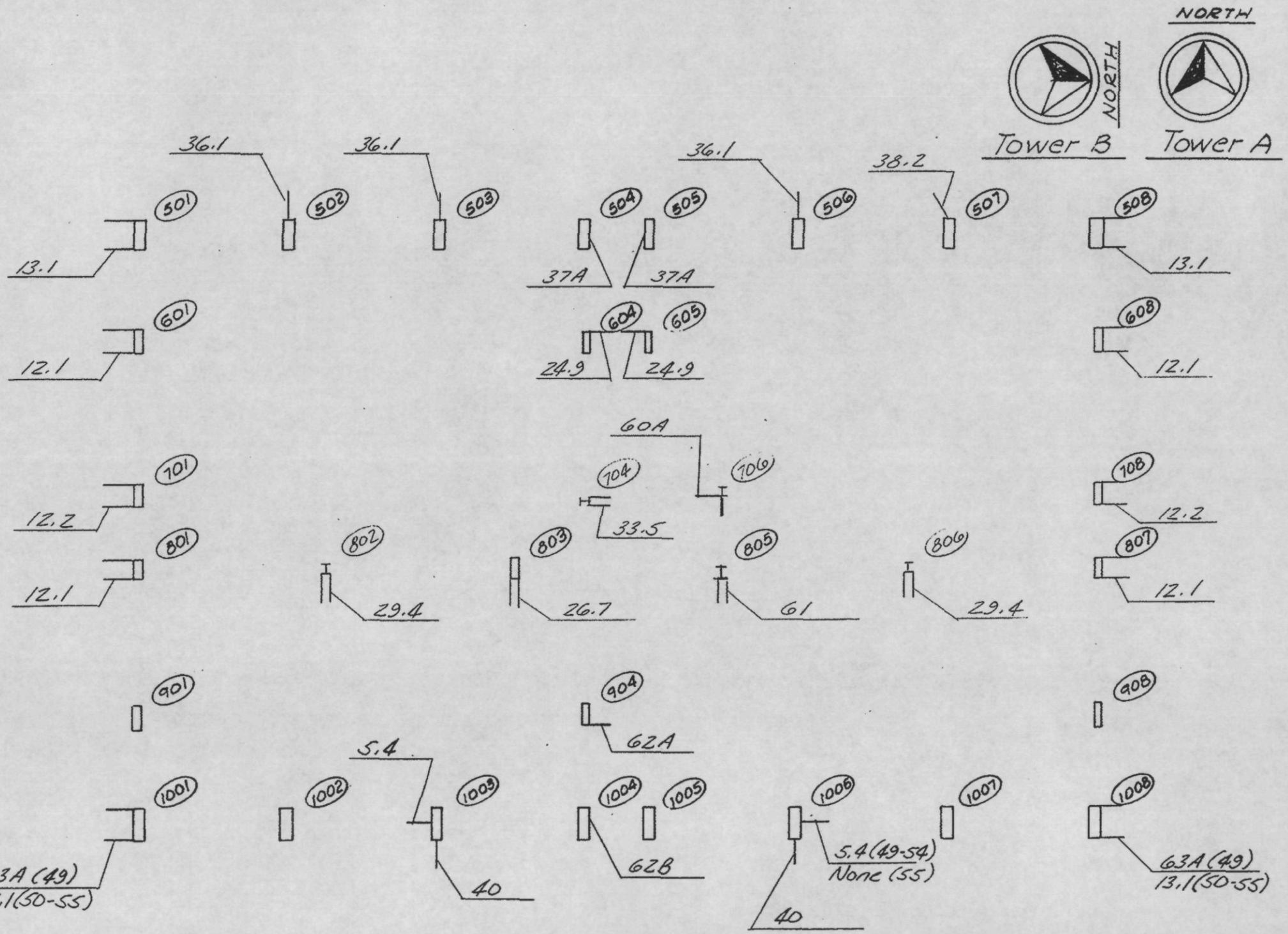

LICENSED PROFESSIONAL ENGINEER
LESLIE E. ROBERTSON
No. 34360
UNIVERSITY OF THE STATE OF NEW YORK

SIGNED

DRAWN J. Adams

REVIEWED W. Brewer

18-AB1-30

SKILLING, HELLE, CHRISTIANSEN, ROBERTSON — Structural & Civil Engineers

PROJECT THE WORLD TRADE CENTER | TITLE STRAP ANCHORS - KEY PLANS - FLOOR 56 | DATE 4-30-69

REVISIONS

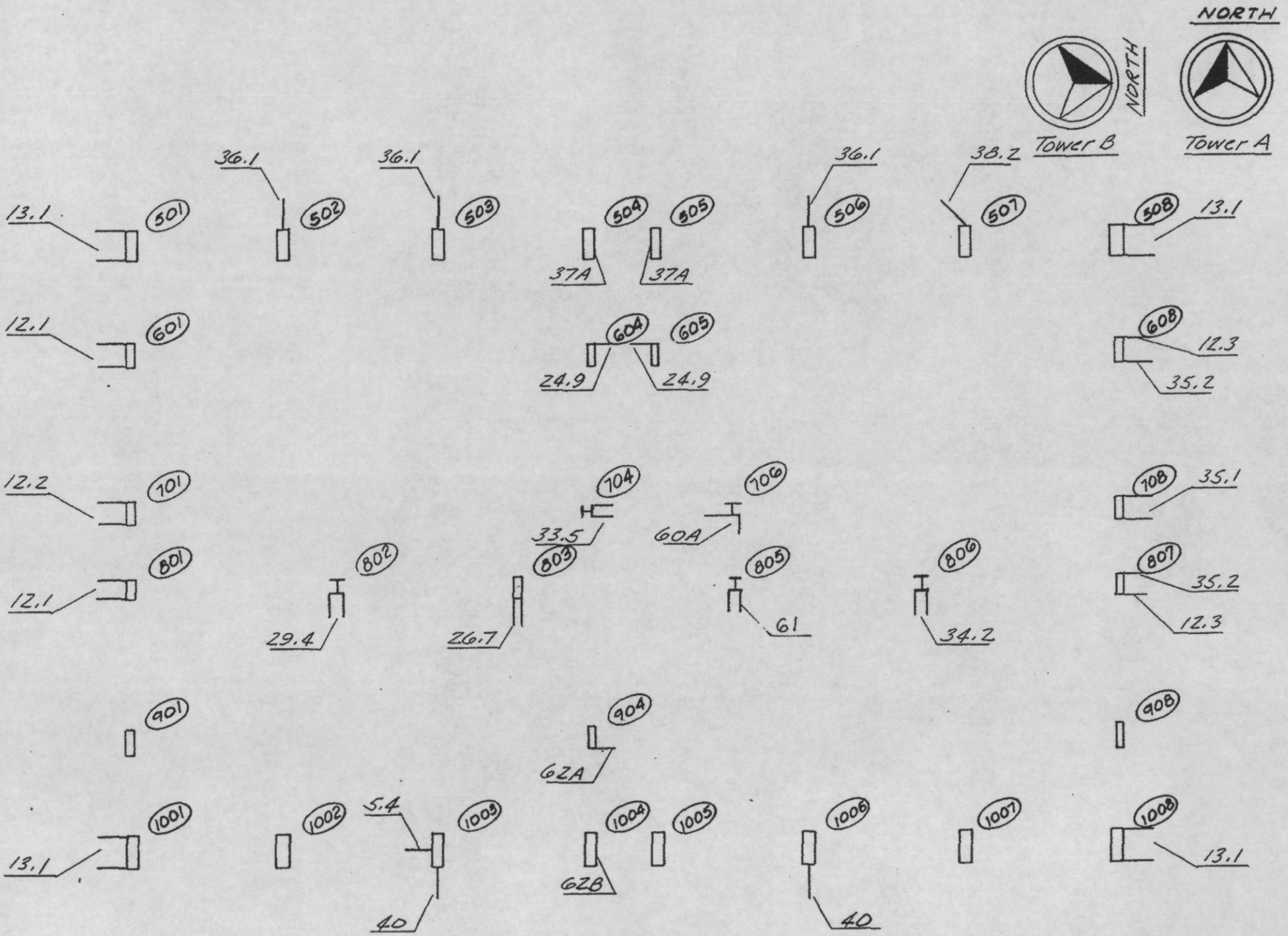

LICENSED PROFESSIONAL ENGINEER
LESLIE E. ROBERTSON
No. 34360
UNIVERSITY OF THE STATE OF NEW YORK

DESIGNED

DRAWN J. Adams

REVIEWED C.W. Brewer

18-AB1-31

SKILLING, HELLE, CHRISTIANSEN, ROBERTSON — Structural & Civil Engineers

PROJECT THE WORLD TRADE CENTER | TITLE STRAP ANCHORS - KEY PLANS - FLOOR 57. | DATE 4-30-69

REVISIONS

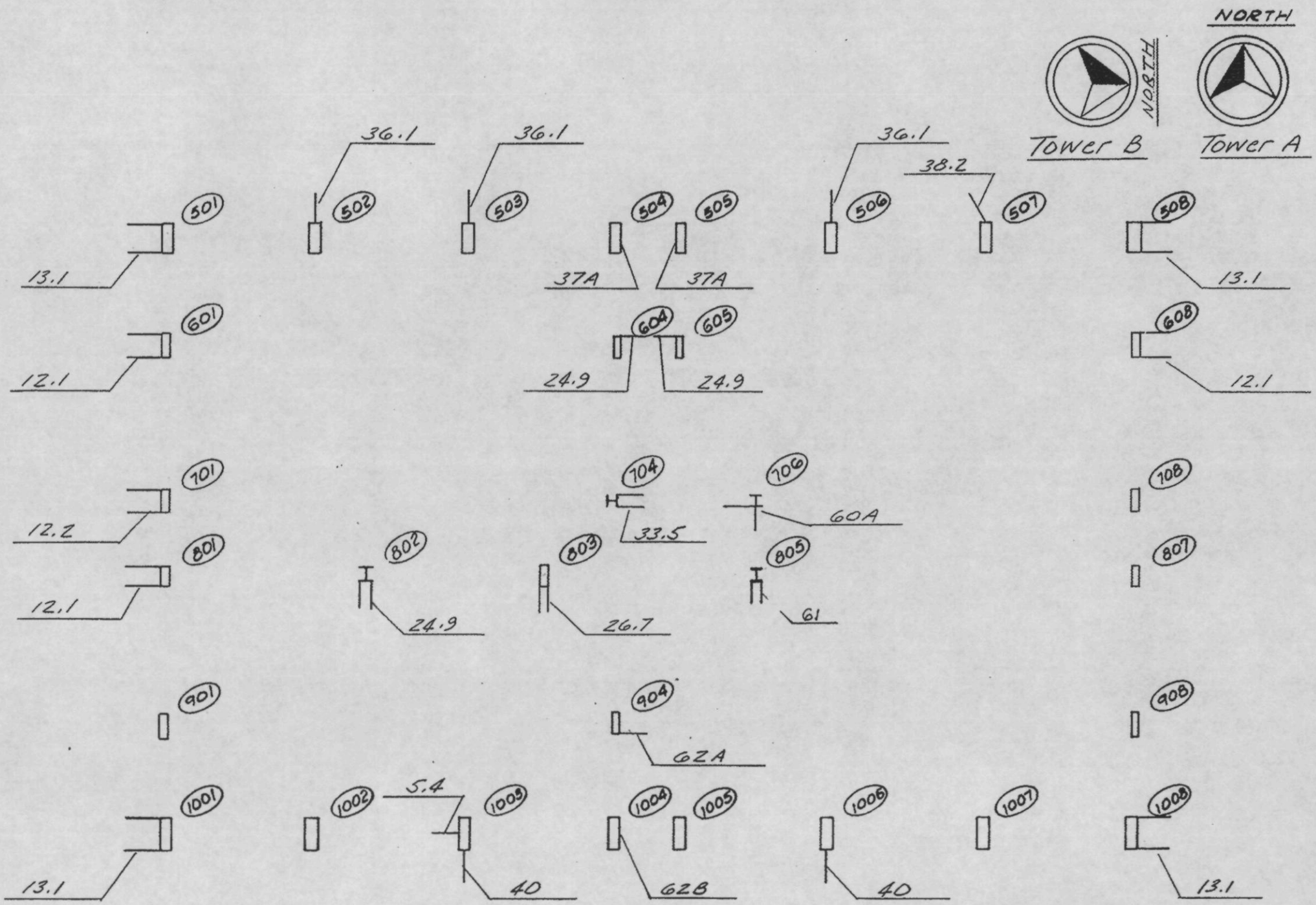

LICENSED PROFESSIONAL ENGINEER
LESLIE E. ROBERTSON
No. 34360
UNIVERSITY OF THE STATE OF NEW YORK

SIGNED

DRAWN J. Adams

REVIEWED W. Brewer

18-AB1-32

SKILLING, HELLE, CHRISTIANSEN, ROBERTSON — Structural & Civil Engineers

PROJECT THE WORLD TRADE CENTER | TITLE STRAP ANCHORS - KEY PLANS - FL 58-59 | DATE 4-30-69

REVISIONS

NORTH

NORTH

Tower B

Tower A

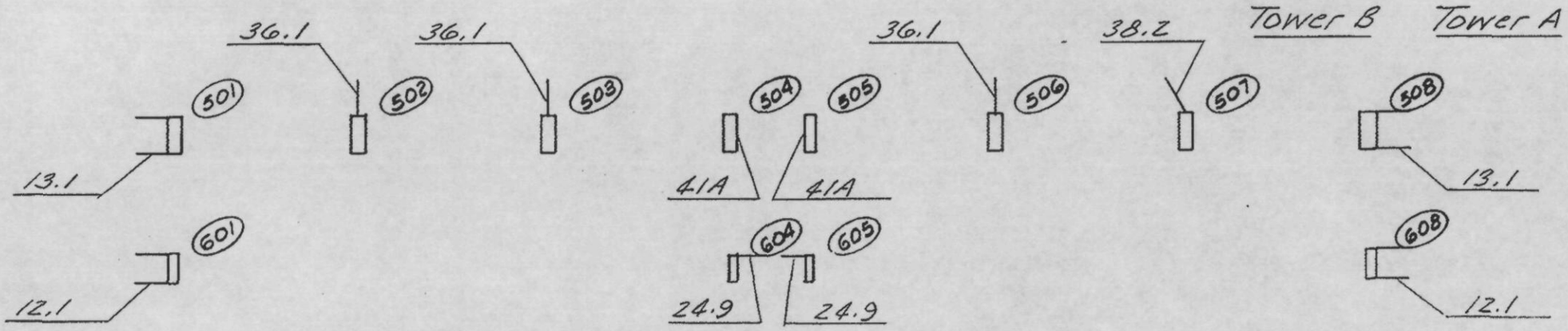

LICENSED PROFESSIONAL ENGINEER
LESLIE E. ROBERTSON
No. 34360
UNIVERSITY OF THE STATE OF NEW YORK

DESIGNED

DRAWN J. Adams

REVIEWED W. Brewer

18-AB1-33

SKILLING, HELLE, CHRISTIANSEN, ROBERTSON — Structural & Civil Engineers

PROJECT THE WORLD TRADE CENTER | TITLE KEY PLAN FOR ANCHOR STRAPS - FL 60 | DATE 4-30-69

REVISIONS

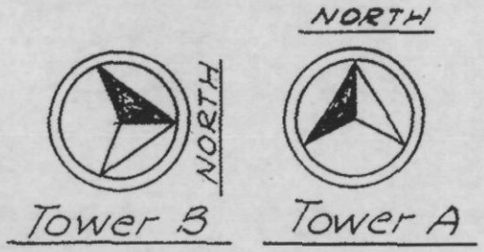

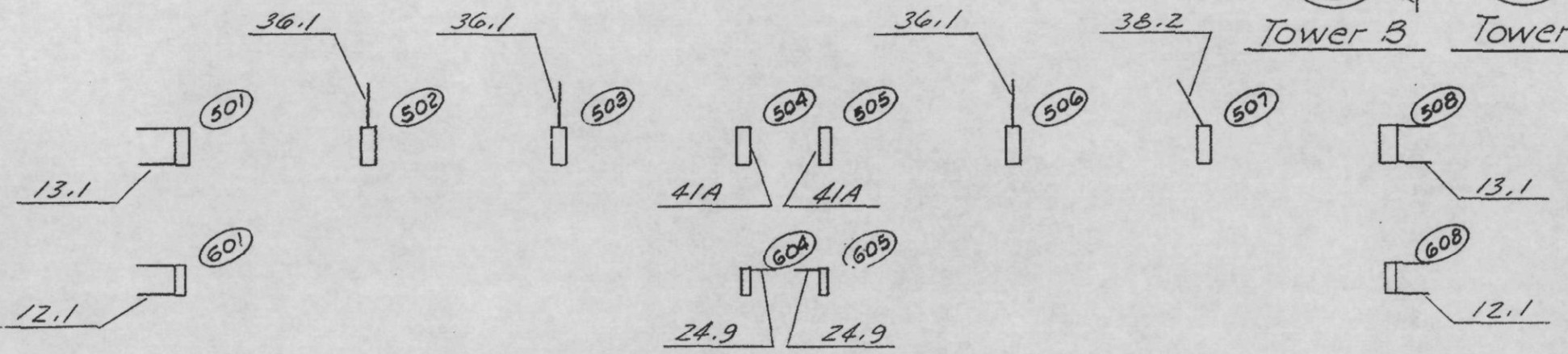

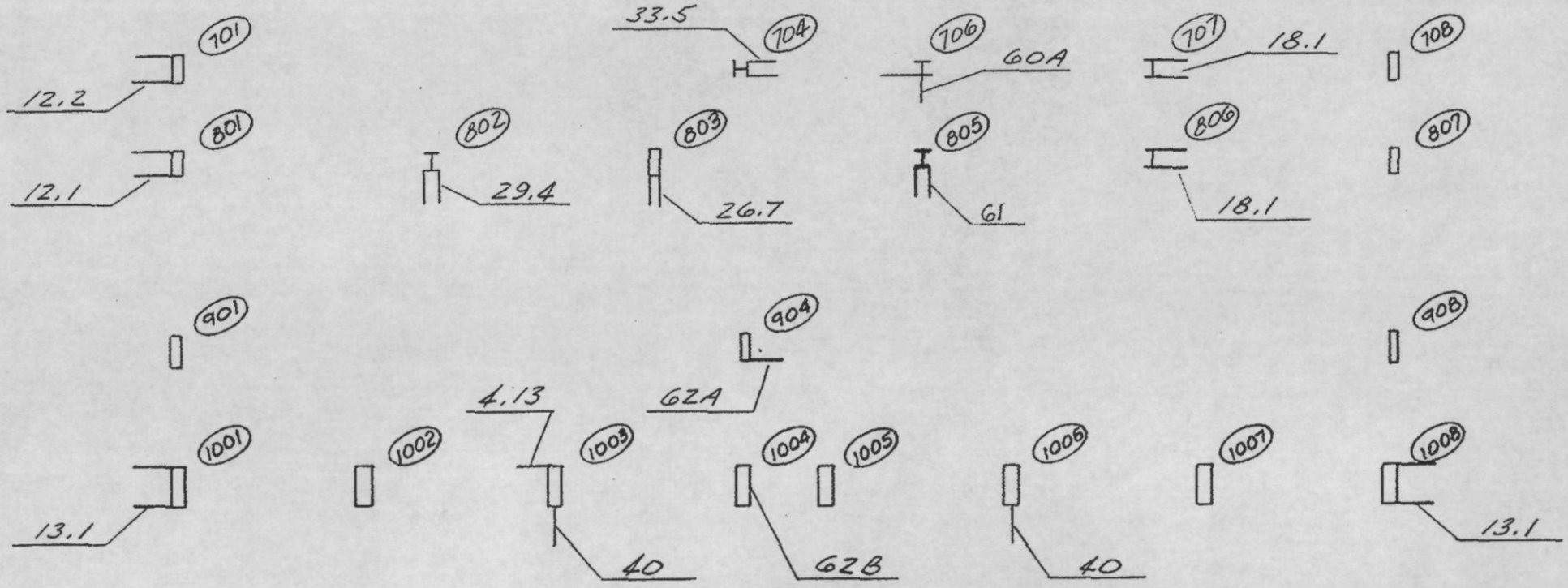

LICENSED PROFESSIONAL ENGINEER
LESLIE E. ROBERTSON
No. 34360
UNIVERSITY OF THE STATE OF NEW YORK

DESIGNED

DRAWN J. Adams

REVIEWED W. Brewer

18-AB1-34

SKILLING, HELLE, CHRISTIANSEN, ROBERTSON — Structural & Civil Engineers

PROJECT THE WORLD TRADE CENTER | TITLE KEY PLAN FOR ANCHOR STRAPS-FL 61-63 | DATE 4-30-69

REVISIONS

NORTH

NORTH

Tower B

Tower A

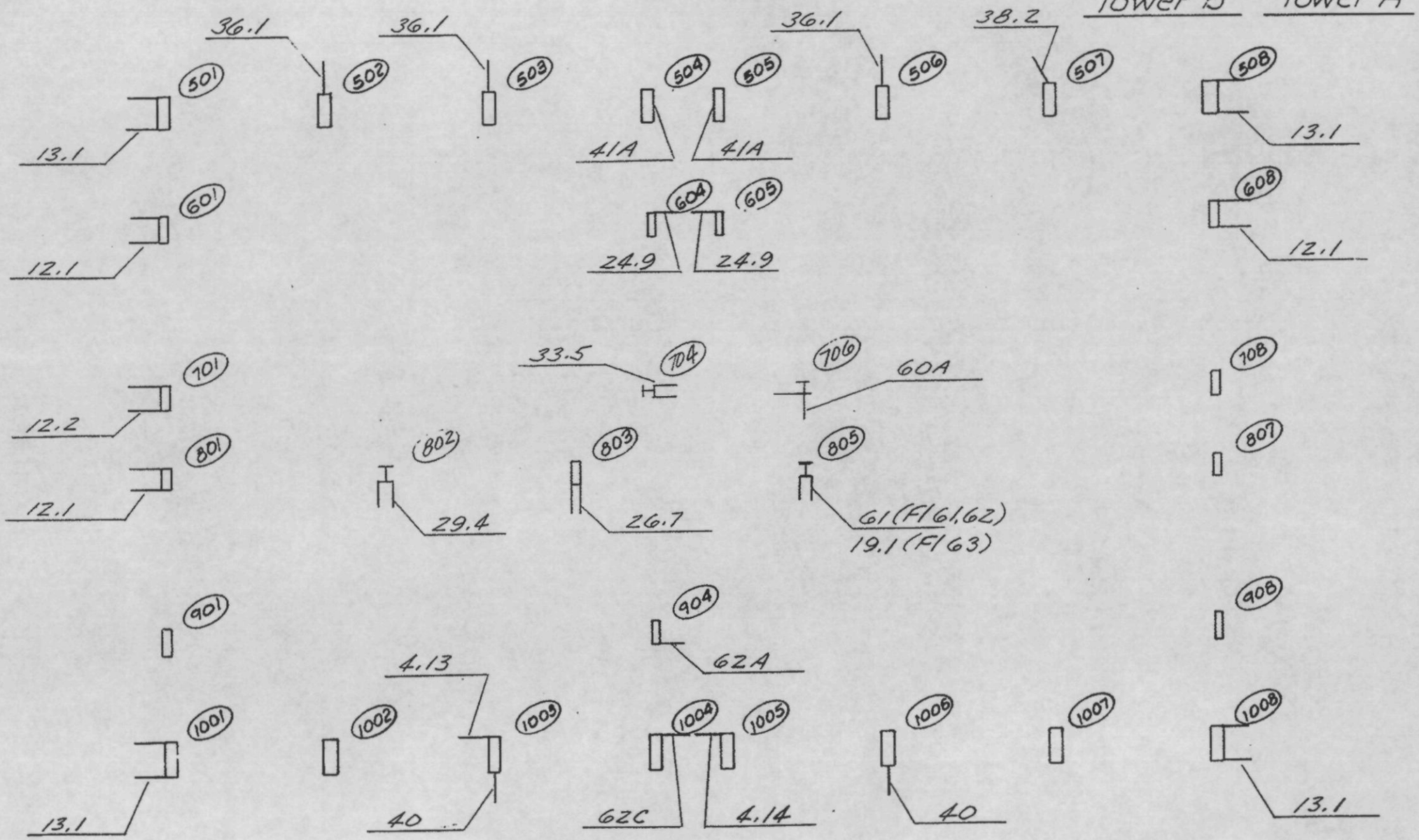

LICENSED PROFESSIONAL ENGINEER
LESLIE E. ROBERTSON
No. 34360
UNIVERSITY OF THE STATE OF NEW YORK

SIGNED

DRAWN J. Adams

REVIEWED W. Brewer

18-AB1-35

SKILLING, HELLE, CHRISTIANSEN, ROBERTSON — Structural & Civil Engineers

PROJECT THE WORLD TRADE CENTER | TITLE KEY PLAN FOR ANCHOR STRAPS-FL 64-66 | DATE 4-30-69

REVISIONS

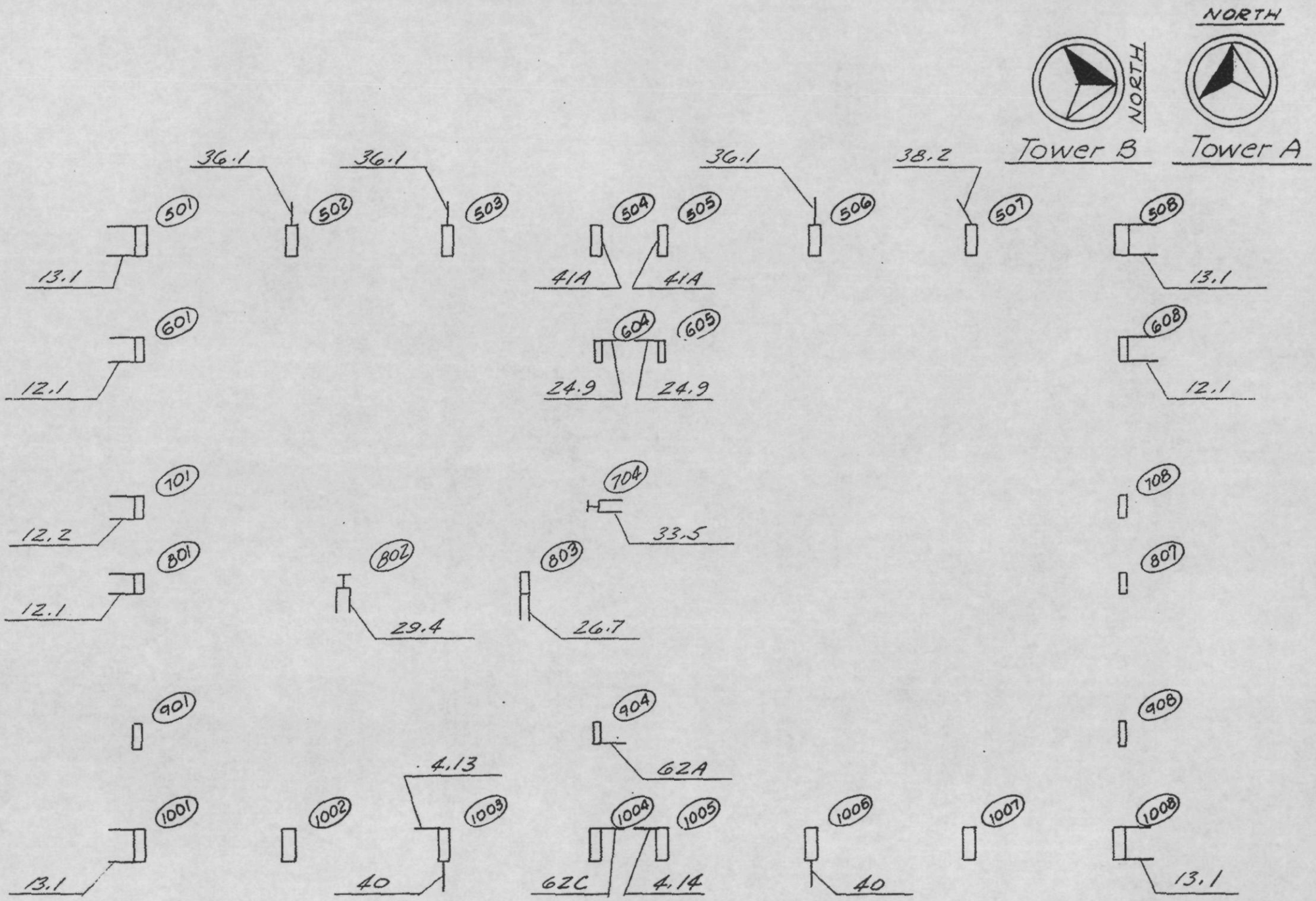

LICENSED PROFESSIONAL ENGINEER
LESLIE E. ROBERTSON
No. 34360
UNIVERSITY OF THE STATE OF NEW YORK

DESIGNED

DRAWN J. Adams

REVIEWED W. Brewer

18-AB1-36

SKILLING, HELLE, CHRISTIANSEN, ROBERTSON — Structural & Civil Engineers

PROJECT THE WORLD TRADE CENTER | TITLE KEY PLAN FOR ANCHOR STRAPS-FL 67-68-TOWER A | DATE 4-30-69

REVISIONS

NORTH

Tower A

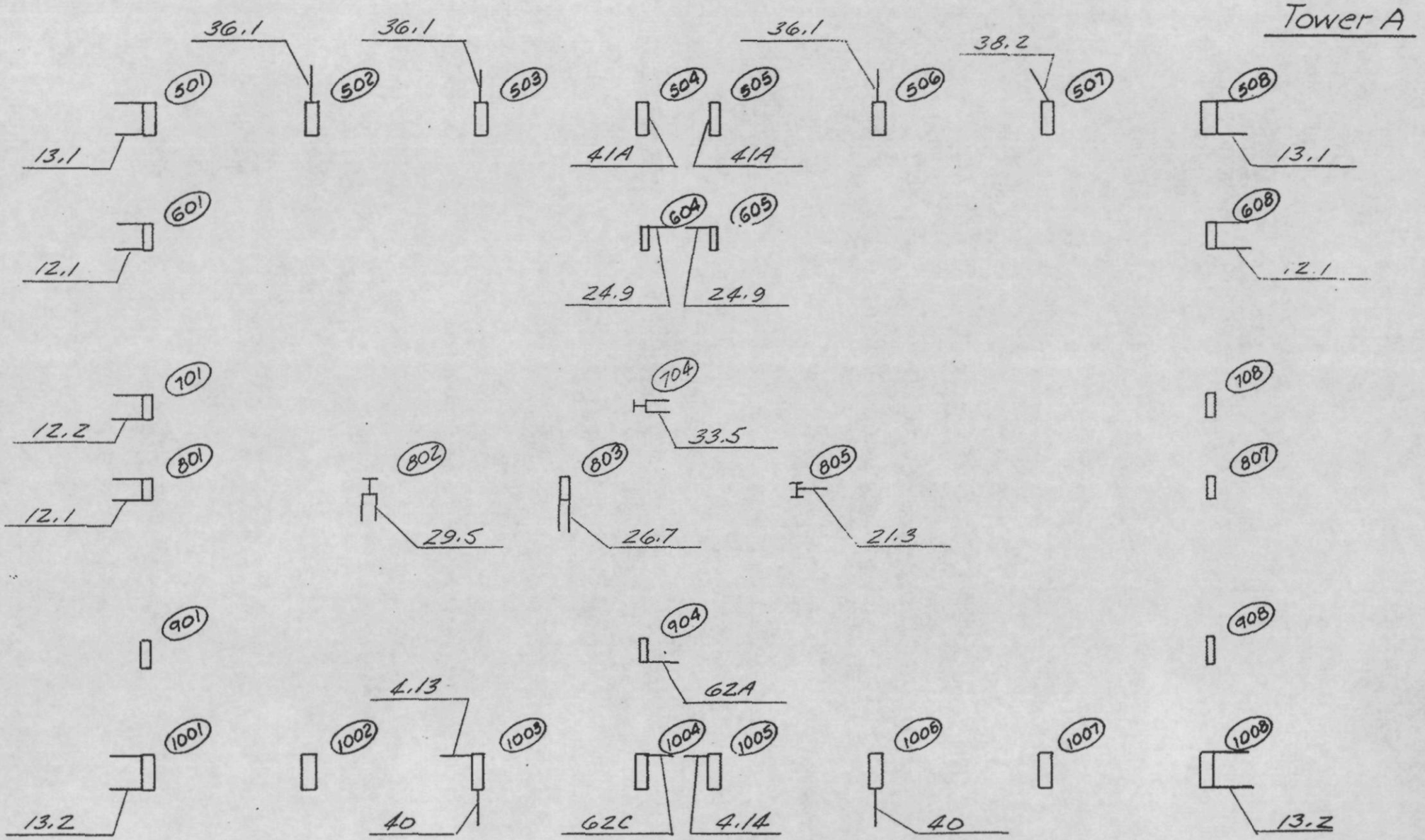

LICENSED PROFESSIONAL ENGINEER
LESLIE E. ROBERTSON
No. 34360
UNIVERSITY OF THE STATE OF NEW YORK

SIGNED

DRAWN J. Adams

REVIEWED W. Brewer

18-AB1-37

SKILLING, HELLE, CHRISTIANSEN, ROBERTSON — Structural & Civil Engineers

PROJECT THE WORLD TRADE CENTER | TITLE KEY PLAN FOR ANCHOR STRAPS-FL 70-71 | DATE 4-30-69

REVISIONS

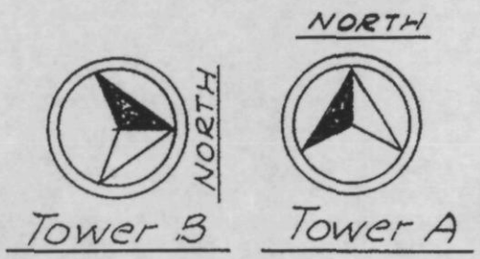

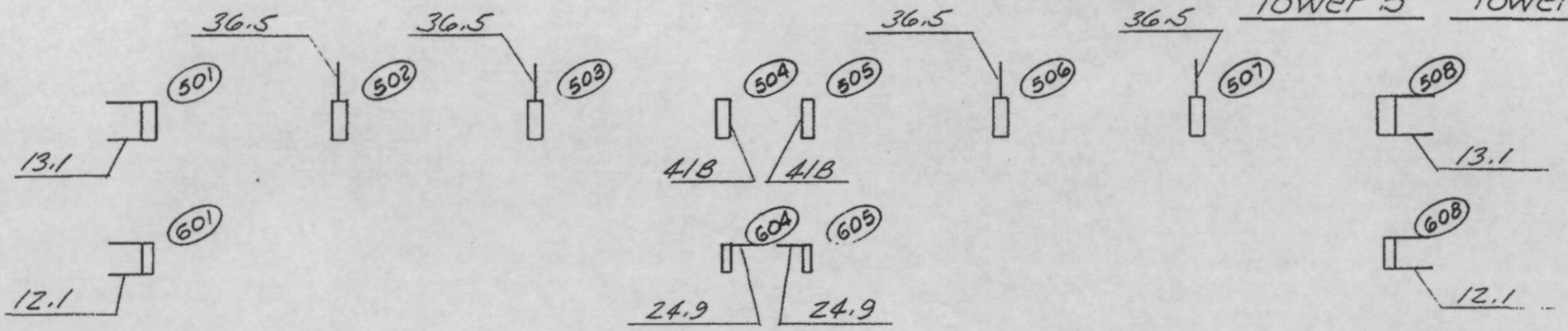

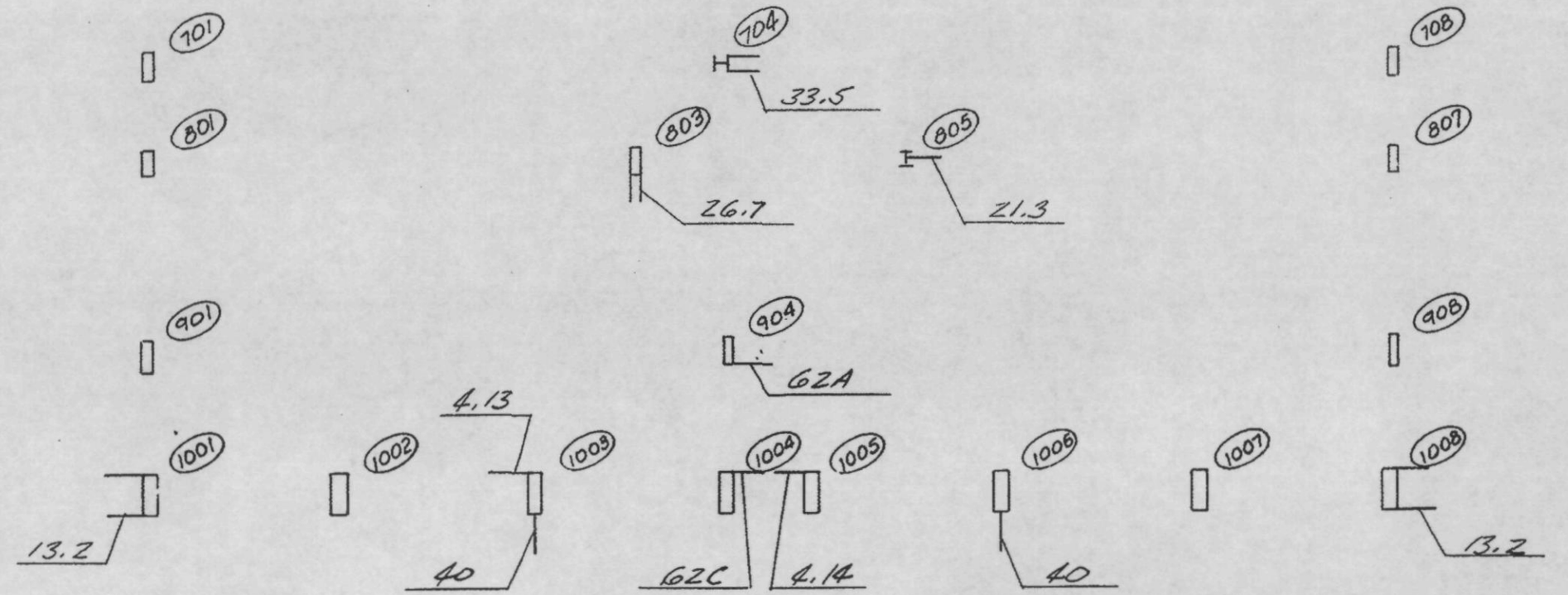

LICENSED PROFESSIONAL ENGINEER
LESLIE E. ROBERTSON
No. 34360
UNIVERSITY OF THE STATE OF NEW YORK

SIGNED

DRAWN J. Adams

REVIEWED W. Brewer

18-AB1-39

SKILLING, HELLE, CHRISTIANSEN, ROBERTSON — Structural & Civil Engineers

PROJECT: THE WORLD TRADE CENTER | TITLE: KEY PLAN FOR ANCHOR STRARS-FL 72-73 | DATE: 4-30-69

REVISIONS

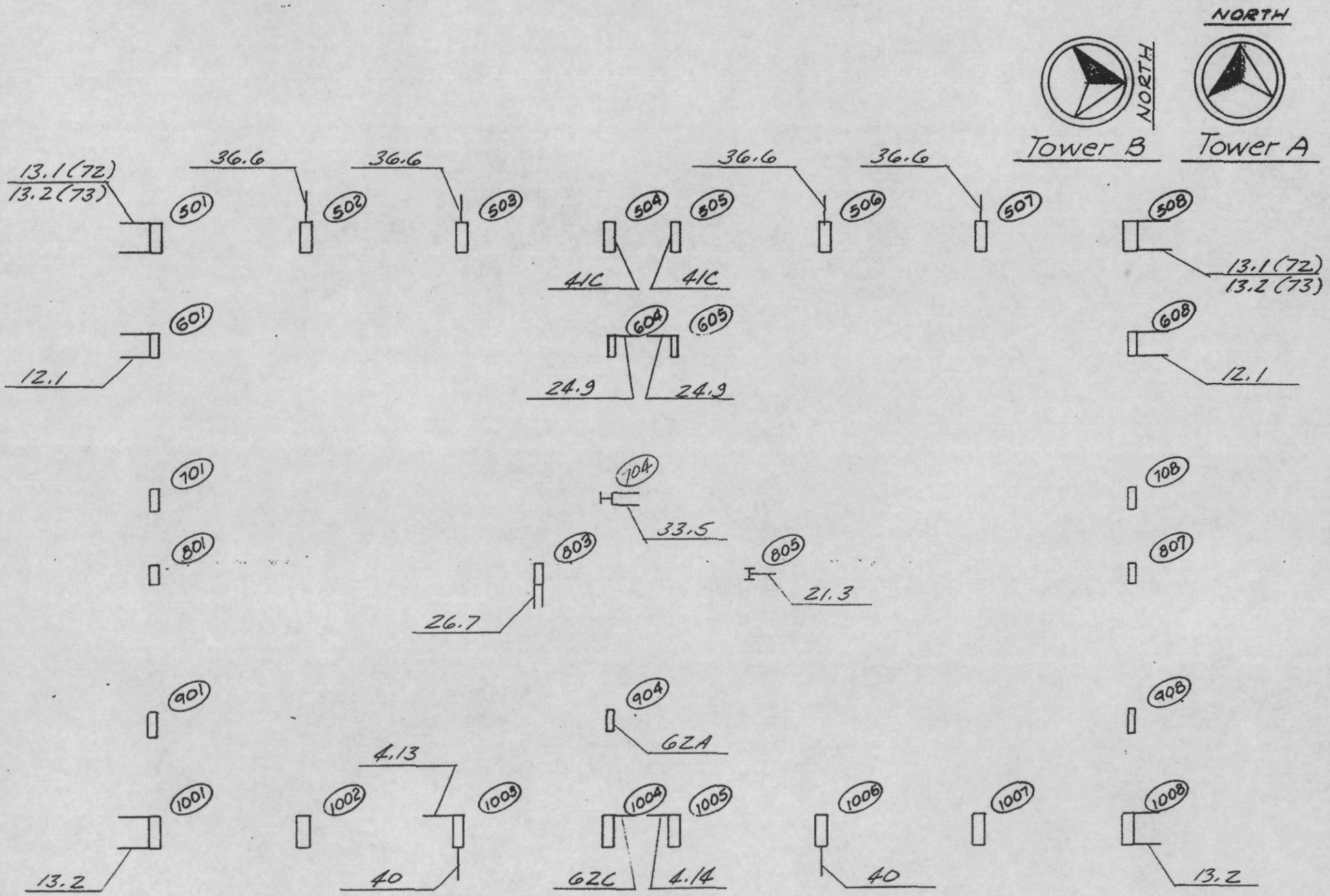

LICENSED PROFESSIONAL ENGINEER
LESLIE E. ROBERTSON
No. 34360
CITY OF THE STATE OF NEW YORK

SIGNED

DRAWN J. Adams

REVIEWED J. Brewer

18-AB1-40

SKILLING, HELLE, CHRISTIANSEN, ROBERTSON — Structural & Civil Engineers

PROJECT THE WORLD TRADE CENTER | TITLE KEY PLAN FOR ANCHOR STRAPS - FL 74 | DATE 4-30-69

REVISIONS

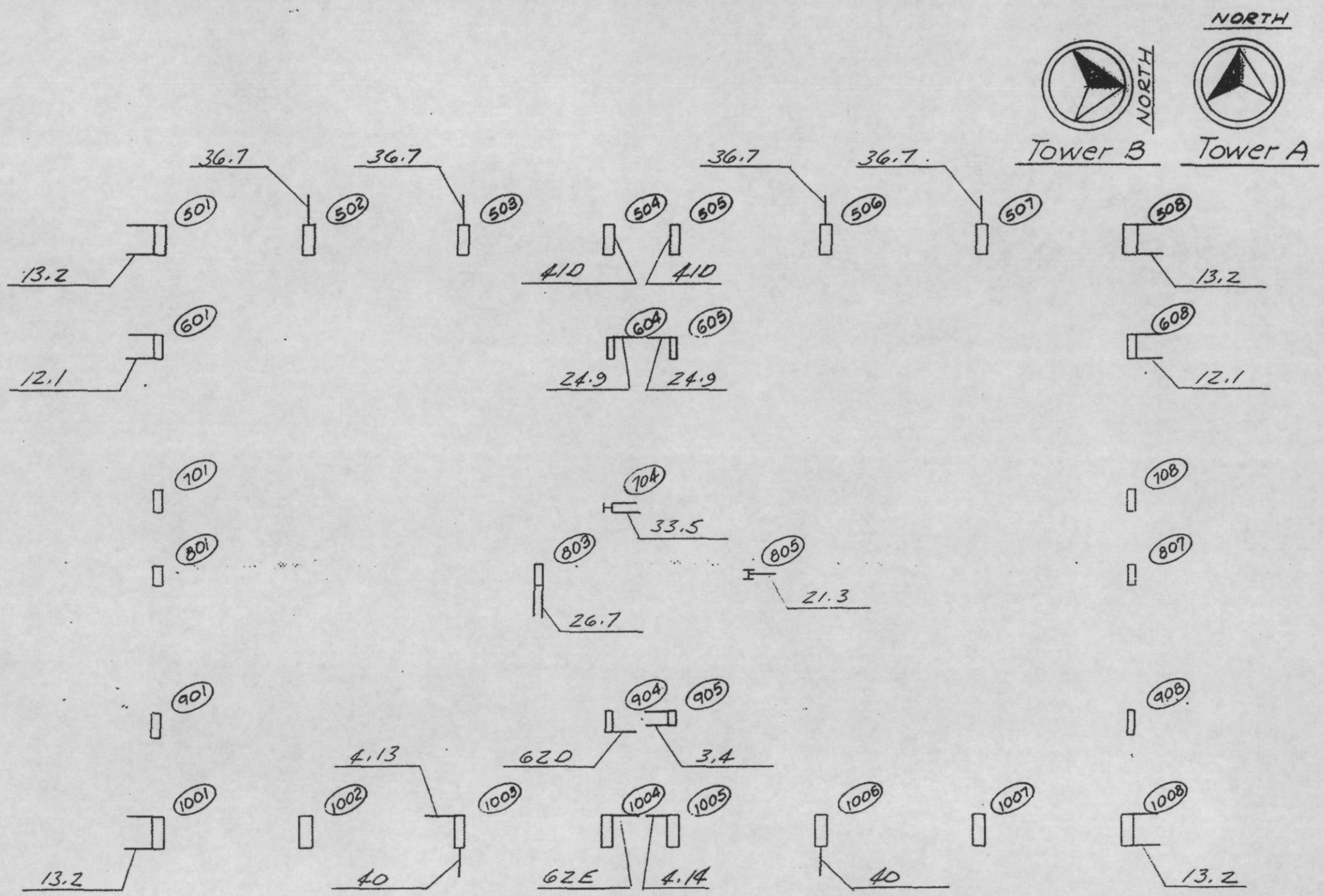

LESLIE E. ROBERTSON LICENSED PROFESSIONAL ENGINEER No. 34360 CITY OF THE STATE OF NEW YORK

SIGNED

DRAWN J. Adams

REVIEWED W. Brewer

E-AB:-4;

SKILLING, HELLE, CHRISTIANSEN, ROBERTSON — Structural & Civil Engineers

PROJECT THE WORLD TRADE CENTER | TITLE STRAP ANCHORS - KEY PLANS - FLOOR 75 | DATE 5-28-69

REVISIONS

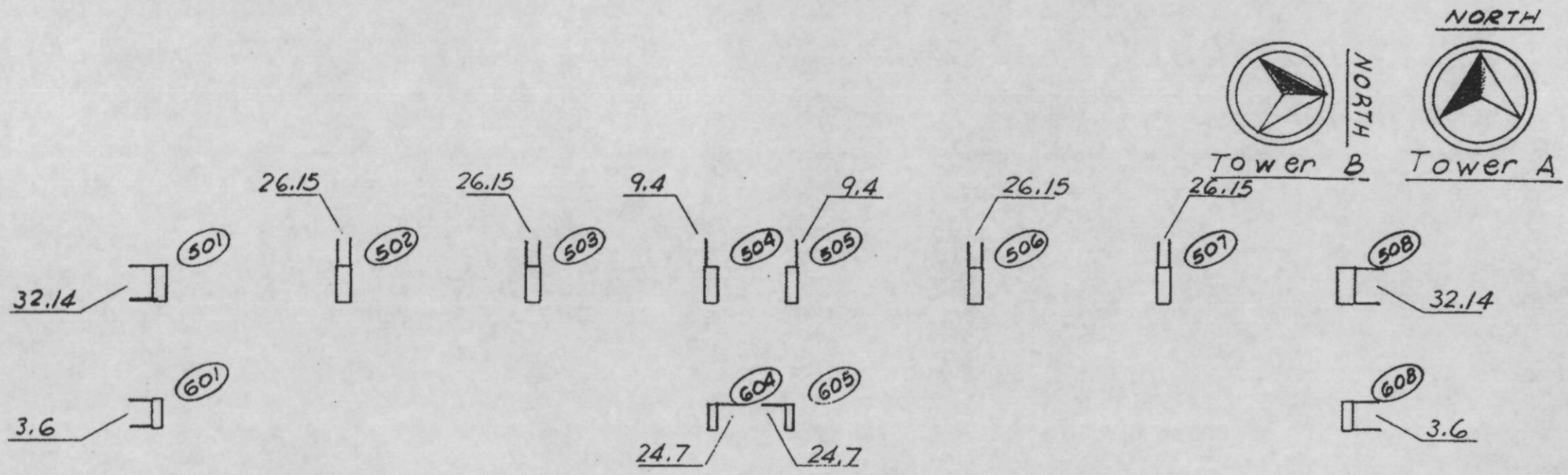

REGISTERED PROFESSIONAL ENGINEER
No. 34360
OF THE STATE OF NEW YORK

DRAWN

REVIEWED

1E-AB1-42

SKILLING, HELLE, CHRISTIANSEN, ROBERTSON — Structural & Civil Engineers

PROJECT THE WORLD TRADE CENTER | TITLE STRAP ANCHORS - KEY PLANS - FLOOR 77 | DATE 5-28-69

REVISIONS

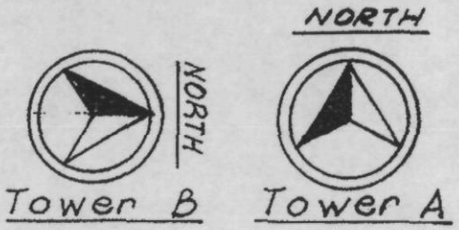

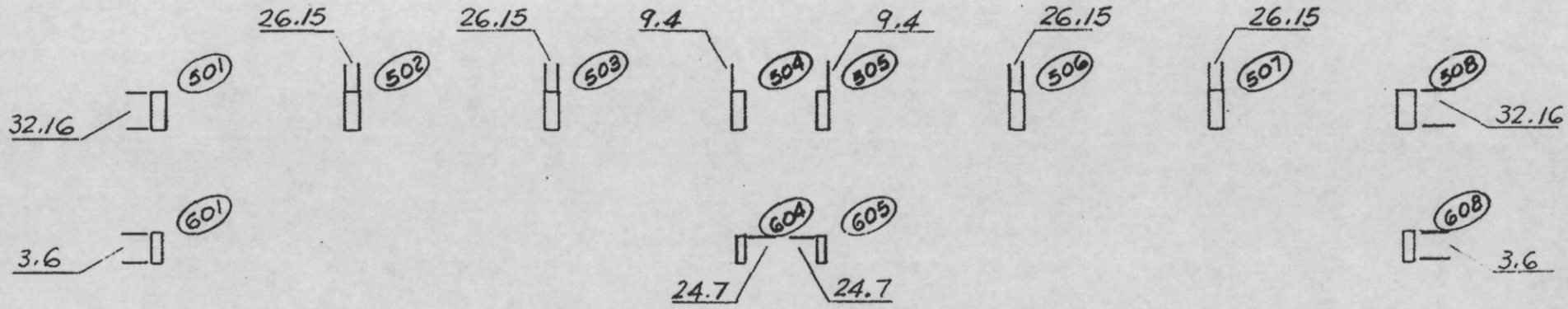

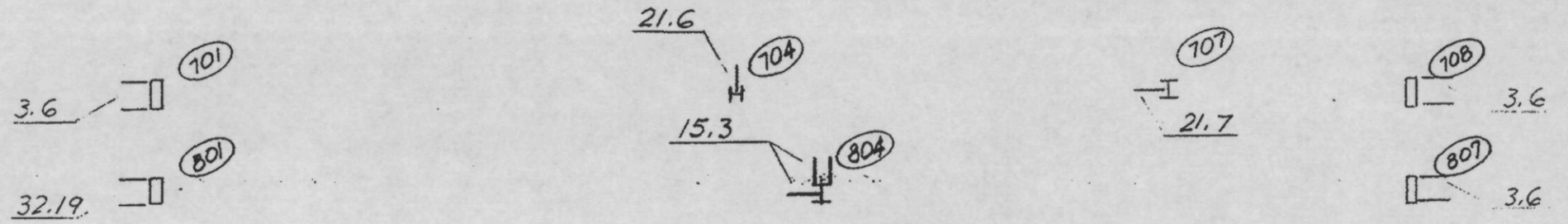

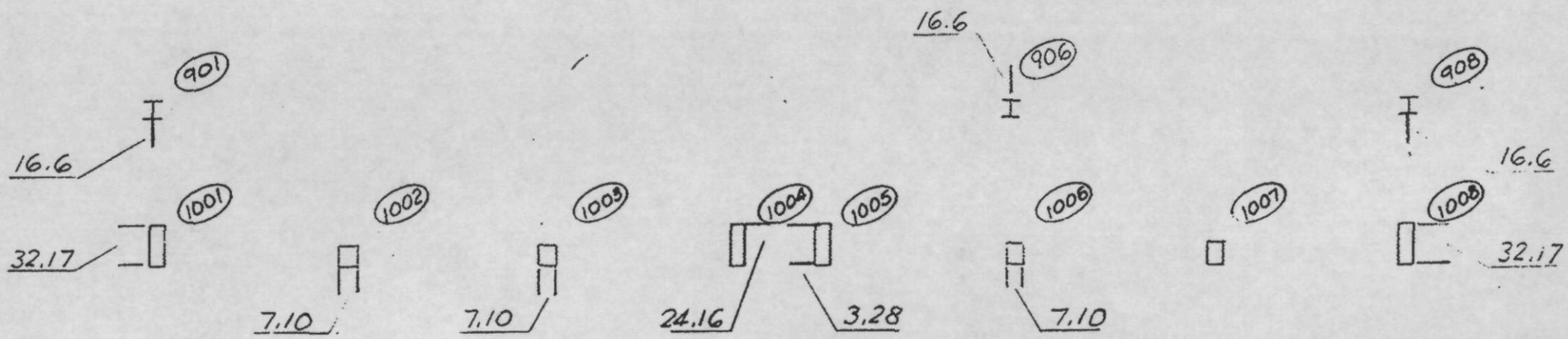

SIGNED

DRAWN

REVIEWED

16-43-43

SKILLING HELLE CHRISTIANSEN ROBERTSON — Structural & Civil Engineers

PROJECT THE WORLD TRADE CENTER | TITLE STRAP ANCHORS - KEY PLANS - FLOOR 78 | DATE 4-30-69

ISIONS

NORTH

Tower B — NORTH — Tower A

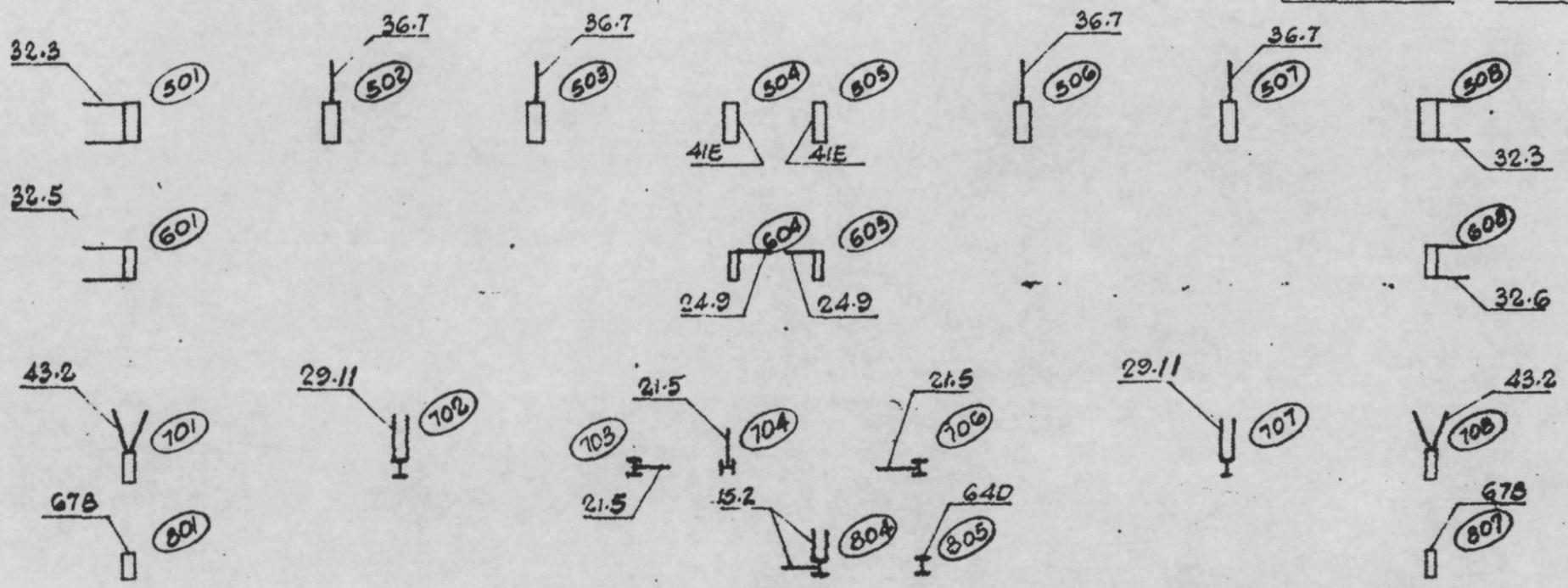

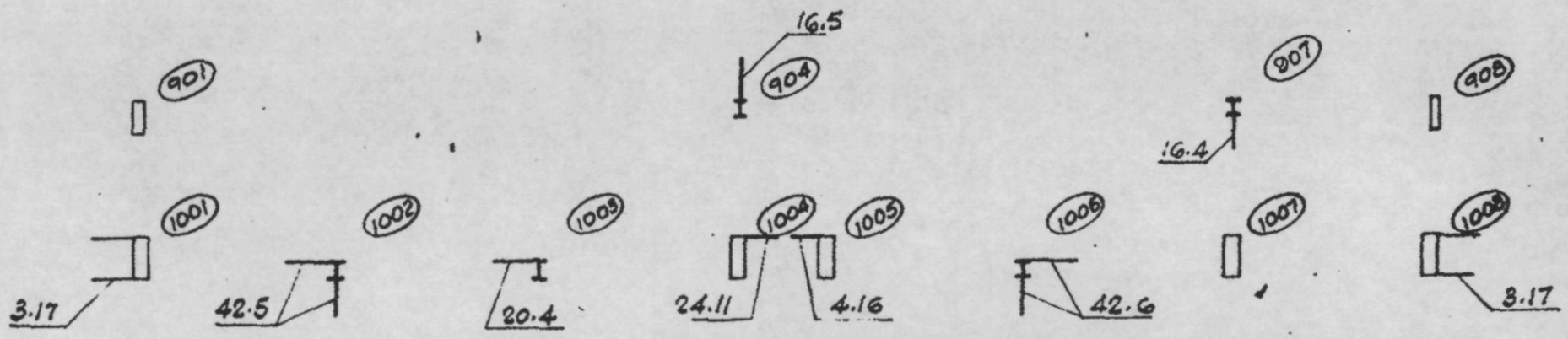

LICENSED PROFESSIONAL ENGINEER
LESLIE E. ROBERTSON
No. 34960
CITY OF THE STATE OF NEW YORK

DESIGNED

DRAWN S.T.M.

REVIEWED D. Brewer

18-481-44

SKILLING, HELLE, CHRISTIANSEN, ROBERTSON — Structural & Civil Engineers

PROJECT THE WORLD TRADE CENTER | TITLE STRAP ANCHORS - KEY PLANS - FLOOR 79 | DATE 4-30-69

REVISIONS

NORTH

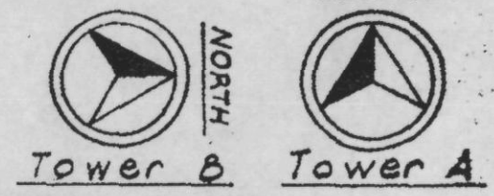

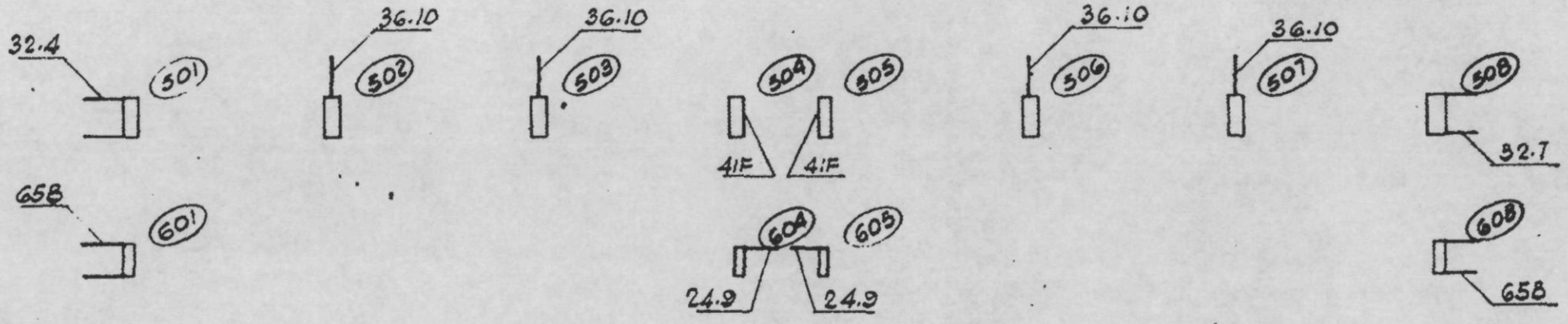

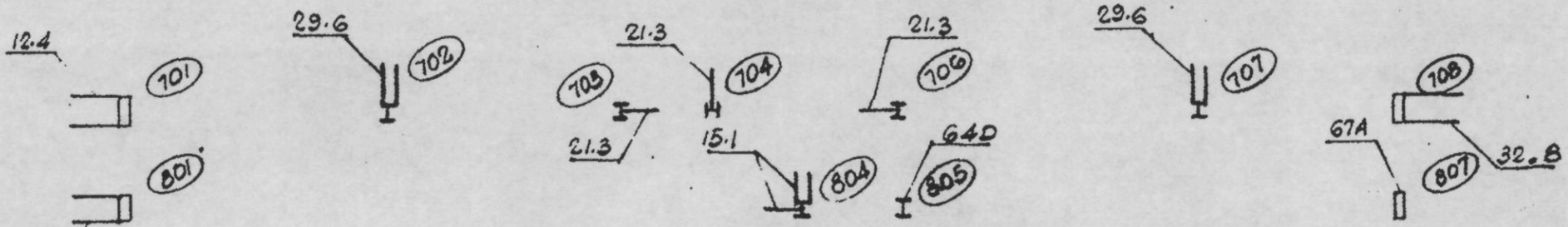

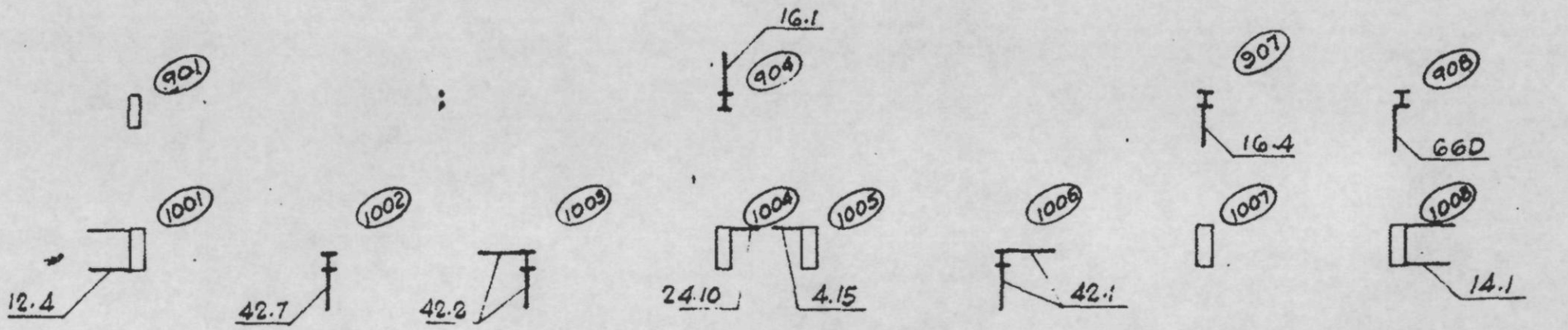

LICENSED PROFESSIONAL ENGINEER
LESLIE E. ROBERTSON
No. 34360
UNIVERSITY OF THE STATE OF NEW YORK

SIGNED

DRAWN S.T.M.

REVIEWED W. Brewer

18-AB1-45

SKILLING, HELLE, CHRISTIANSEN, ROBERTSON — Structural & Civil Engineers

PROJECT THE WORLD TRADE CENTER | TITLE STRAP ANCHORS - KEY PLANS - FLOOR 80 | DATE 4-30-69

REVISIONS

NORTH

Tower B — NORTH — Tower A

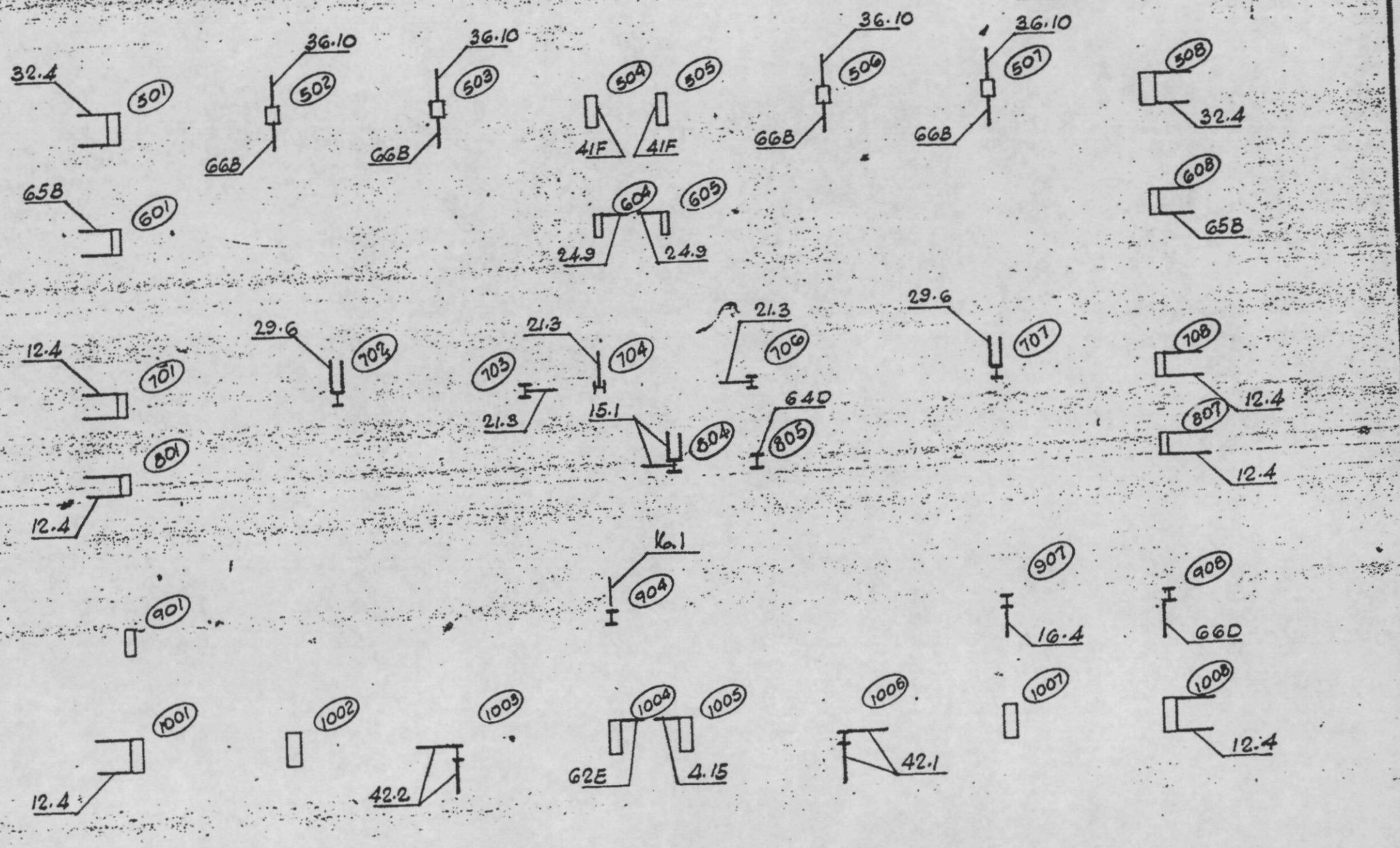

SIGNED

DRAWN S.T.M.

REVIEWED

18-481-46

SKILLING, HELLE, CHRISTIANSEN, ROBERTSON — Structural & Civil Engineers

PROJECT THE WORLD TRADE CENTER | TITLE STRAP ANCHORS - KEY PLANS - FLOOR 81 | DATE 4-30-69

EVISIONS

NORTH

NORTH

Tower B

Tower A

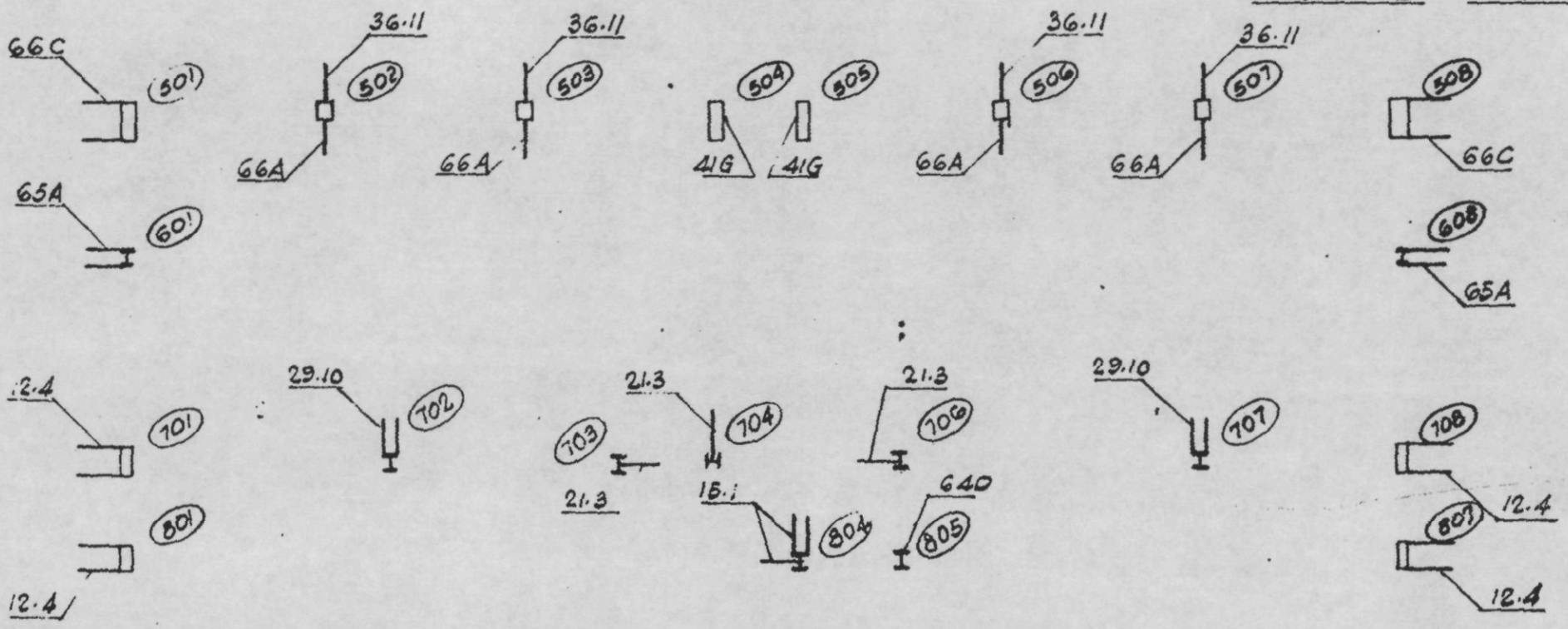

LICENSED PROFESSIONAL ENGINEER
LESLIE E. ROBERTSON
No. 34360
CITY OF THE STATE OF NEW YORK

DESIGNED

DRAWN
S.T.M.

SKILLING, HELLE, CHRISTIANSEN, ROBERTSON — Structural & Civil Engineers

PROJECT THE WORLD TRADE CENTER | TITLE STRAP ANCHORS - KEY PLANS - FLOOR 82 | DATE 4-30-69

REVISIONS

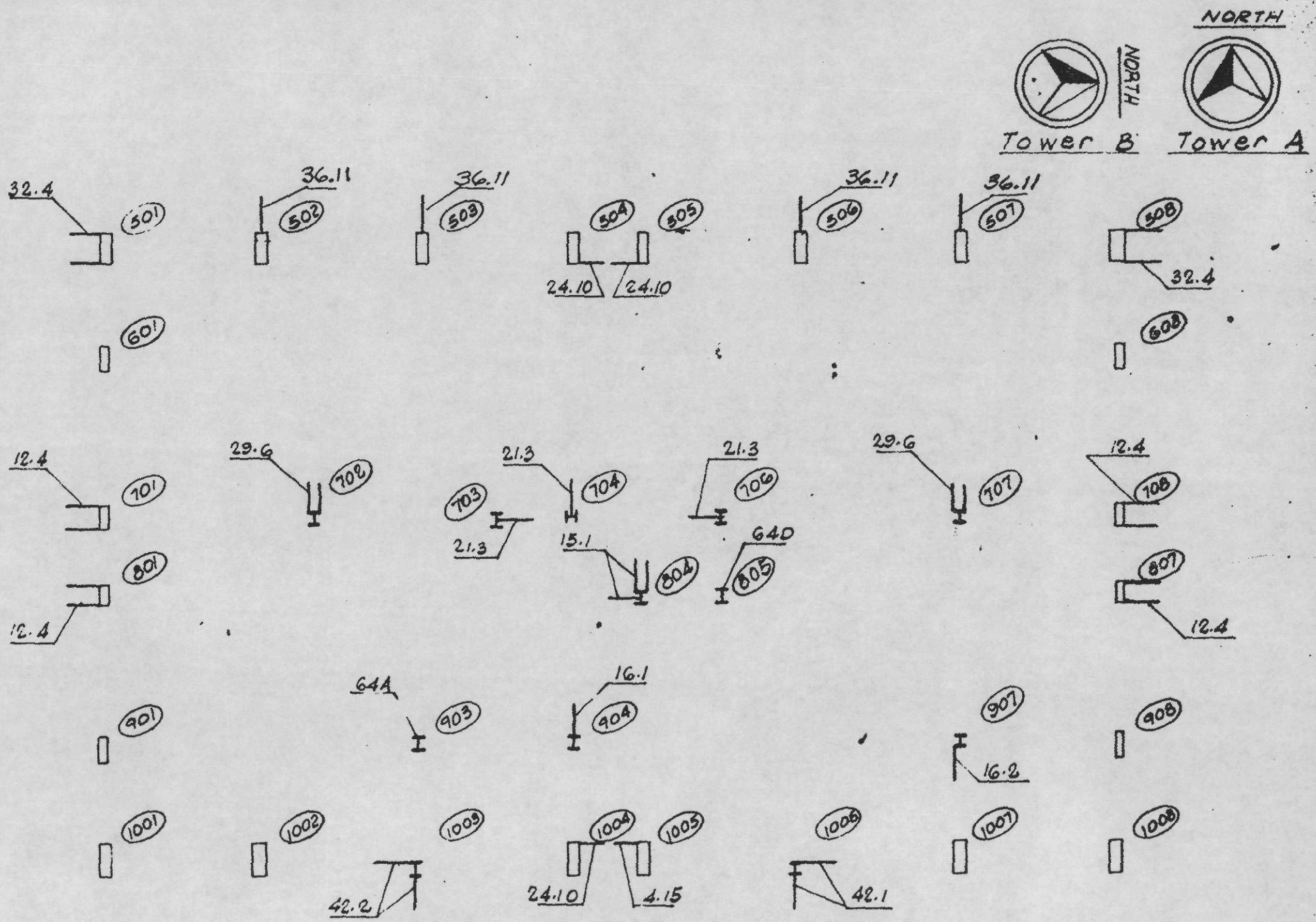

LESLIE E. ROBERTSON
LICENSED PROFESSIONAL ENGINEER
No 34360
CITY OF THE STATE OF NEW YORK

DESIGNED

DRAWN S.T.M.

REVIEWED

18-481-48

SKILLING, HELLE, CHRISTIANSEN, ROBERTSON — Structural & Civil Engineers

PROJECT: THE WORLD TRADE CENTER | TITLE: KEY PLAN FOR ANCHOR STRAPS-FL 83 | DATE: 4-30-69

REVISIONS

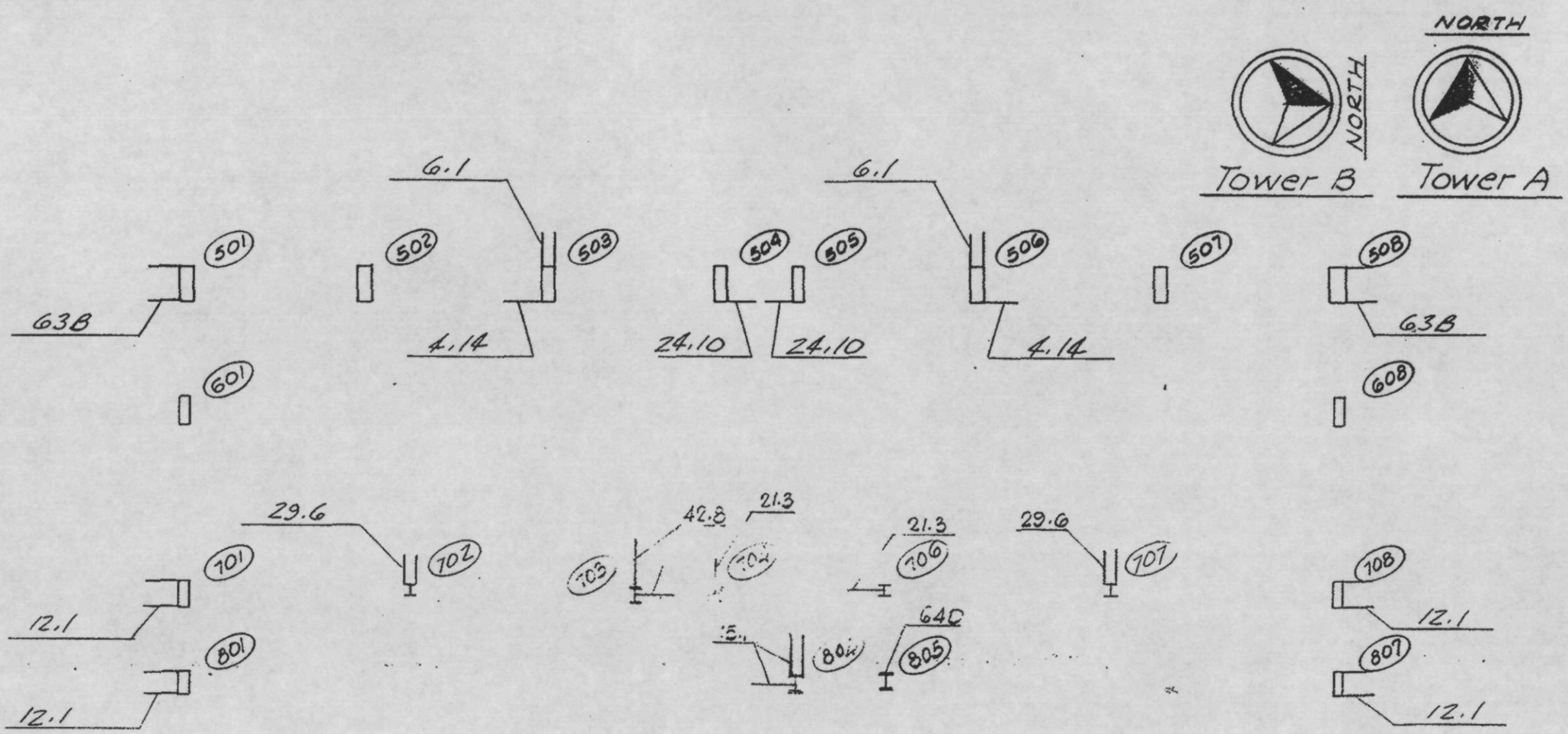

LICENSED PROFESSIONAL ENGINEER
LESLIE E. ROBERTSON
No. 34360
OF THE STATE OF NEW YORK

DRAWN J. Adams

REVIEWED J. Petrucelli

8-AB1-49

SKILLING, HELLE, CHRISTIANSEN, ROBERTSON — Structural & Civil Engineers

PROJECT: THE WORLD TRADE CENTER | TITLE: KEY PLAN FOR ANCHOR STRAPS-FL 84-86 | DATE: 4-30-69

REVISIONS

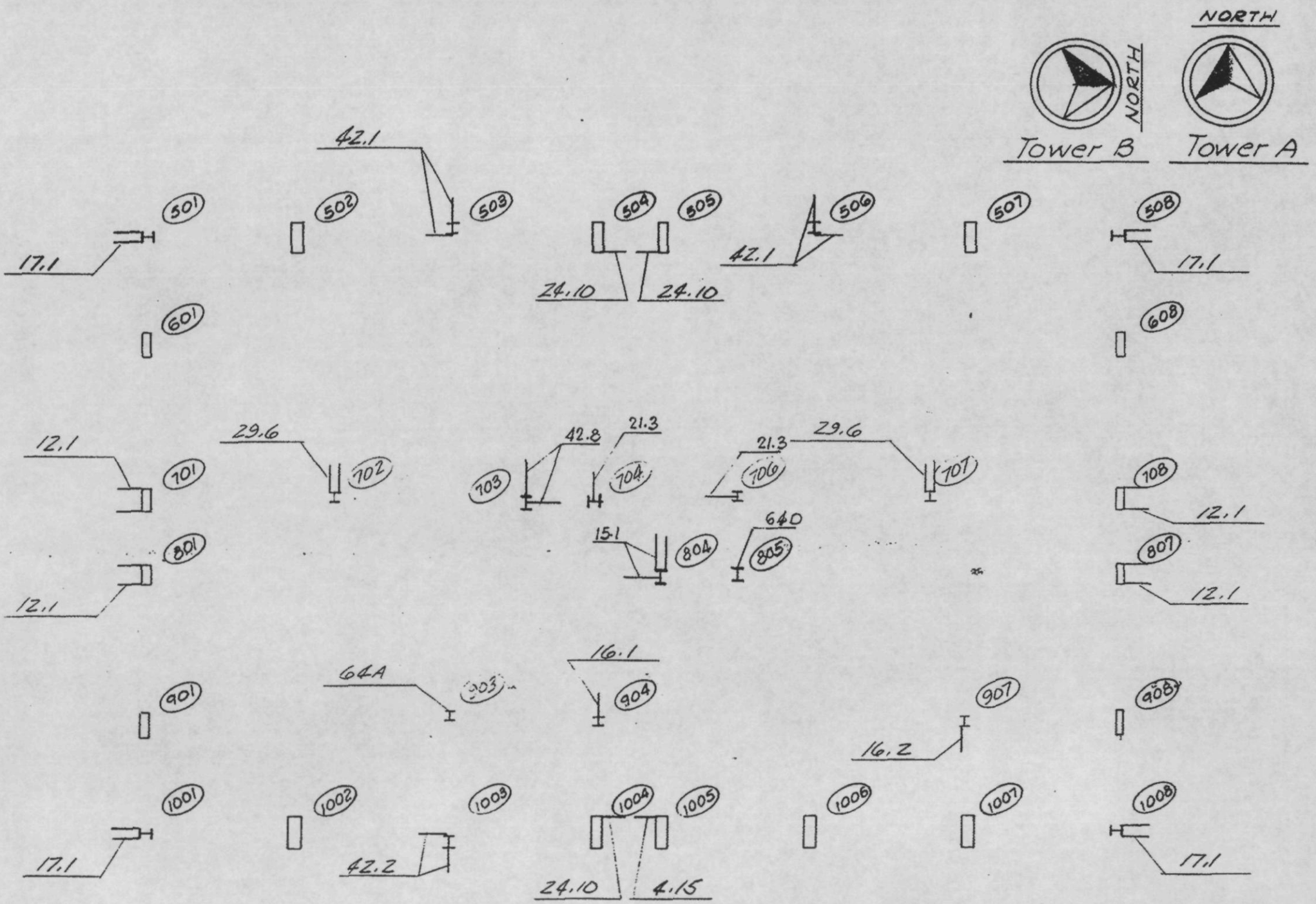

LICENSED PROFESSIONAL ENGINEER
LESLIE E. ROBERTSON
No. 34360
CITY OF THE STATE OF NEW YORK

DRAWN J. Adams

REVIEWED W. Petrewa

18-AB1-50

SKILLING, HELLE, CHRISTIANSEN, ROBERTSON — Structural & Civil Engineers

PROJECT: THE WORLD TRADE CENTER | TITLE: KEY PLAN FOR ANCHOR STRAPS - FL 87-88 | DATE: 4-30-69

REVISIONS

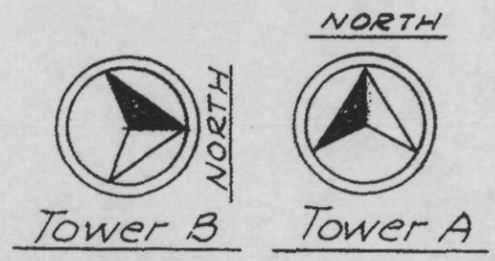

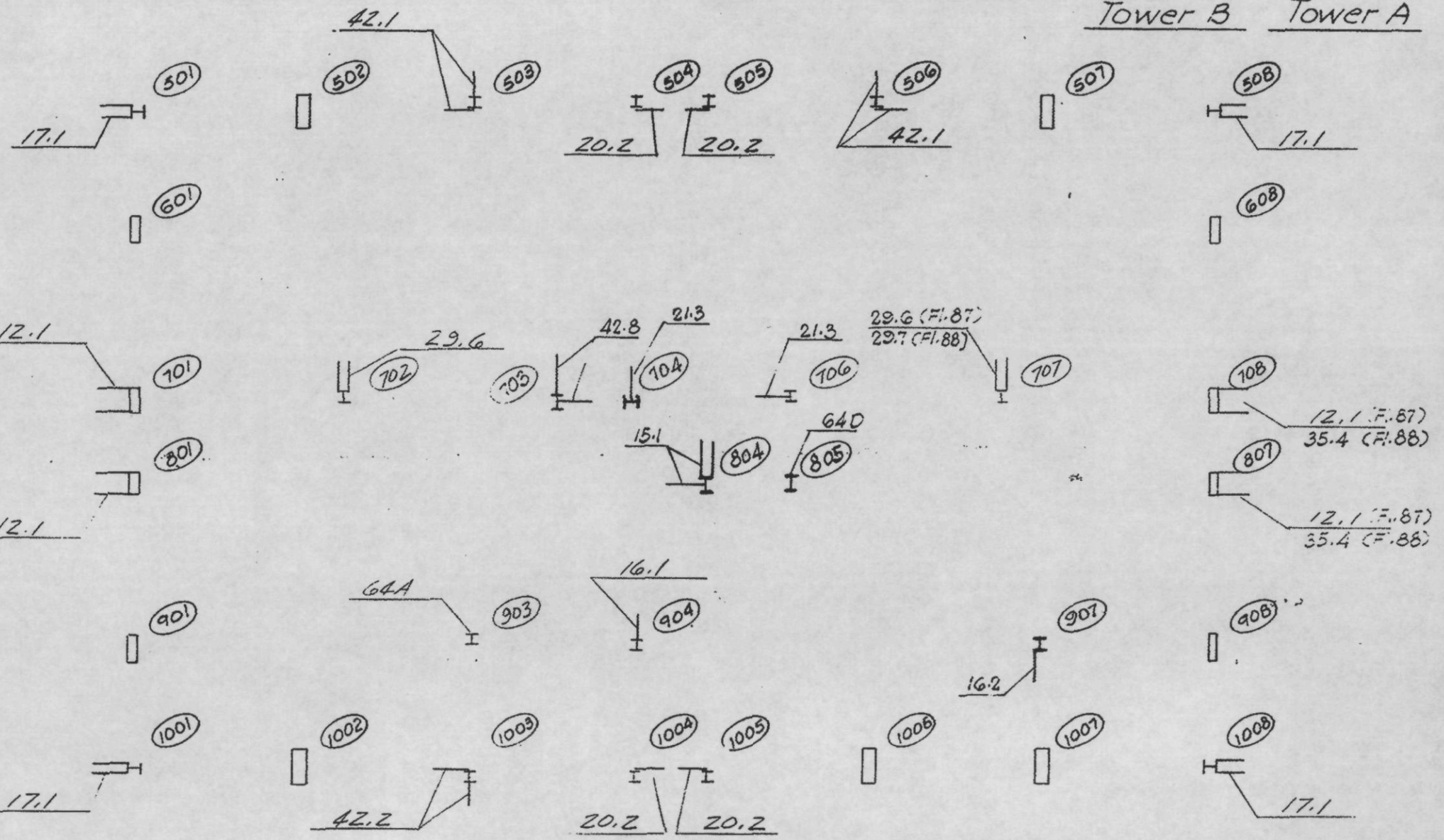

PROFESSIONAL ENGINEER
CHARLIE E. ROBERTSON
No 34360
OF THE STATE OF NEW YORK

DRAWN: Adams
REVIEWED: J. Brewer

18-A81-51

SKILLING, HELLE, CHRISTIANSEN, ROBERTSON — Structural & Civil Engineers

PROJECT THE WORLD TRADE CENTER | TITLE KEY PLAN FOR ANCHOR STRAPS - FL 89-92 | DATE 4-30-69

REVISIONS

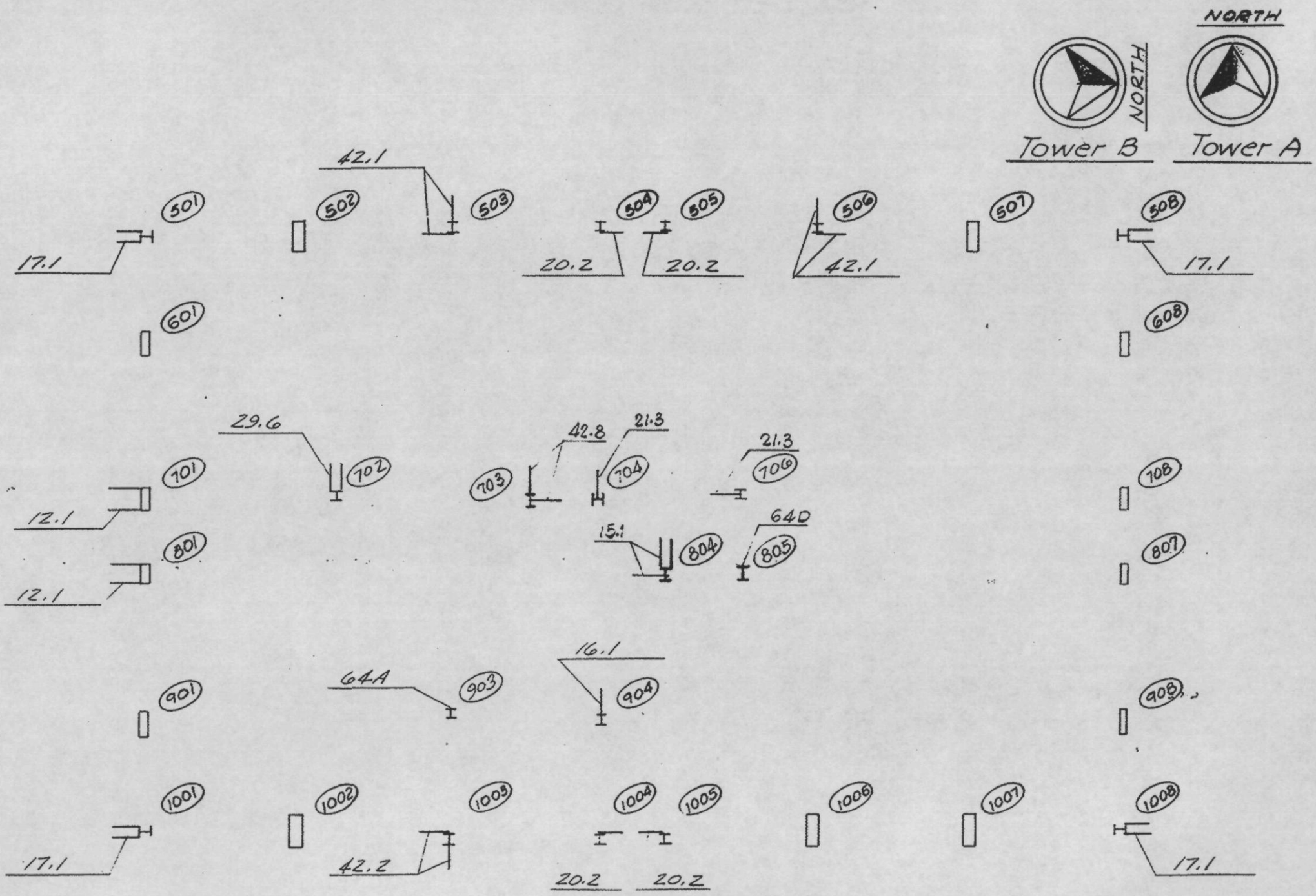

LICENSED PROFESSIONAL ENGINEER
LESLIE E. ROBERTSON
No. 34360
CITY OF THE STATE OF NEW YORK

DRAWN J. Adams

REVIEWED W. B. Lewer

18-AB1-52

SKILLING, HELLE, CHRISTIANSEN, ROBERTSON — Structural & Civil Engineers

PROJECT THE WORLD TRADE CENTER | TITLE KEY PLAN FOR ANCHOR STRAPS - FL 93 | DATE 4-30-69

REVISIONS

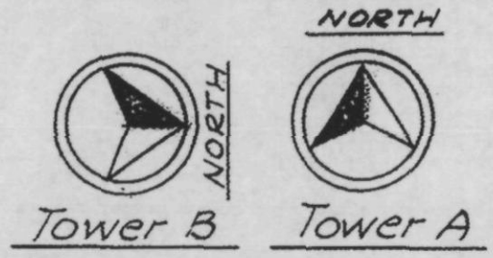

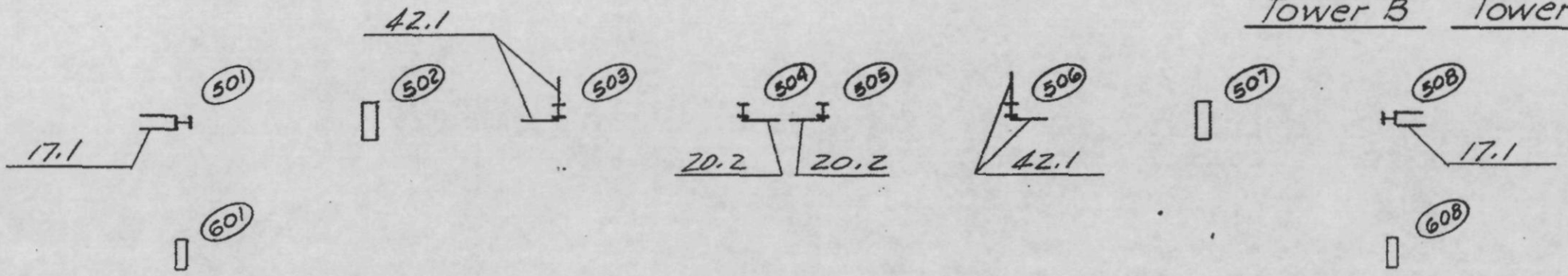

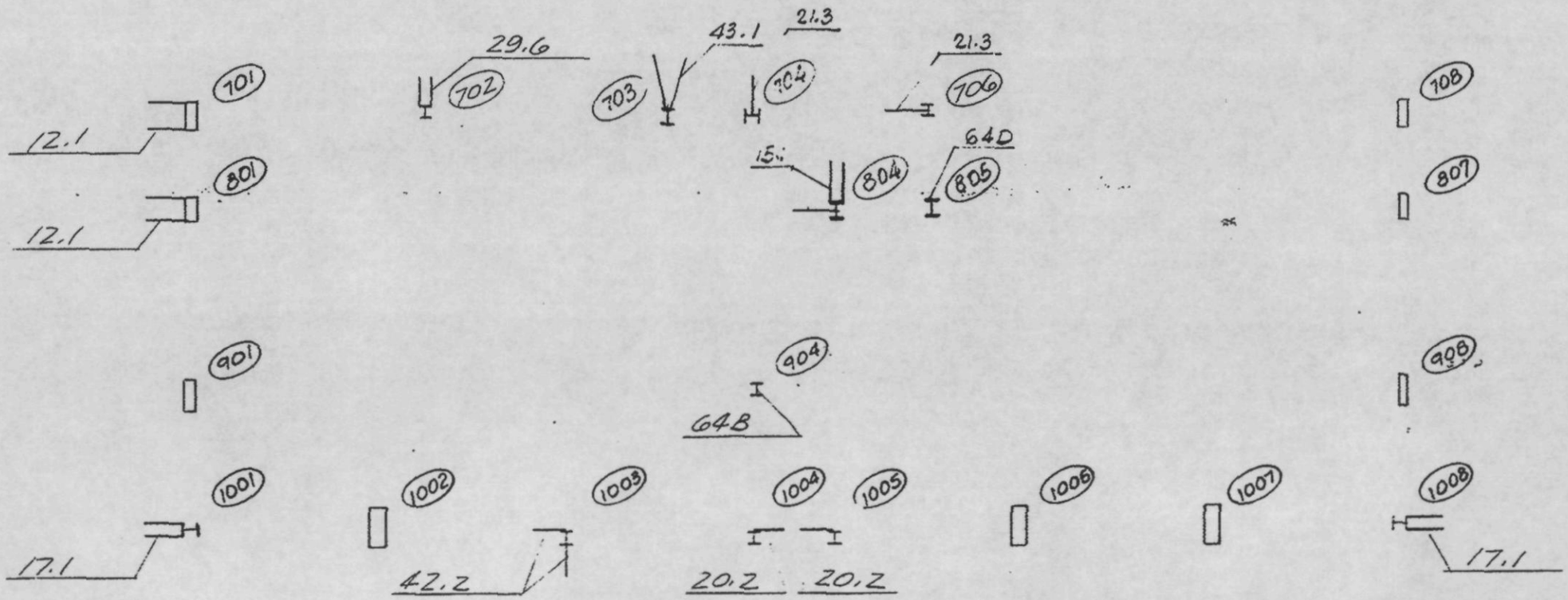

LICENSED PROFESSIONAL ENGINEER
LESLIE E. ROBERTSON
No. 34360
CITY OF THE STATE OF NEW YORK

DESIGNED

DRAWN J. Adams

REVIEWED J. Brewer

18-AB1-53

SKILLING, HELLE, CHRISTIANSEN, ROBERTSON — Structural & Civil Engineers

PROJECT THE WORLD TRADE CENTER | TITLE KEY PLAN FOR ANCHOR STRAPS-FL 94 | DATE 4-30-69

NORTH

NORTH

Tower B

Tower A

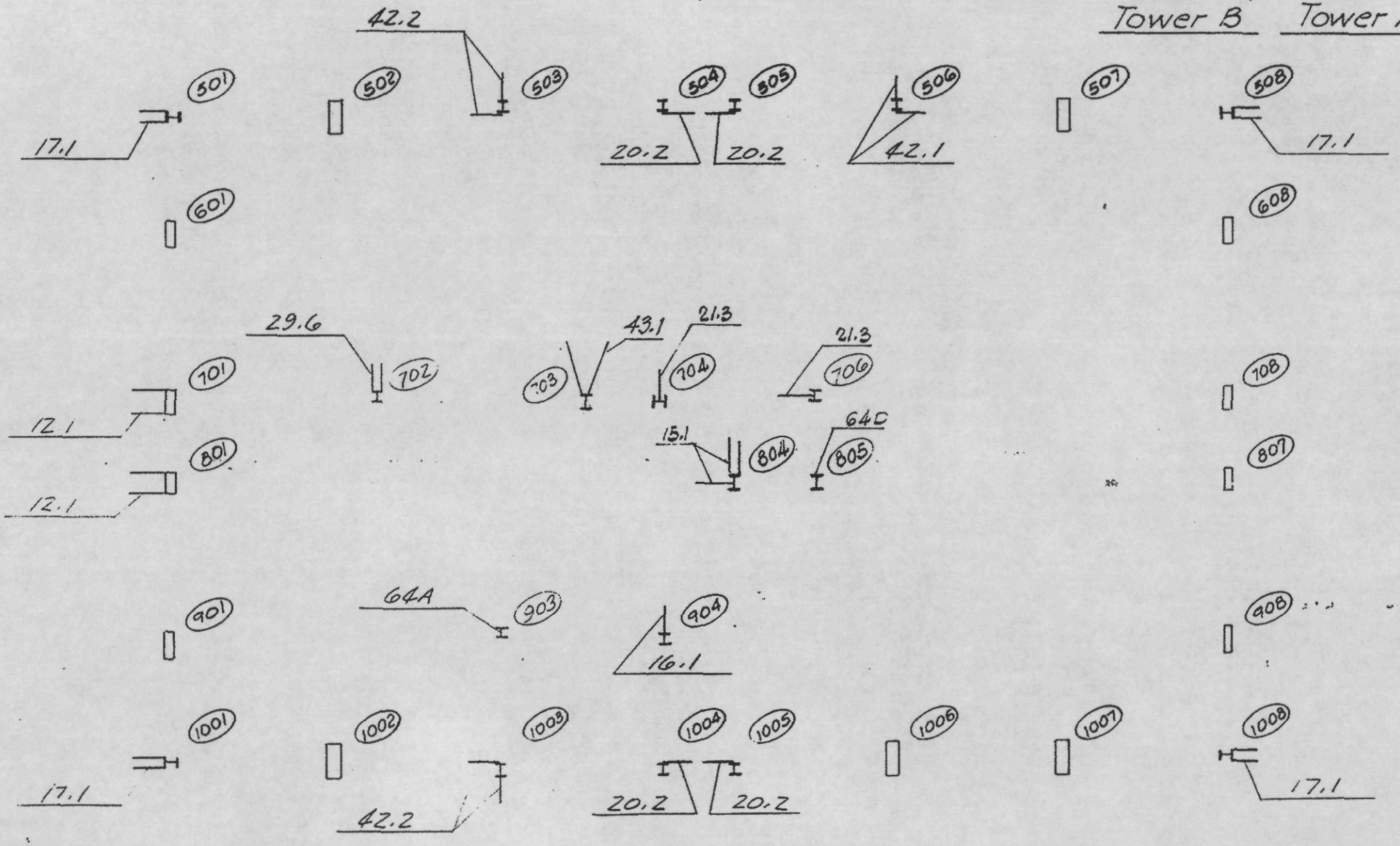

18-481-54

PROFESSIONAL ENGINEER
E. ROBERTSON
NO. 34360
THE STATE OF NEW YORK

DESIGNED

DRAWN Adams

CHECKED

SKILLING, HELLE, CHRISTIANSEN, ROBERTSON — Structural & Civil Engineers

PROJECT THE WORLD TRADE CENTER | TITLE KEY PLAN FOR ANCHOR STRAPS - FL. 95 | DATE 4-30-69

REVISIONS

NORTH

NORTH

Tower B

Tower A

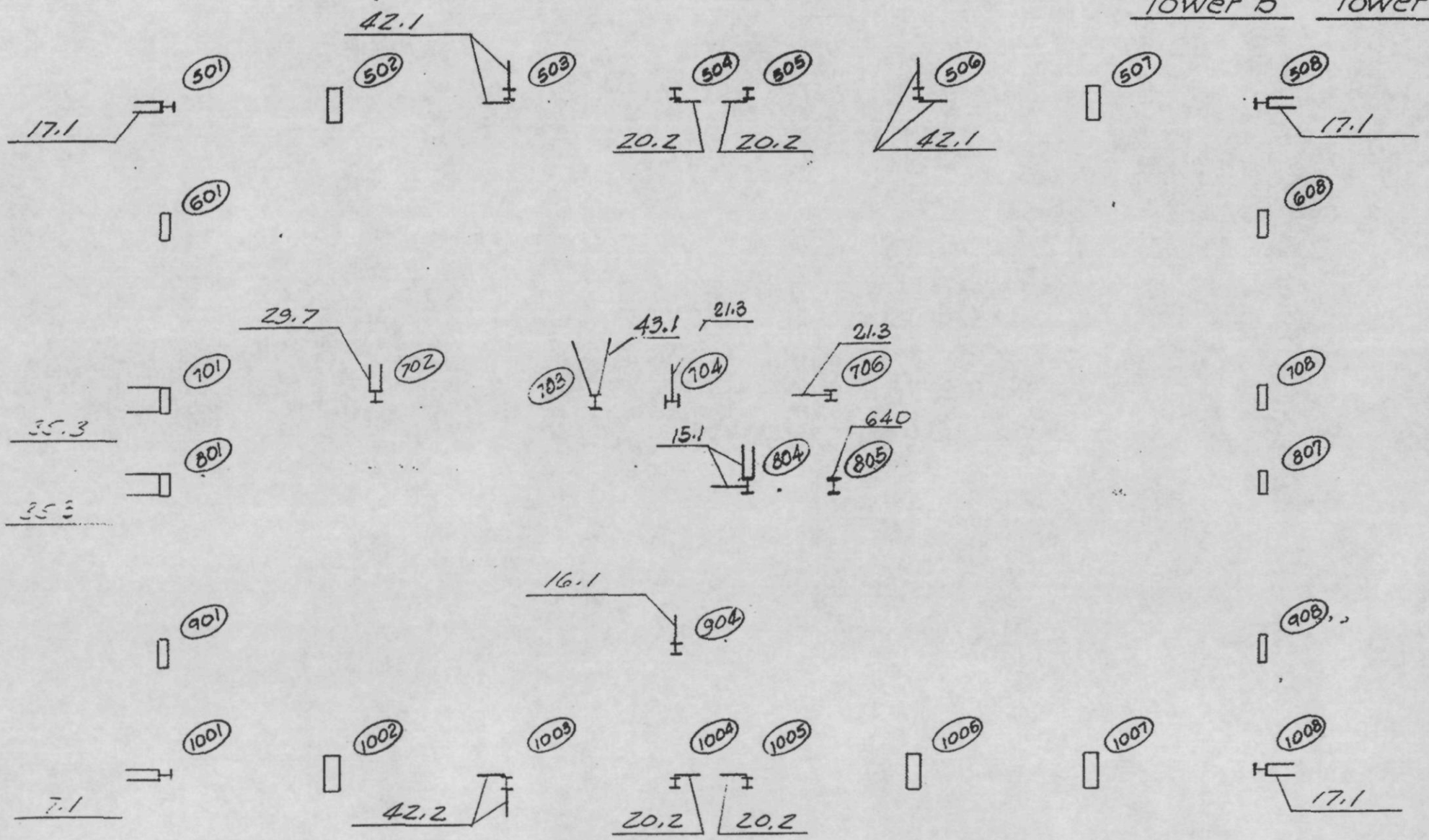

REGISTERED PROFESSIONAL ENGINEER
ALLIE E. ROBERTSON
No. 34360
OF THE STATE OF NEW YORK

DRAWN J. Adams

REVIEWED D. Brewer

18-481-55

SKILLING, HELLE, CHRISTIANSEN, ROBERTSON — Structural & Civil Engineers

PROJECT: THE WORLD TRADE CENTER | TITLE: KEY PLAN FOR ANCHOR STRAPS - FL 96-100 | DATE: 4-30-69

REVISIONS

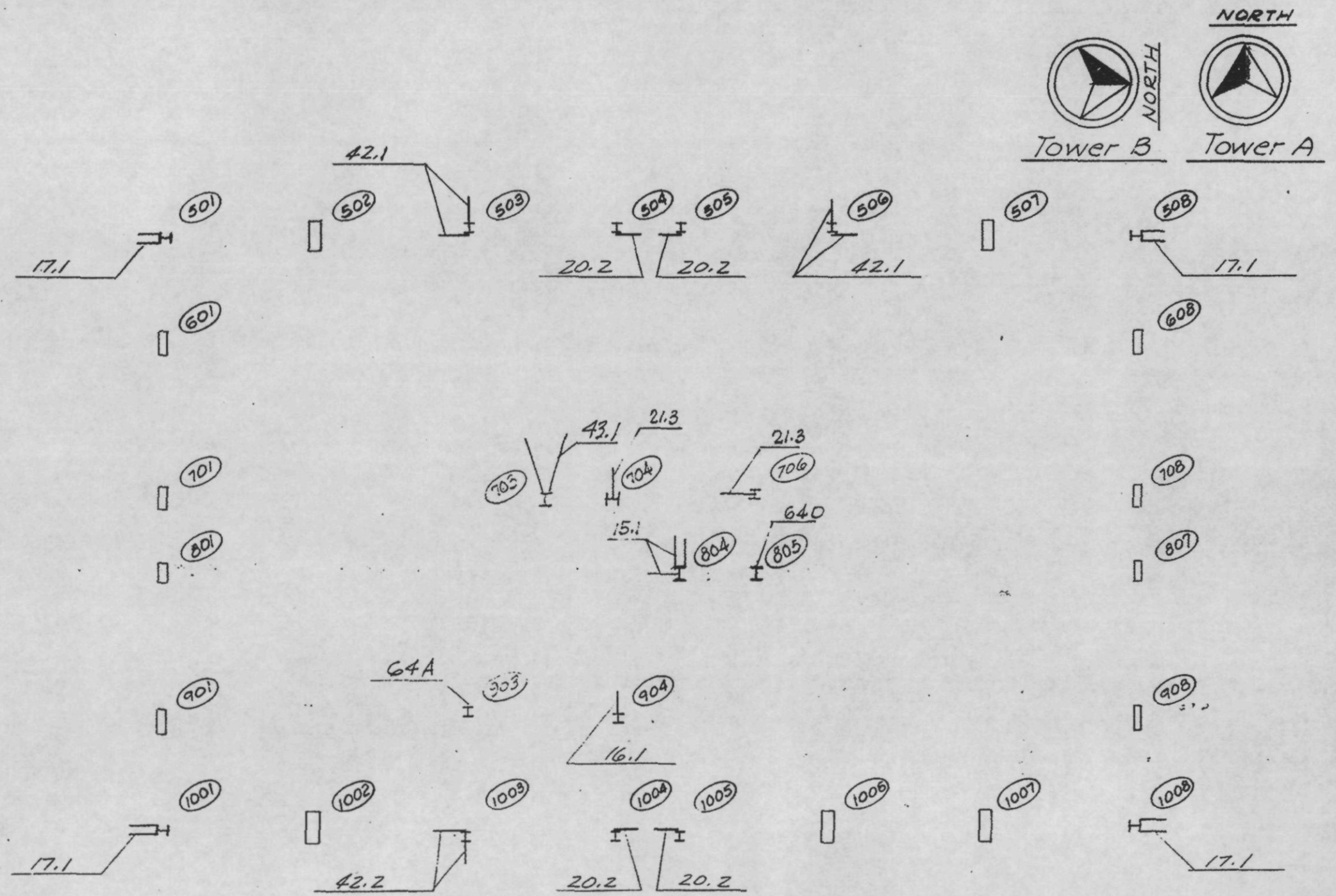

PROFESSIONAL ENGINEER
LIE E. ROBERTSON
No. 34360
OF THE STATE OF NEW YORK

DRAWN J. Adams

REVIEWED W. Brewer

18-AB.-56

SKILLING, HELLE, CHRISTIANSEN, ROBERTSON — Structural & Civil Engineers

PROJECT: THE WORLD TRADE CENTER | TITLE: KEY PLAN FOR ANCHOR STRAPS - FL 101 | DATE: 4-30-69

REVISIONS

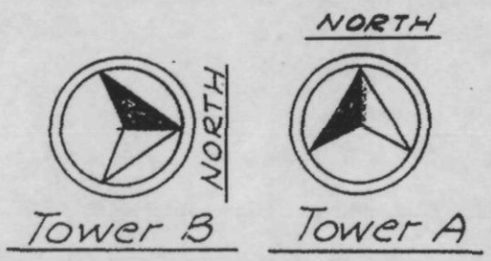

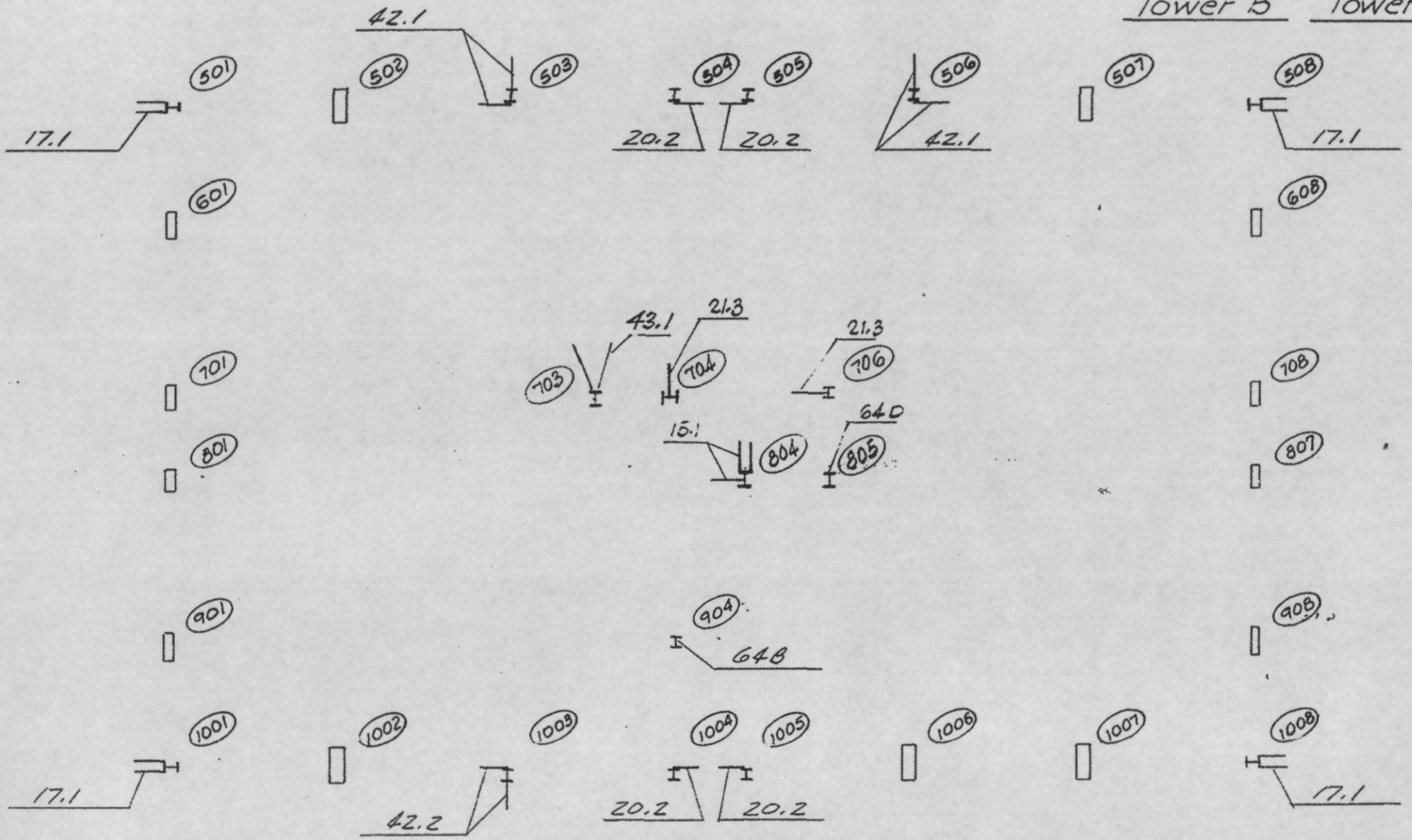

PROFESSIONAL ENGINEER
LIE E. ROBERTSON
No. 34360
OF THE STATE OF NEW YORK

DRAWN
J. Adams

REVIEWED
D. Brewer

18-AB'-57

PROJECT THE WORLD TRADE CENTER | TITLE KEY PLAN FOR ANCHOR STRAPS-FL 102-104 | DATE 4-30-69

REVISIONS

NORTH

NORTH

Tower B

Tower A

42.1

501 502 503 504 505 506 507 508

17.1 20.2 20.2 42.1 17.1

601 608

43.1 (Fl. 102

21.3 (Fl. 102 #103 ONLY)

21.4 (Fl. 104)

21.3

703 704 706

29.8 (Fl. 104 ONLY)

64C 64E 64D

701 708

801 803 804 805 807

64A

42.4 (Fl. 102)

16.1 (Fl. 103-104)

901 903 904 908

1001 1002 1003 1004 1005 1006 1007 1008

17.1 42.2 20.2 20.2 17.1

PROFESSIONAL ENGINEER
J. E. ROBERTSON
No. 34360
OF THE STATE OF NEW YORK

DESIGNED

J. Adams

REVIEWED

J. Brewer

8-AB1-58

SKILLING, HELLE, CHRISTIANSEN, ROBERTSON — Structural & Civil Engineers

PROJECT THE WORLD TRADE CENTER | TITLE KEY PLAN FOR ANCHOR STRAPS - FL 105 | DATE 7-14-69

REVISIONS

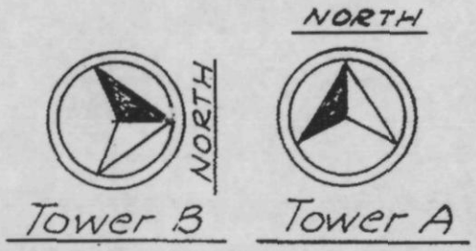

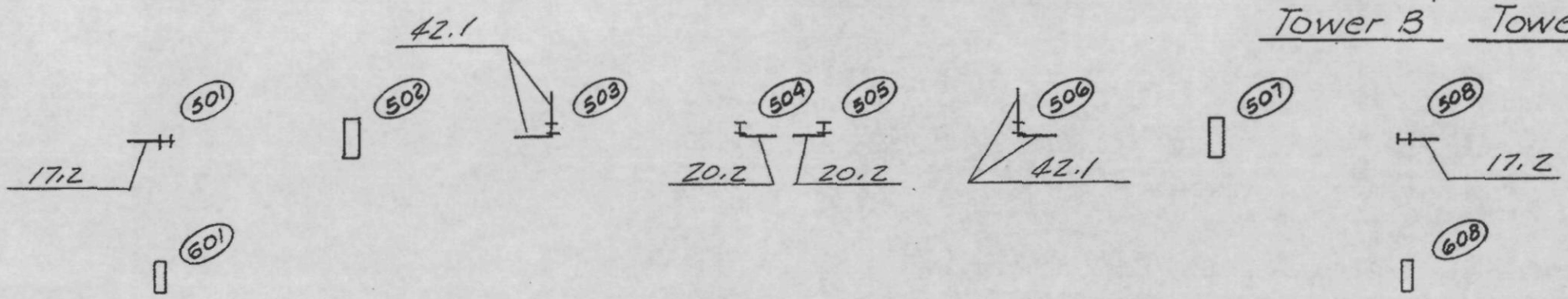

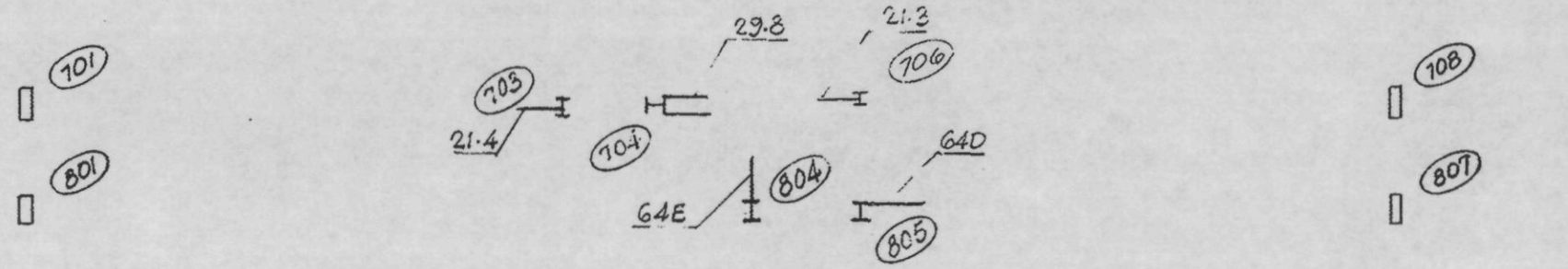

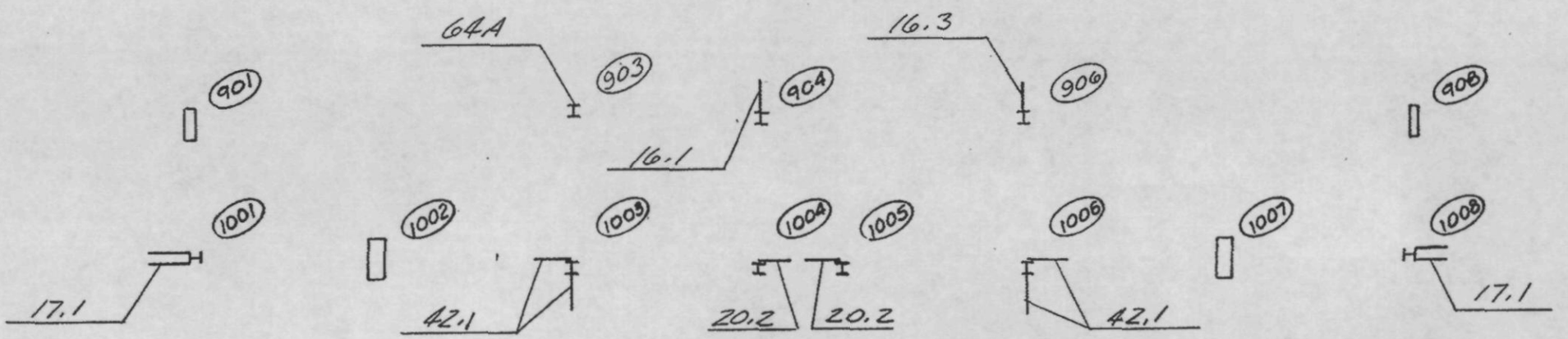

LICENSED PROFESSIONAL ENGINEER
LESLIE E. ROBERTSON
No. 34360
UNIVERSITY OF THE STATE OF NEW YORK

DESIGNED

DRAWN

REVIEWED

18-A81-59

SKILLING, HELLE, CHRISTIANSEN, ROBERTSON — Structural & Civil Engineers

PROJECT THE WORLD TRADE CENTER | TITLE KEY PLAN FOR ANCHOR STRAPS-FL 106 | DATE 7-14-69

REVISIONS

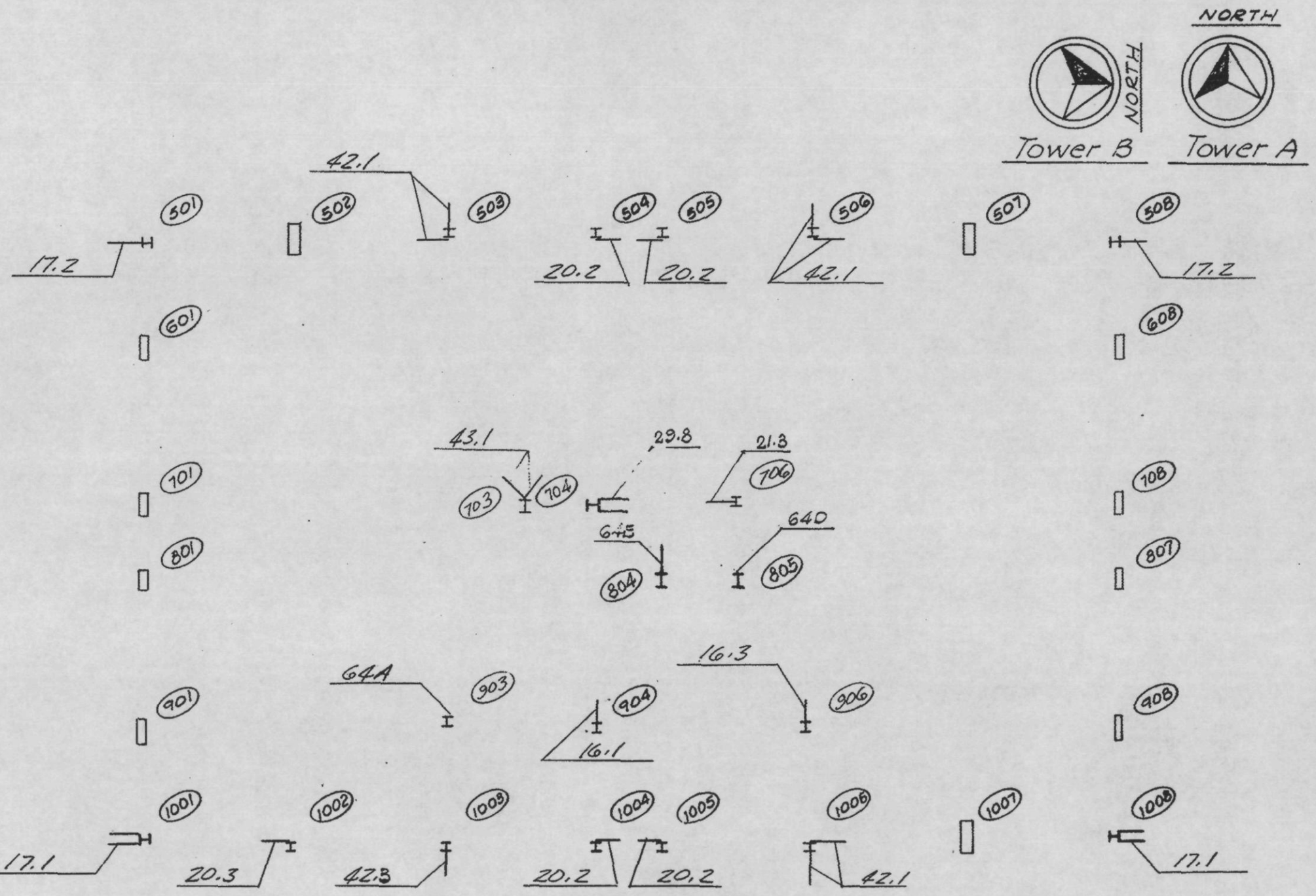

LICENSED PROFESSIONAL ENGINEER
LESLIE E. ROBERTSON
No. 34360
UNIVERSITY OF THE STATE OF NEW YORK

DESIGNED

DRAWN

REVIEWED

18-AB1-60

SKILLING, HELLE, CHRISTIANSEN, ROBERTSON — **Structural & Civil Engineers**

PROJECT	TITLE	DATE
THE WORLD TRADE CENTER	ANCHOR STRAPS - CORE DETAILS - INDEX	10/ 1/69

REVISIONS

10/16/68
10/30/68
2/7/69
4/30/69
5/20/69
5/28/69

18-AB2- 1	INDEX	18-AB2-51.2	DETAIL 51B
18-AB2- 2.1	GENERAL NOTES	18-AB2-52	DETAIL 52
18-AB2- 2.2	TYPICAL DETAILS	18-AB2-53	DETAIL 53
18-AB2- 3	DETAIL 3	18-AB2-54.1	DETAIL 54A
18-AB2- 4	DETAIL 4	18-AB2-54.2	DETAIL 54B & C
18-AB2- 5	DETAIL 5	18-AB2-55	DETAIL 55
18-AB2- 6	DETAIL 6	18-AB2-56	DETAIL 56
18-AB2- 7	DETAIL 7	18-AB2-57.1	DETAIL 57A&B
18-AB2- 8	DETAIL 8	18-AB2-57.2	DETAIL 57C&D
18-AB2- 9	DETAIL 9	18-AB2-57.3	DETAIL 57E&F
18-AB2-10	DETAIL 10	18-AB2-57.4	DETAIL 57G&H
18-AB2-11	DETAIL 11	18-AB2-58	DETAIL 58
18-AB2-12	DETAIL 12	18-AB2-59	DETAIL 59
18-AB2-13	DETAIL 13	18-AB2-60	DETAIL 60
18-AB2-14	DETAIL 14	18-AB2-61	DETAIL 61
18-AB2-15	DETAIL 15	18-AB2-62.1	DETAIL 62ABC
18-AB2-16	DETAIL 16	18-AB2-62.2	DETAIL 62DE
18-AB2-17	DETAIL 17	18-AB2-63	DETAIL 63
18-AB2-18	DETAIL 18	18-AB2-64.1	DETAIL 64ABCD
18-AB2-19	DETAIL 19	18-AB2-64.2	DETAIL 64EF
18-AB2-20	DETAIL 20	18-AB2-65	DETAIL 65
18-AB2-21	DETAIL 21	18-AB2-66.1	DETAIL 66AB
18-AB2-22	DETAIL 22	18-AB2-66.2	DETAIL 66CD
18-AB2-23	DETAIL 23	18-AB2-66.3	DETAIL 66EF
18-AB2-24	DETAIL 24	18-AB2-67.1	DETAIL 67AB
18-AB2-25	DETAIL 25	18-AB2-67.2	DETAIL 67CD
18-AB2-26	DETAIL 26	18-AB2-68	DETAIL 68
18-AB2-27	DETAIL 27	18-AB2-69.1	DETAIL 69
18-AB2-28	DETAIL 28	18-AB2-69.2	DETAIL 69
18-AB2-29	DETAIL 29	18-AB2-70	DETAIL 70
18-AB2-30	DETAIL 30	18-AB2-71	DETAIL 71
18-AB2-31	DETAIL 31	18-AB2-72	DETAIL 72
18-AB2-32	DETAIL 32	18-AB2-73	DETAIL 73
18-AB2-33	DETAIL 33	18-AB2-74.1	DETAIL 74
18-AB2-34	DETAIL 34	18-AB2-74.2	DETAIL 74
18-AB2-35	DETAIL 35	18-AB2-75	DETAIL 75
18-AB2-36	DETAIL 36	18-AB2-76	DETAIL 76
18-AB2-37	DETAIL 37A,B,C	18-AB2-77.1	DETAIL 77
18-AB2-38	DETAIL 38	18-AB2-77.2	DETAIL 77
18-AB2-39	DETAIL 39	18-AB2-78	DETAIL 78
18-AB2-40	DETAIL 40	18-AB2-79.1	DETAIL 79
18-AB2-41	DETAIL 41	18-AB2-79.2	DETAIL 79
18-AB2-42.1	DETAIL 42	18-AB2-80	DETAIL 80
18-AB2-42.2	DETAIL 42	18-AB2-81.1	DETAIL 81
18-AB2-42.3	DETAIL 42	18-AB2-81.2	DETAIL 81
18-AB2-43	DETAIL 43		
18-AB2-44	DETAIL 44		
18-AB2-50.1	DETAIL 50A&B		
18-AB2-50.2	DETAIL 50C,D&E		
18-AB2-51.1	DETAIL 51A		

LICENSED PROFESSIONAL ENGINEER ★ LESLIE E. ROBERTSON ★ No. 34360 ★ UNIVERSITY OF THE STATE OF NEW YORK

SKILLING, HELLE, CHRISTIANSEN, ROBERTSON — Structural & Civil Engineers

PROJECT	TITLE	DATE
THE WORLD TRADE CENTER	STRAP ANCHOR GENERAL NOTES	10/16/68

REVISIONS

2-7-69

1. Straps and back up material to be ASTM A36.
2. All welding to be with E70xx low hydrogen electrodes.
3. Back up material for complete penetration welding not to exceed 1" x ¼".
4. Stud lengths *see table A*
5. Straps rest on steel framing members unless noted (±), measured from reference floor line to top of strap.
6. Strap notation — strap: 6 x ½ x 2-7½, studs: 3 x 5/¾, strap elevation: (-6½) =

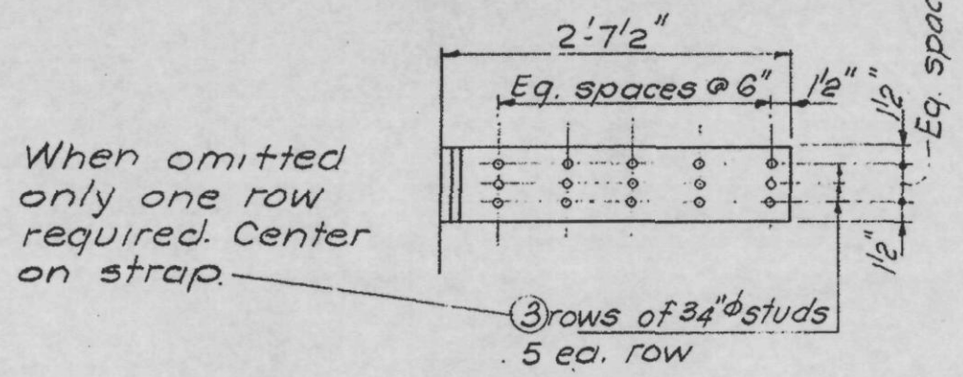

Table A		
Stud Size	Stud length	Shop Dwg Stud Designation
½	2	R 420
⅝	2½	R 524
¾	3	R 630
⅞	3½	R 734

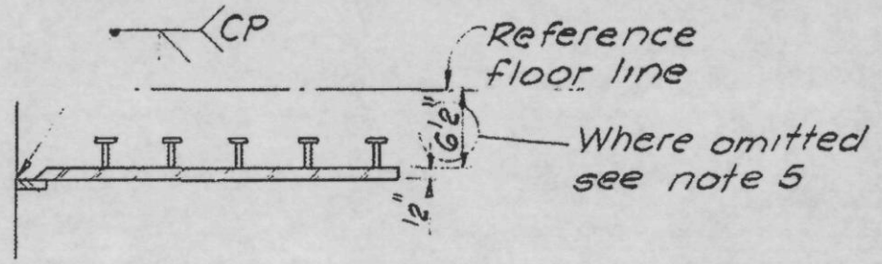

7. See 18-AB1 for Key Plans.

LICENSED PROFESSIONAL ENGINEER — LESLIE E. ROBERTSON — No. 34360 — UNIVERSITY OF THE STATE OF NEW YORK

DESIGNED F. O'Neill
DRAWN S. Wexler
REVIEWED W. Brewer

18-AB2-2.1

SKILLING, HELLE, CHRISTIANSEN, ROBERTSON — Structural & Civil Engineers

PROJECT THE WORLD TRADE CENTER | TITLE STRAP ANCHORS - CORE - TYPICAL DETAILS | DATE 10/30/68

REVISIONS

12-13-68
2-7-69
4-30-69

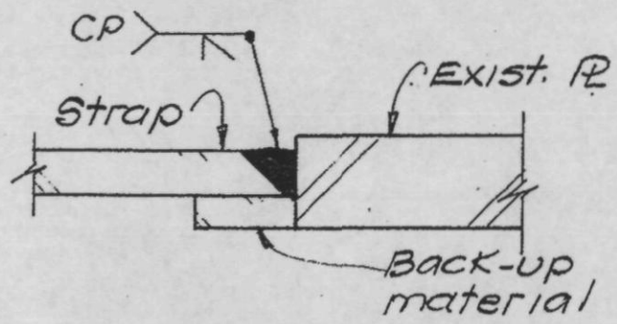

Section a-a

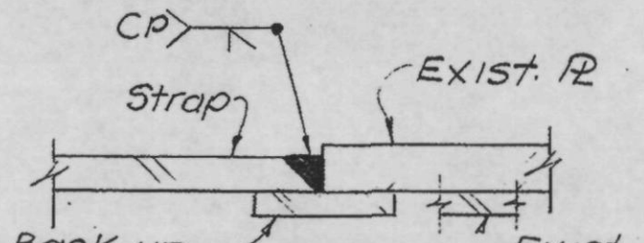

Section b-b

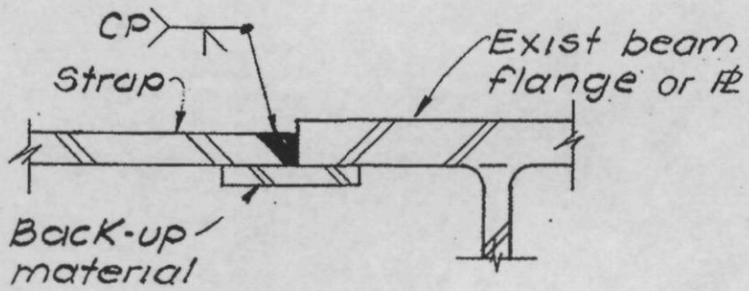

Section c-c

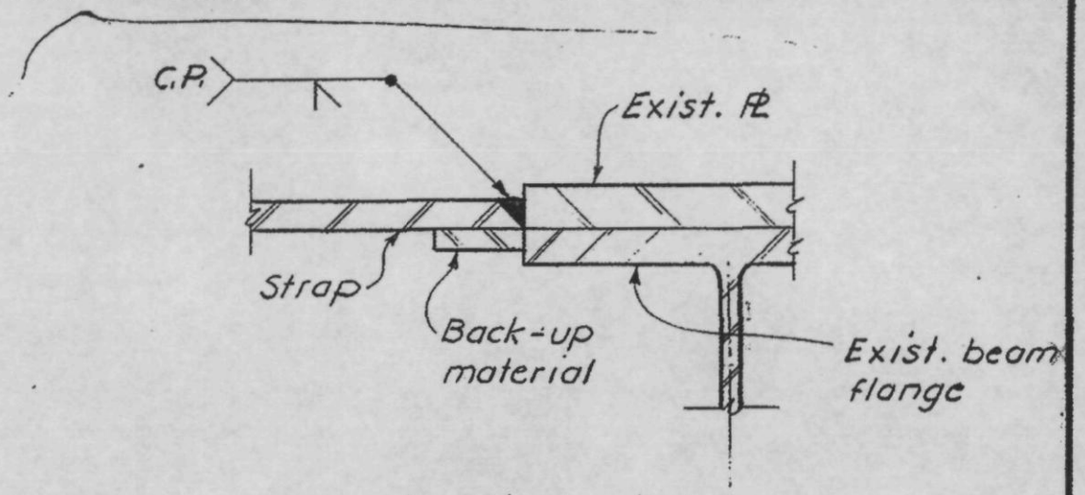

Section d-d

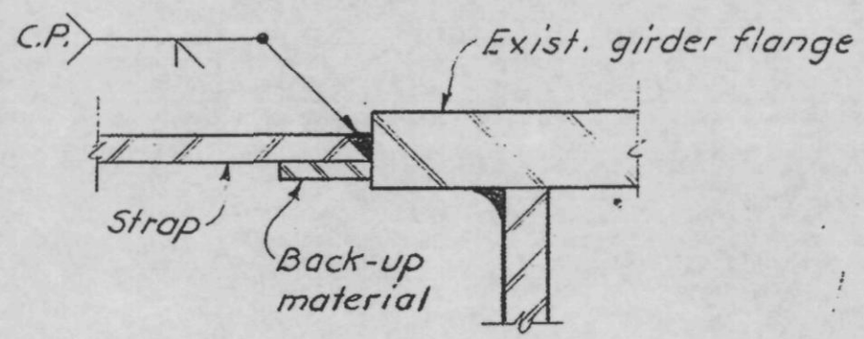

Section e-e

Notes:

1. Back-up material in Section b-b should be shipped loose and field attached to suit existing clearances.

LICENSED PROFESSIONAL ENGINEER — LESLIE E. ROBERTSON — No. 34360 — STATE OF NEW YORK

DESIGNED Y. O'Neill
DRAWN S. Wexler
REVIEWED W. Brewer

18-AB2-2.2

SKILLING, HELLE, CHRISTIANSEN, ROBERTSON — Structural & Civil Engineers

PROJECT THE WORLD TRADE CENTER | TITLE STRAP ANCHORS - CORE - DETAIL 3 | DATE 10/16/68

REVISIONS

10-30-68
12-13-68
4-30-69
5-20-69
5-28-69
10-1-69

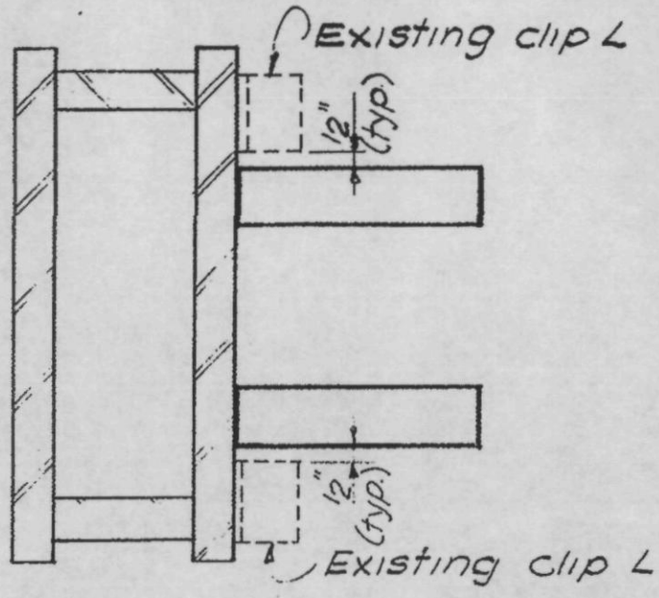

TYPE A

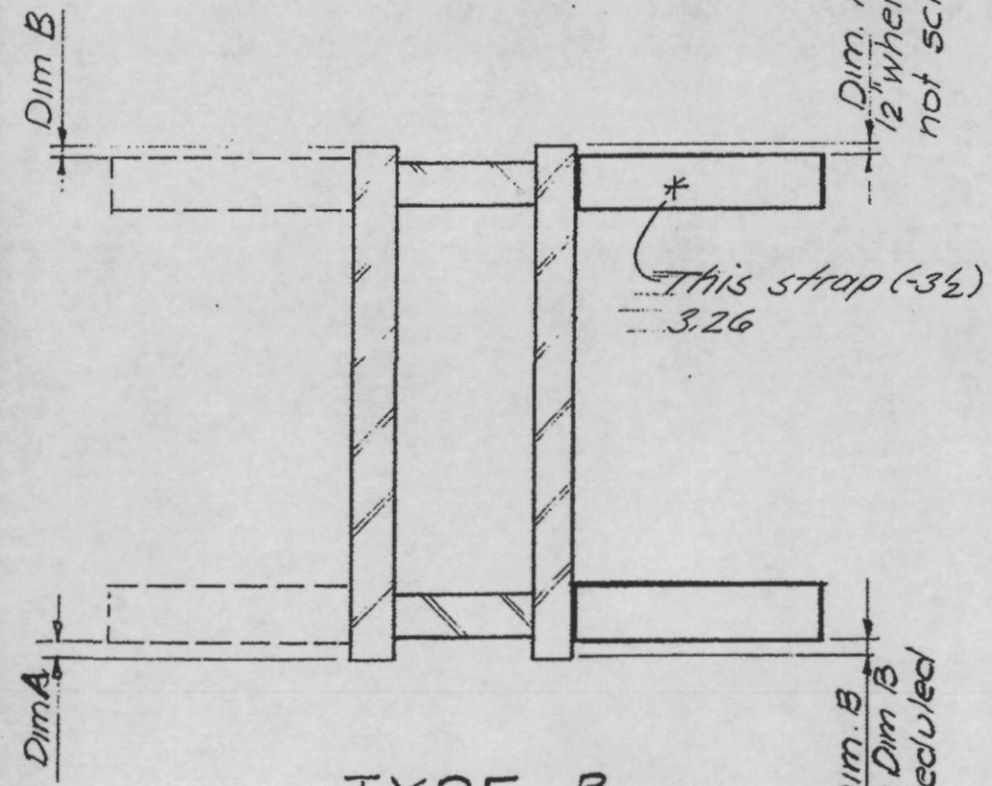

TYPE B

See Note 6 - 18-AB2-2

Detail Nº	Strap	Studs	Elev	Dim. A	Dim B	Type
3.1	4"x 1/2"x2-1/2"	4/3/4	(-9 3/4)	—	—	A
3.2	4x 1/2x1-7/2	3/3/4	(-9 3/4)	—	—	A
3.3	3x 3/8x1'-7/2	3/5/8	(-4)	—	—	B
3.4	3x 3/8x1'-7/2	3/5/8	(-4 1/8)	—	—	B
3.5	6x 1/2x2-1/2	4/7/8	(-4)	—	1/2"	B
3.6	3x 3/8x1'-7/2	3/5/8	—	—	—	A
3.7	4x 3/8x2-1/2	4/5/8	(-3 3/8)	—	—	A
3.8	6x 1/2x 2-7/2	2x5/5/8	(-3 1/4)	1'-3/2"	10	B
3.9	4x 1/2x 2-7/2	5/5/8	(-3 1/4)	—	—	A
3.10	4x 3/4x4-1/2	8/5/8	(-3)	—	—	A
3.11	6x 3/4x3-7/2	2x7/5/8	(-3)	—	—	A
3.12	4x 3/8x2-1/2	4/5/8	—	—	—	A
3.13	4x 3/4x4-1/2	8/5/8	—	—	—	A
3.14	4x 1/2x2-1/2	4/3/4	(-7)	—	—	A
3.15	4x 1/2x1-7/2	3/3/4	—	—	—	A
3.16	4x 3/4x2-1/2	4/7/8	—	—	—	A
3.17	4x 1/2x3-6	6/5/8	(-3 1/2)	—	—	B
3.18	8x 1/2 x4-6	8/3/4	(-3 1/2)	—	—	B
3.19	4x 1/2x3-6	6/5/8	(-5 3/4)	—	—	A
3.20	4x 1/2 x3-6	6/5/8	(-3 1/2)	—	—	A
3.21	4x3/4x 3-0	5/3/4	(-3 3/4)	—	—	B
3.22	4x 1/2 x2-6	4/3/4	(-4)	—	—	B
3.23	4x 1/2 x 2-6	4/3/4	(-7 1/2)	—	—	B
3.24	4x3/4x4-1/2	8/5/8	(-3)	—	—	A
3.25	10x 1/2 x3-6	2x6/3/4	(-4)	—	—	B
3.26	10x 1/2 x3-6	2x6/3/4	(-4)/(-3 1/2)*	—	—	B
3.27	4x 1/2x3-6	2x6/5/8	(-3 1/4)	—	—	A
3.28	3x 3/8x 1'-7 1/2"	3/5/8	(-7 5/8)	—	—	B
3.29	5x 3/4x 3'-6"	6/7/8	(-5 1/4)	—	—	B
3.30	4x 1/2 x 3'-6"	6/5/8	(-5 1/2)	—	2"	B
3.31	8x 1/2 x 3'-0"	2x5/3/4	(-3 1/2)	—	—	B

LICENSED PROFESSIONAL ENGINEER — LESLIE E. ROBERTSON — No. 34360 — UNIVERSITY OF THE STATE OF NEW YORK

DESIGNED L. O'Neil
DRAWN S. Wexler
REVIEWED W. Brewer

18-AB2-3

SKILLING, HELLE, CHRISTIANSEN, ROBERTSON — Structural & Civil Engineers

PROJECT: THE WORLD TRADE CENTER | TITLE: STRAP ANCHORS - CORE - DETAIL 4 | DATE: 10/30/68

REVISIONS

12-13-68
4-30-69
5-20-69
10-1-69

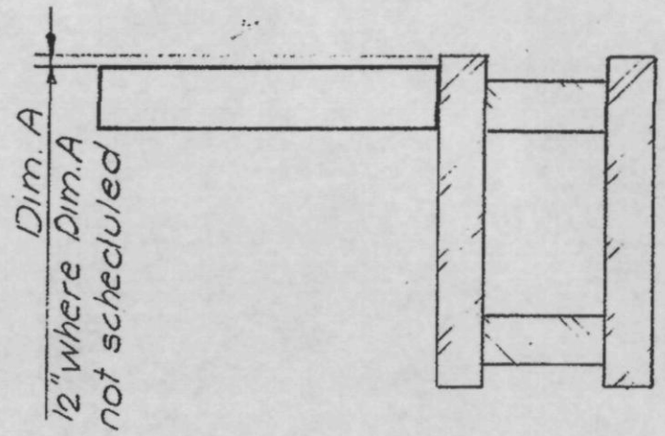

See Note 6-18-AB2-2

Detail No	Strap	Studs	Elev	Dim. A
4.1	4"x1/2"x2'-1 1/2	4/3/4	—	—
4.2	3x3/8x1-7 1/2	3/5/8	(-4 1/8)	—
4.3	5x3/4x5-1 1/2	10/5/8	(-3)	10"
4.4	4x1/2x3-5	7/5/8	(-5 3/4)	2
4.5	3x3/8x1-7 1/2	3/5/8	(-6 1/8)	—
4.6	3x1/2x2-1 1/2	4/3/4	(-6 1/2)	—
4.7	3x3/8x1-7 1/2	3/5/8	(-3 5/8)	—
4.8	3x1/2x2-7 1/2	5/5/8	(-4)	—
4.9	4x1/2x1-7 1/2	3/3/4	(-7 1/2)	—
4.10	3x3/4x2-1 1/2	4/3/4	(-7 1/4)	—
4.11	3x3/8x1-7 1/2	3/5/8	(-4)	5
4.12	3x3/8x1-7 1/2	3/5/8	(-7 5/8)	—
4.13	6x1/2x3'-1 1/2"	6/3/4	(-4)	—
4.14	4x1/2x2'-1 1/2"	4/3/4	(-3 1/2)	—
4.15	3x3/8x2'-1 1/2"	4/5/8	(-4 1/8)	—
4.16	3x3/8x2'-1 1/2"	4/5/8	(-6 5/8)	—
4.17	4x1/2x2-6	4/3/4	(-5 1/2)	—
4.18	4x1/2x3'-5"	7/5/8 (*)	(-5 3/4)	1"
4.19	6x1/2x5'-0"	2x5/5/8	(-3)	1"

* @5 1/2"

LICENSED PROFESSIONAL ENGINEER — LESLIE E. ROBERTSON — No. 34360 — UNIVERSITY OF THE STATE OF NEW YORK

DESIGNED: L. O'Neill
DRAWN: S. Wexler
REVIEWED: W. Brewer

18-AB2-4

SKILLING, HELLE, CHRISTIANSEN, ROBERTSON — Structural & Civil Engineers

PROJECT THE WORLD TRADE CENTER | TITLE STRAP ANCHORS - CORE - DETAIL 5 | DATE 10/30/68

REVISIONS

4-30-69
5-20-69
5-28-69

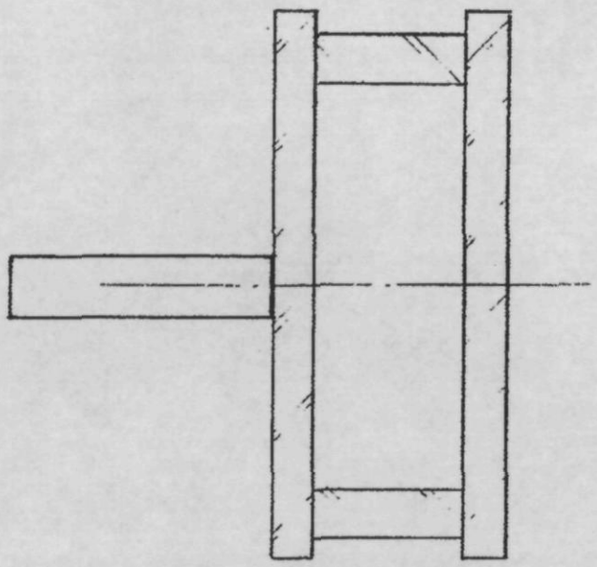

TYPE A

See Note 6 18-AB2-2

Detail No.	Strap	Studs	Elev	Type	Dimen "A"
5.1	21x1/2x1-1/2	4x2/3/4	—	A	—
5.2	27x3/4x2-1/2	5x4/5/8	(-3)	A	—
5.3	4x3/8x2-1/2	4/5/8	(-4 1/8)	A	—
5.4	10x1/2x3-1/2	2x6/3/4	(-4)	A	—
5.5	3x3/8x1-6	3/5/8	(-4 1/8)	A	—
5.6	21x3/4x3-7 1/2	4x7/5/8	(-3)	C	1"
5.7	21x3/4x3-7 1/2	4x7/5/8	(-3)	B	1"
5.8	4x1/2x2'-0"	3/3/4	(-7 1/2)	A	-

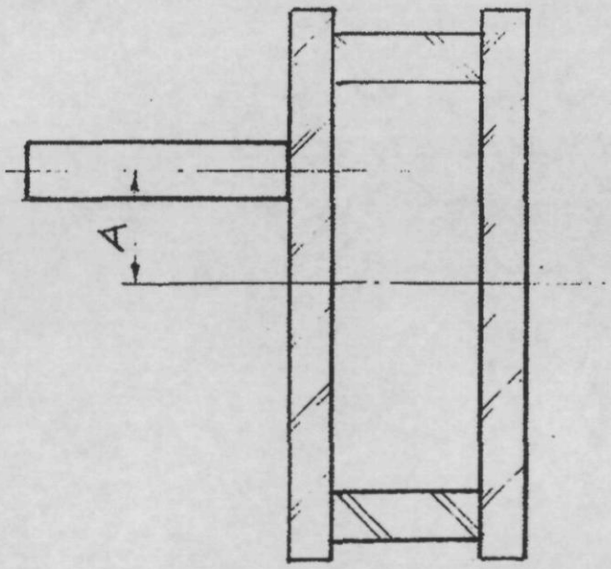

TYPE B

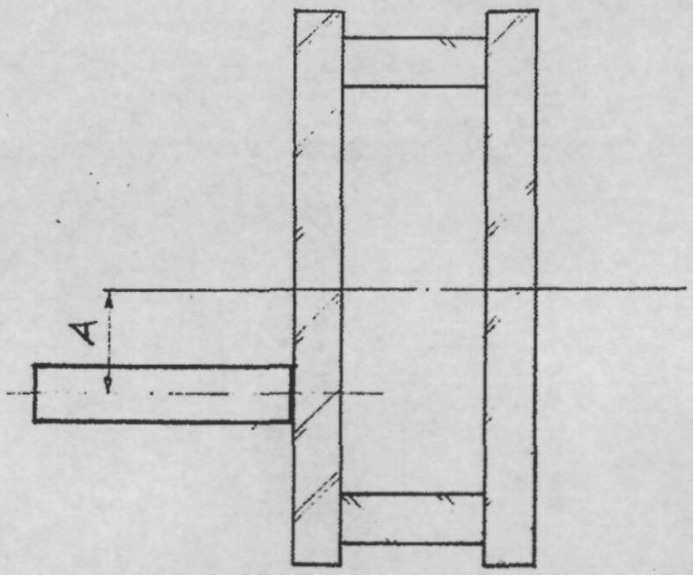

TYPE C

LICENSED PROFESSIONAL ENGINEER
LESLIE E. ROBERTSON
No. 34260
UNIVERSITY OF THE STATE OF NEW YORK

DESIGNED L. O'Neill
DRAWN S. Wexler
REVIEWED W. Brewer

18-AB2-5

SKILLING, HELLE, CHRISTIANSEN, ROBERTSON — Structural & Civil Engineers

PROJECT THE WORLD TRADE CENTER | TITLE STRAP ANCHORS - CORE - DETAIL 6 | DATE 4/30/69

REVISIONS

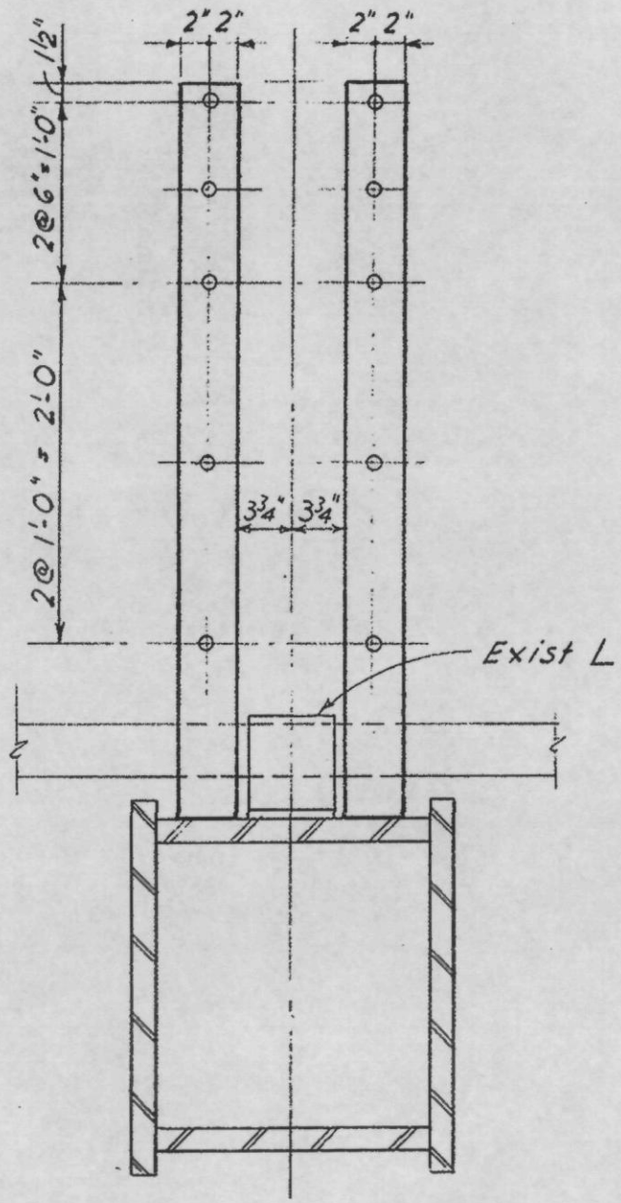

Detail No.	Strap	Studs	
6.1	4"x½"x 4'-1"	⅝"ϕ	(-3½)

LICENSED PROFESSIONAL ENGINEER
LESLIE E. ROBERTSON
No. 34360
UNIVERSITY OF THE STATE OF NEW YORK

DESIGNED

DRAWN F. Smith

REVIEWED W. Brewer

18-AB2-6

SKILLING, HELLE, CHRISTIANSEN, ROBERTSON — Structural & Civil Engineers

PROJECT THE WORLD TRADE CENTER | TITLE STRAP ANCHORS - CORE - DETAIL 7 | DATE 10/30/68

REVISIONS

12-13-68
5-20-69
5-28-69
10-1-69

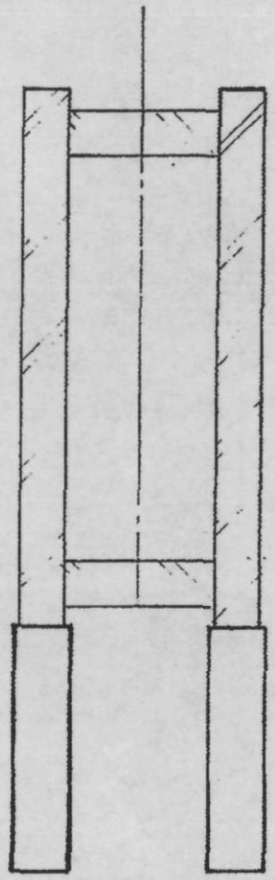

See Note 6-18-AB2-2

Detail No	Strap	Studs	Elev
7.1	5"x1/2"x3'-7 1/2	7/5/8	(-3 1/4)
7.2	3x3/8x1-7 1/2	3/3/4	—
7.3	3x1/2x2-1 1/2	4/5/8	—
7.4	5x5/8x4-1 1/2	8/5/8	(-3 1/8)
7.5	4 1/2x3/4x4-7 1/2	9/5/8	(-3)
7.6	4x5/8x3-7 1/2	7/5/8	(-3 1/8)
7.7	5x3/4x5-1 1/2	10/5/8	(-3)
7.8	3x3/8x1-6 1/2	3/5/8	—
7.9	4x3/4x3-0	5/3/4	(-7 1/2)
7.10	3x1/2x1'-7 1/2"	3/3/4	—
7.11	5x3/4x4'-0"	7/7/8	—
7.12	6x5/8x4'-0"	2x7/5/8	(-3 3/8)

LICENSED PROFESSIONAL ENGINEER — LESLIE E. ROBERTSON — No. 34960 — STATE OF NEW YORK

DESIGNED L. O'Neill
DRAWN S. Wexler
REVIEWED C.W. Brewer

18-AB2-7

SKILLING, HELLE, CHRISTIANSEN, ROBERTSON — Structural & Civil Engineers

PROJECT THE WORLD TRADE CENTER | TITLE STRAP ANCHORS - CORE - DETAIL B. | DATE 10/16/68

REVISIONS

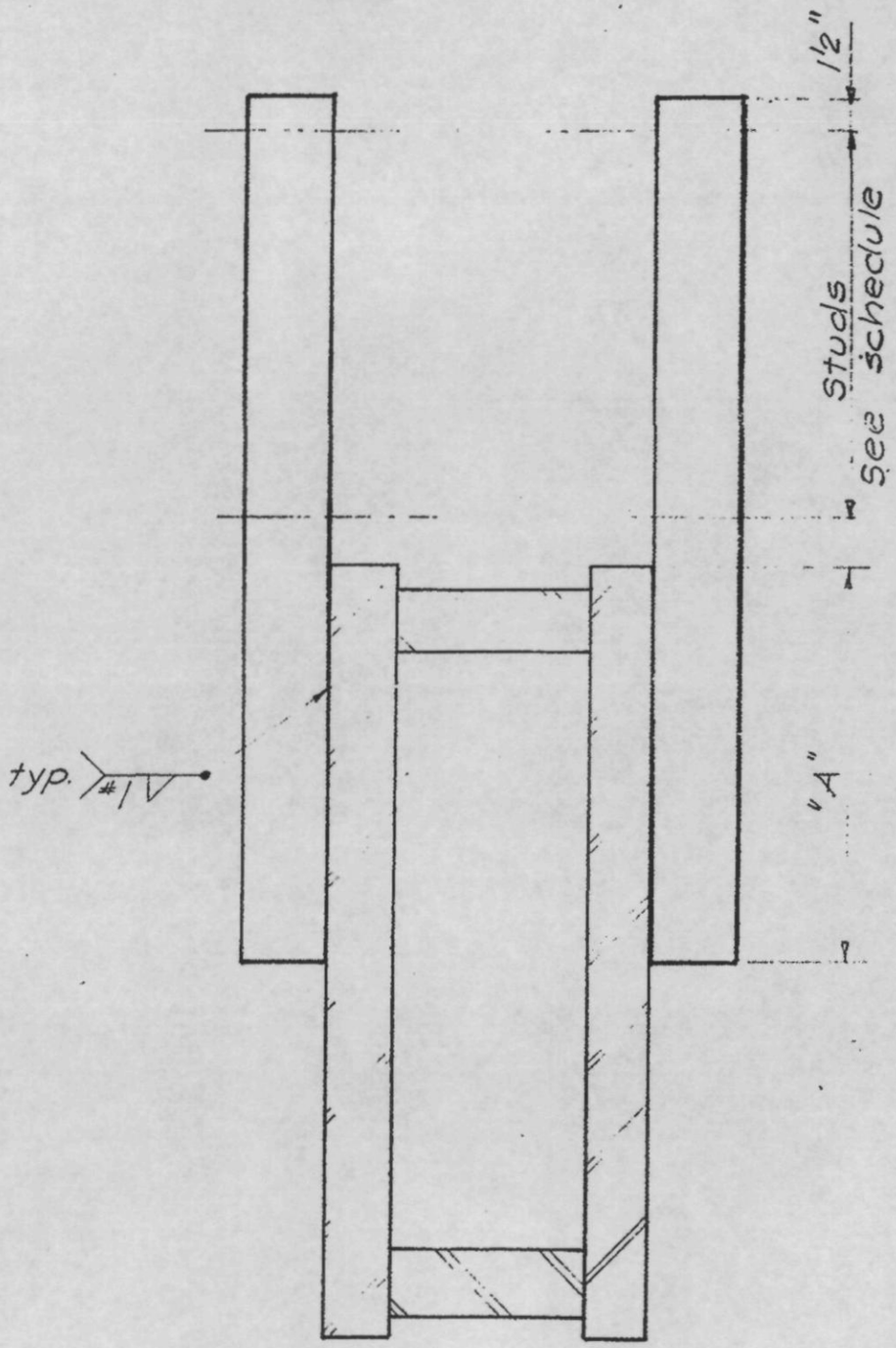

See Note G 18-AB2-2					
Detail No.	Strap	Studs	Elev.	Dimen "A"	Weld No. 1
B.1	6"x7/8"x4'-10 1/2	2x5/3/4	—	2'-3"	1/2
B.2	4x7/8x5-1 1/2	7/3/4	—	1-6	1/2

LICENSED PROFESSIONAL ENGINEER — LESLIE E. ROBERTSON — No. 34360 — UNIVERSITY OF THE STATE OF NEW YORK

DESIGNED F. O'Neill

DRAWN S. Wexler

REVIEWED W. Brewer

18-AB2-B

SKILLING, HELLE, CHRISTIANSEN, ROBERTSON — Structural & Civil Engineers

PROJECT: THE WORLD TRADE CENTER | TITLE: STRAP ANCHORS - CORE - DETAIL 9 | DATE: 10/30/68

REVISIONS

12/13/68
5-20-69
5-28-69
10-1-69

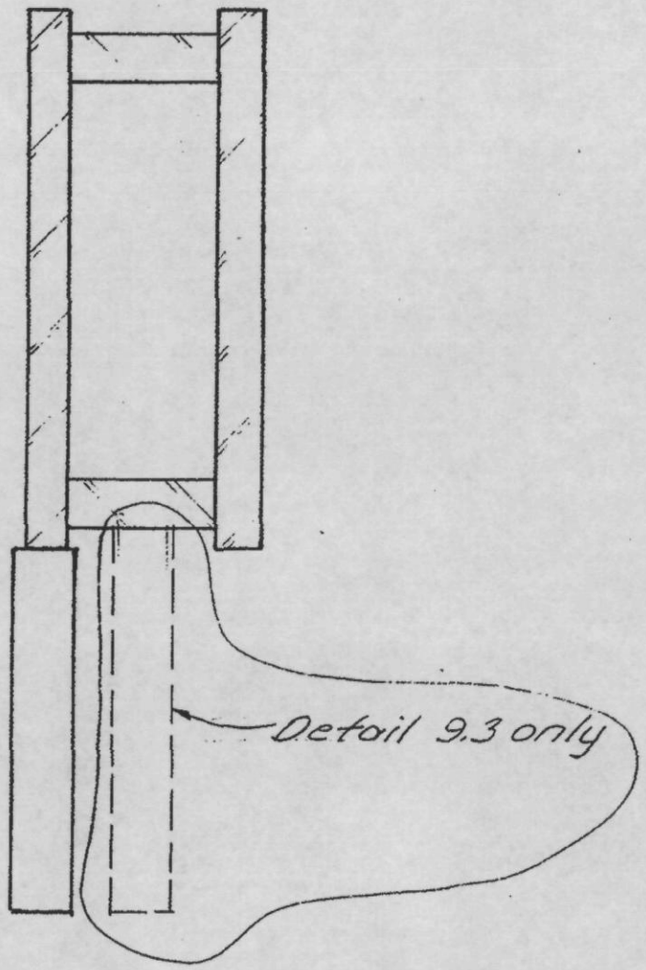

See Note 6 18-AB2-2			
Detail No	Strap	Studs	Elev
9.1	3"x3/4"x2'-7 1/2	5|3/4	(-3 3/4)
9.2	3x3/4x4 4 1/2	8|5/8	(-4)
9.3	3x3/4x4-4 1/2	8|5/8	(-3 1/4)
9.4	3x3/4x3-0	5|5/8	(-7)
9.5	3x3/4x3-6	6|3/4	(-7)

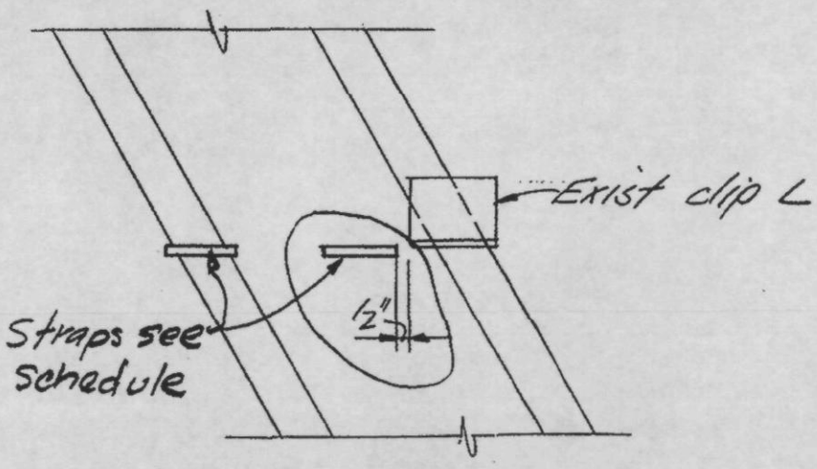

Elev. 9.3

LICENSED PROFESSIONAL ENGINEER — LESLIE E. ROBERTSON — No. 34360 — UNIVERSITY OF THE STATE OF NEW YORK

DESIGNED: T. O'Neill
DRAWN: S. Wexler
REVIEWED: W. Brewer

18-AB2-9

SKILLING, HELLE, CHRISTIANSEN, ROBERTSON — Structural & Civil Engineers

PROJECT: THE WORLD TRADE CENTER | TITLE: STRAP ANCHORS - CORE - DETAIL 10 | DATE: 10-16-68

REVISIONS

-69

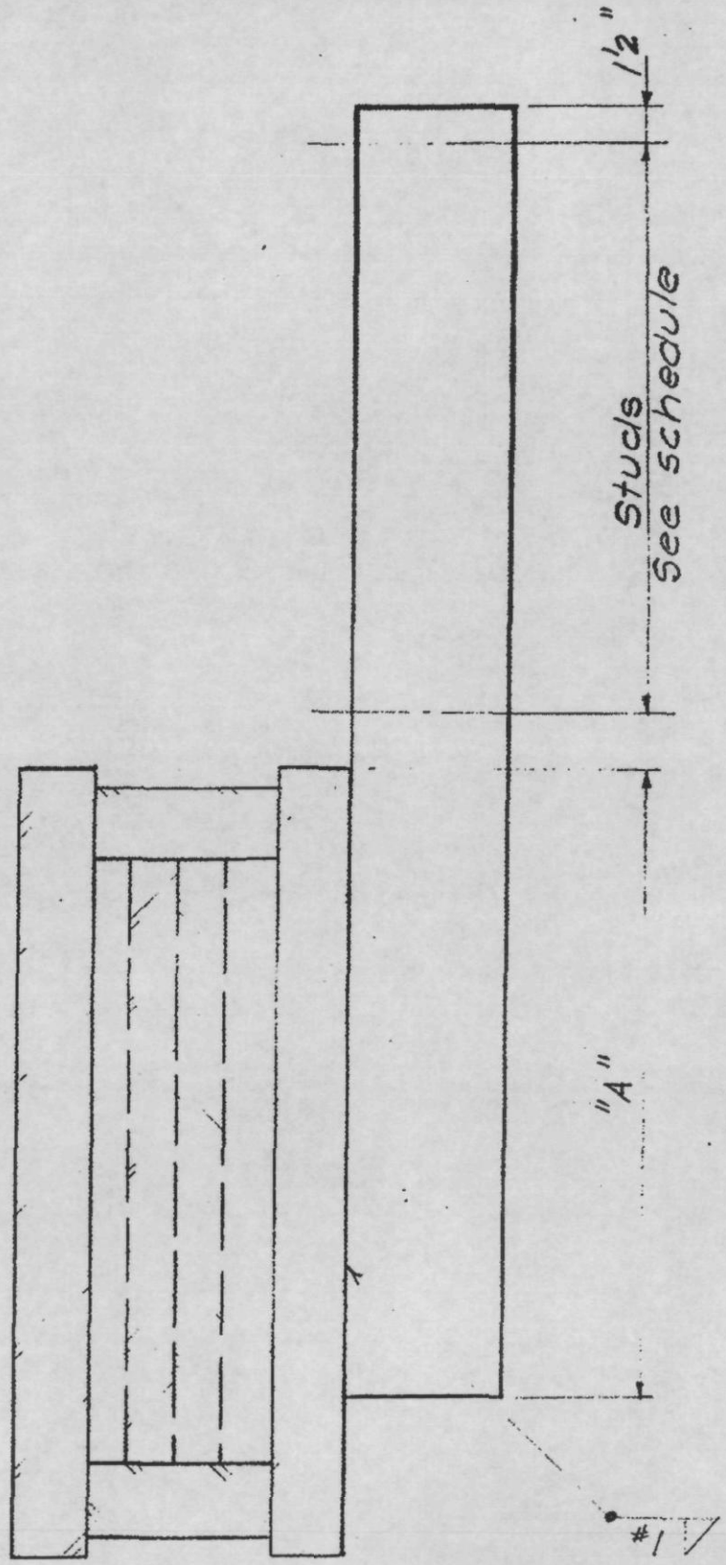

See Note 6 : 18-AB2-2					
Detail No.	Strap	Studs	Elev.	Dimen "A"	Weld #1
10.1	11"x1"x7'-11½"	3x7/¾	—	4'-4"	½
10.2	7x1x5-1½	2x7/¾*	—	2-6	5/8

* Longitudinal spacing 4½"

LICENSED PROFESSIONAL ENGINEER
LESLIE E. ROBERTSON
No. 34360
CITY OF THE STATE OF NEW YORK

DESIGNED: [illegible] Neel

DRAWN: S. Wexler

REVIEWED: W. Brewer

18-AB2-10

SKILLING, HELLE, CHRISTIANSEN, ROBERTSON — Structural & Civil Engineers

PROJECT THE WORLD TRADE CENTER | TITLE STRAP ANCHORS-CORE-DETAIL 11 | DATE 10/30/68

REVISIONS

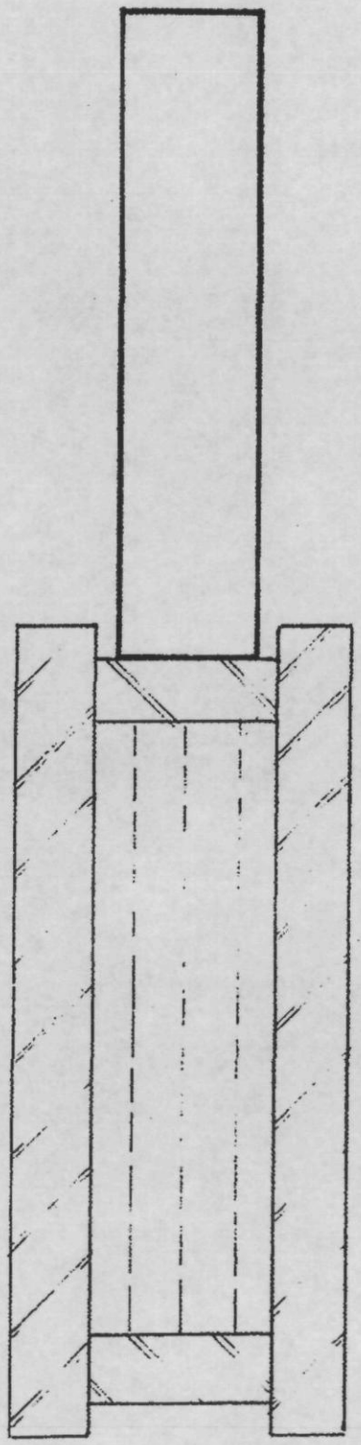

See Note 6 - 18-AB2-2			
Detail No	Strap	Studs	Elev
11.1	10" x 3/4" x 3'-9	3x7/5/8	—

LICENSED PROFESSIONAL ENGINEER
LESLIE E. ROBERTSON
No. 34360
CITY OF THE STATE OF NEW YORK

NED
Neill
DRAWN
Nex. e.
REVIEWED

18-AB2-11

SKILLING, HELLE, CHRISTIANSEN, ROBERTSON — Structural & Civil Engineers

PROJECT: THE WORLD TRADE CENTER

TITLE: STRAP ANCHORS - CORE - DETAIL 12

DATE: 2-1-69

REVISIONS

4-30-69

10-1-69

See Note 6 18-AB 2-2

Detail No.	Strap	Studs	Elev.	Dim. A	Spacing "X"
12.1	4"x½"x4'-6"	5/8"	(-3½)	—	10"
12.2	4"x½"x4'-6"	5/8"	(-3½)	5"	10"
12.3	4"x½"x4'-6"	5/8"	(-3½)	4½"	10"
12.4	4"x½"x3'-9½"	5/8"	(-3½)	—	8"
12.5	4"x½"x3'-9½"	5/8"	(-3½)	5	8"
12.6	4"x½"x3'-9½"	5/8"	(-4¼)	—	8"
12.7	4"x½"x3'-9½"	5/8"	(-3½)	6½"	8"
12.8	4"x½"x3'-9½"	5/8"	(-3½)	9½"	8"
12.9	4"x½"x4'-6"	5/8"	(-3½)	6½"	10"

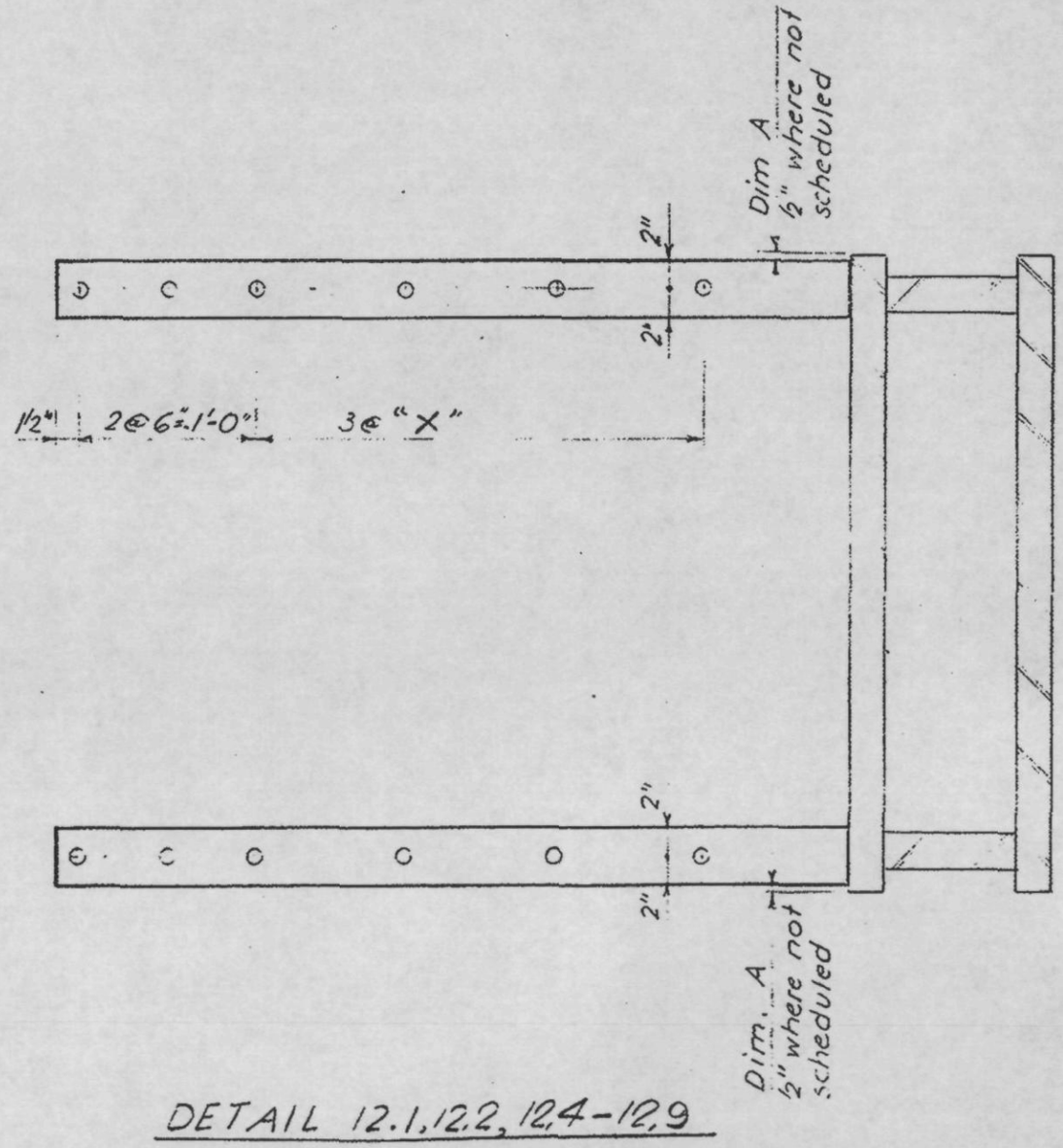

DETAIL 12.1, 12.2, 12.4-12.9

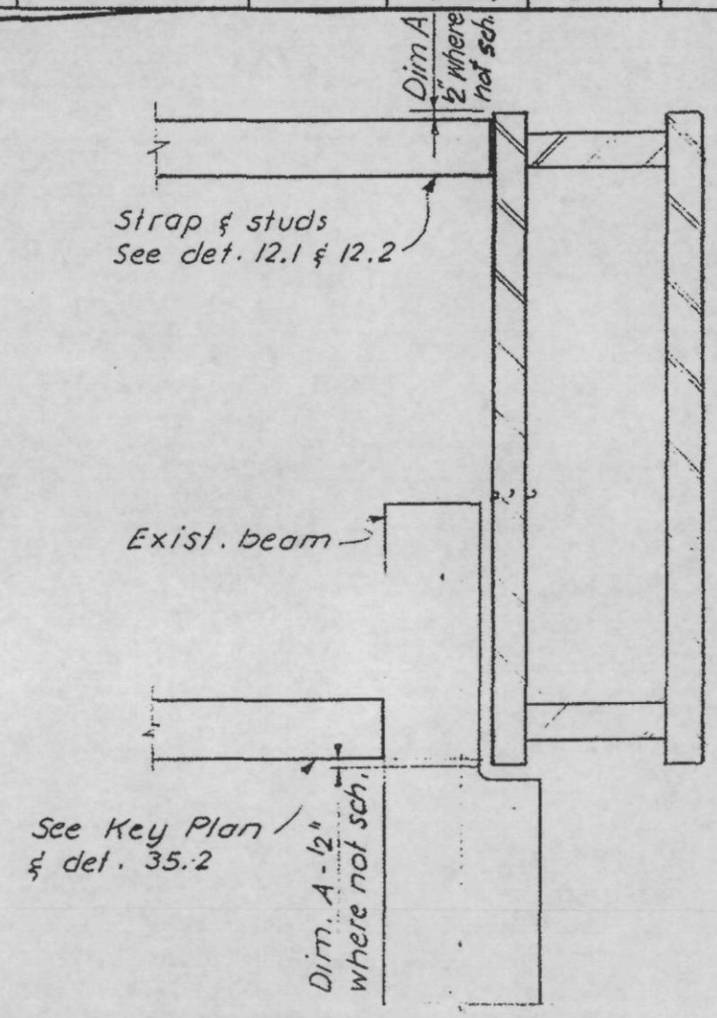

DETAIL 12.3

LICENSED PROFESSIONAL ENGINEER
LESLIE E. ROBERTSON
No. 34360
CITY OF THE STATE OF NEW YORK

DESIGNED: H. Neill

DRAWN: F. Smith

REVIEWED: U. Brewer

18-AB2-12

SKILLING, HELLE, CHRISTIANSEN, ROBERTSON — Structural & Civil Engineers

PROJECT: THE WORLD TRADE CENTER | TITLE: STRAP ANCHOR - CORE - DETAIL 13 | DATE: 2-7-69

REVISIONS

4-30-69
10-1-69

See Note 6 18-AB2-2				
Detail No.	Strap	Studs	Elev.	Spacing "X"
13.1	8"×½"×4'-6"	¾"	(-3½)	8"
13.2	6"×½"×4'-6"	⅝"	(-3½)	8"
13.3	8"×½"×3'-9½"	¾"	(-3½)	7"
13.4	6"×½"×4'-6"	⅝"	(-3½)	8"

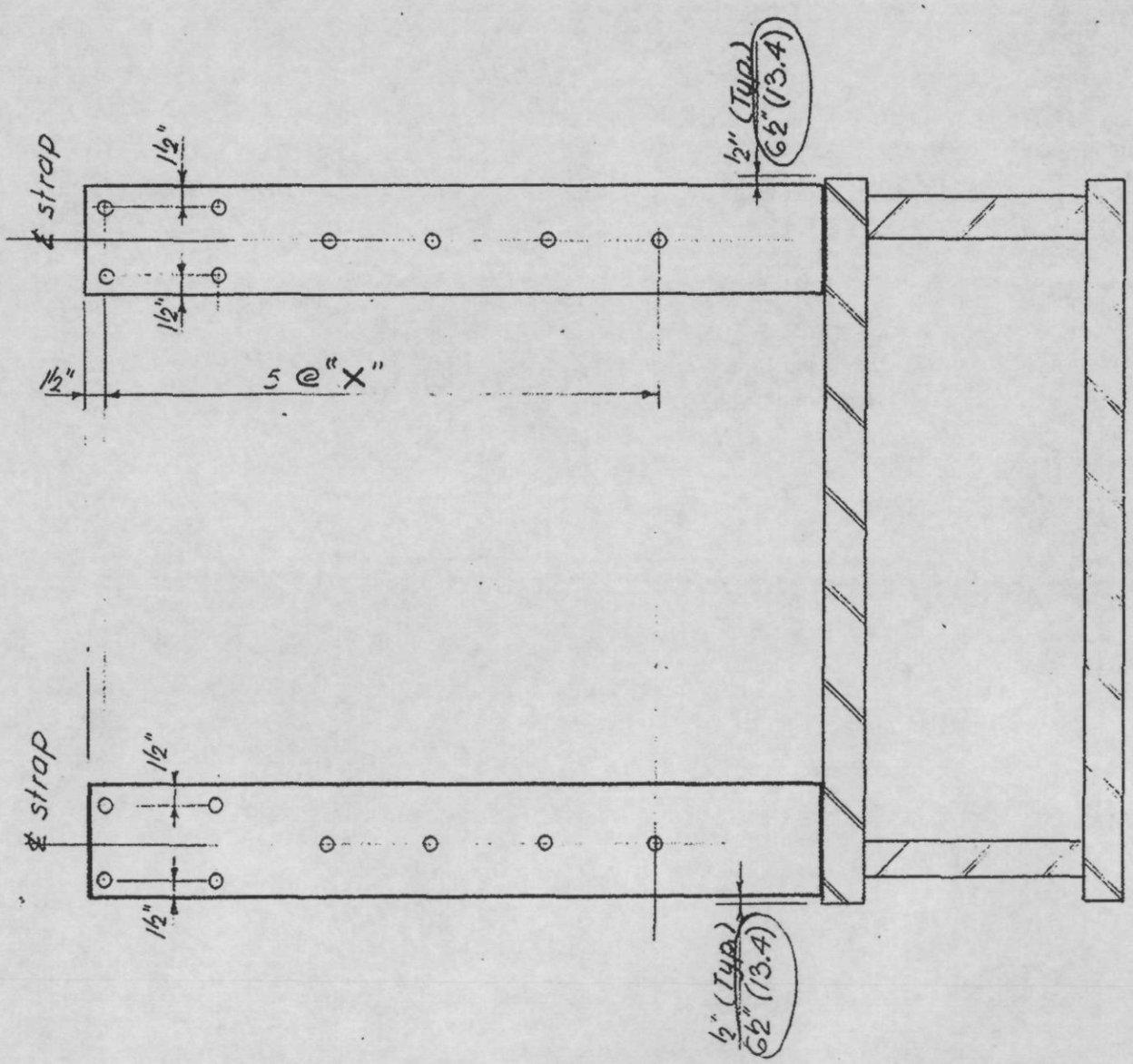

PROFESSIONAL ENGINEER
LIE E. ROBERTSON
No. 34360
OF THE STATE OF NEW YORK

DESIGNED: Hall
DRAWN: F. Smith
REVIEWED: W. Brewer

18-AB2-13

SKILLING, HELLE, CHRISTIANSEN, ROBERTSON — Structural & Civil Engineers

PROJECT: THE WORLD TRADE CENTER | TITLE: STRAP ANCHORS - CORE - DETAIL 14 | DATE: 4/30/69

REVISIONS

2-69

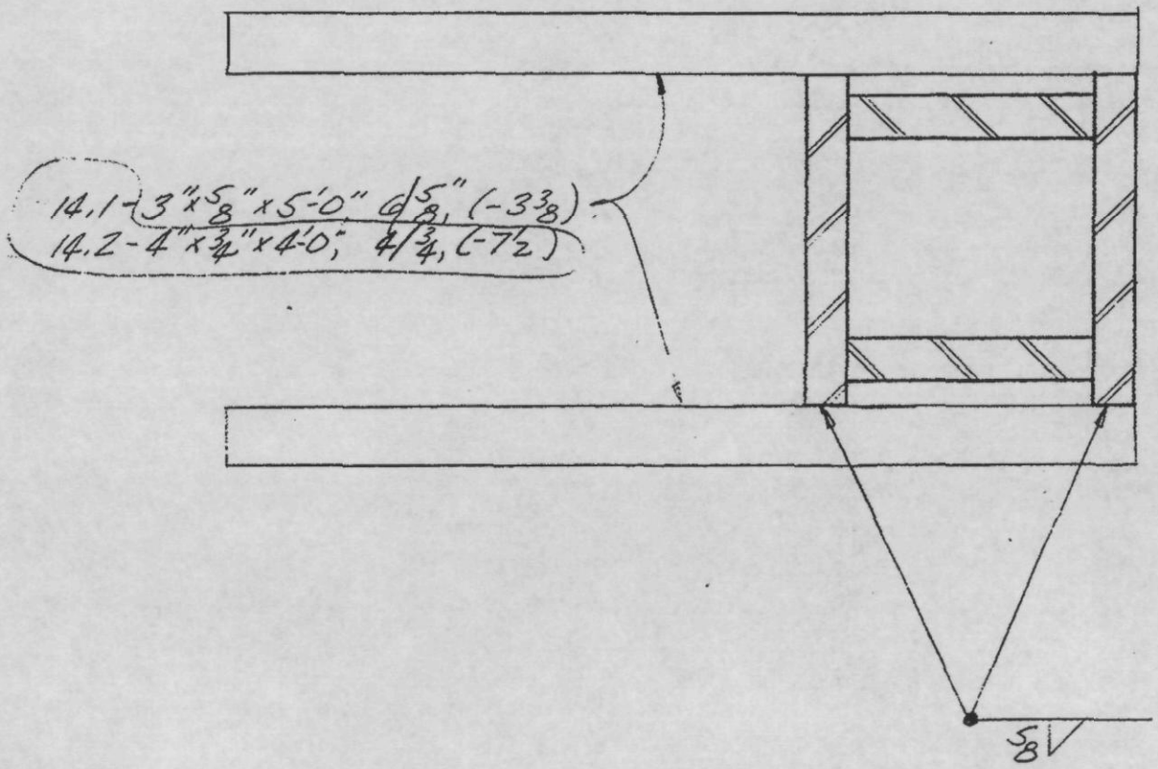

REGISTERED PROFESSIONAL ENGINEER
LESLIE E. ROBERTSON
No. 34360
CITY OF THE STATE OF NEW YORK

DRAWN J. Adams

REVIEWED W. Brewer

18-A.2-14

SKILLING, HELLE, CHRISTIANSEN, ROBERTSON — Structural & Civil Engineers

PROJECT: THE WORLD TRADE CENTER | TITLE: STRAP ANCHORS - CORE - DETAIL 15 | DATE: 4/30/67

REVISIONS

8-69

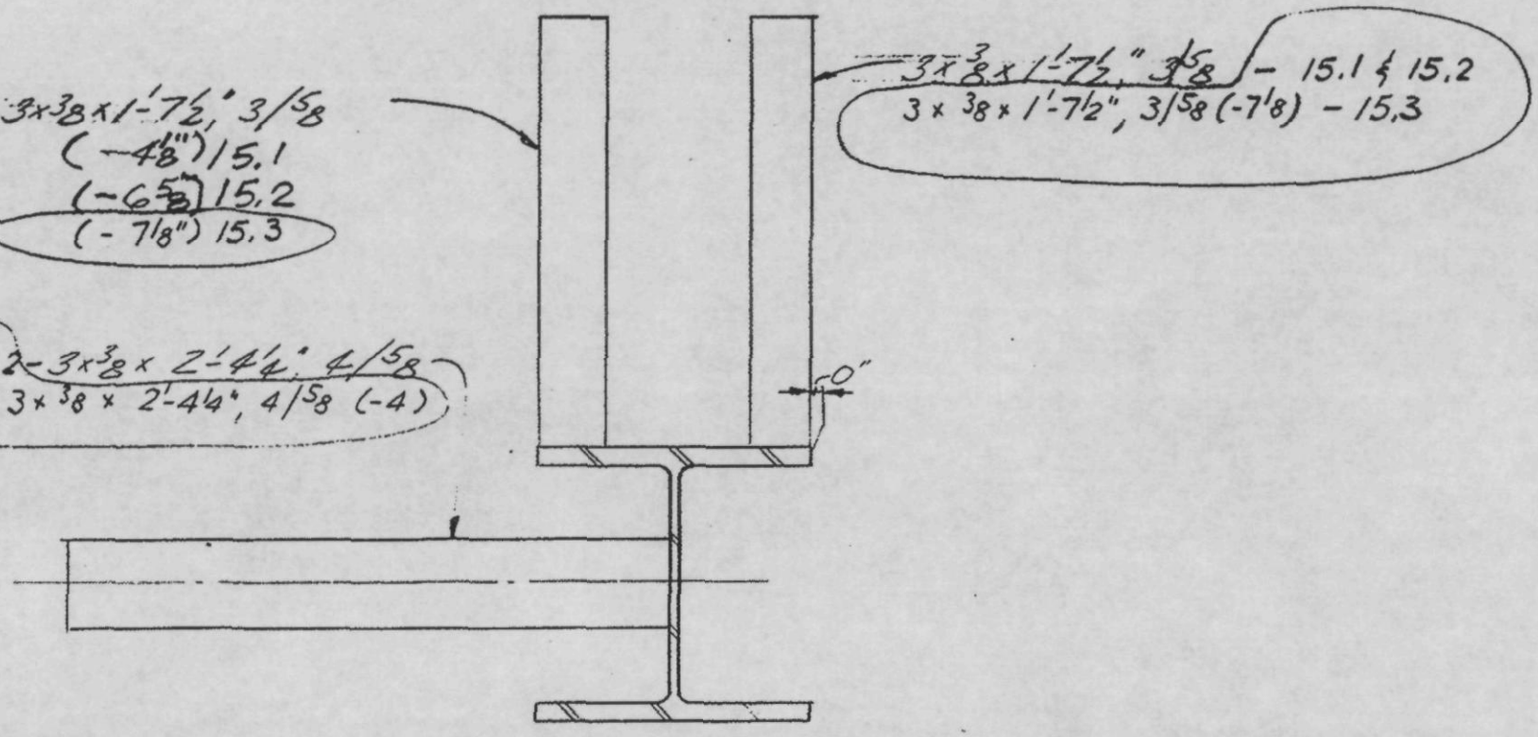

REGISTERED PROFESSIONAL ENGINEER
LESLIE E. ROBERTSON
No. 34360
CITY OF THE STATE OF NEW YORK

NEO

DRAWN J. Adams

REVIEWED W. Brewer

18-ABZ-15

SKILLING, HELLE, CHRISTIANSEN, ROBERTSON — Structural & Civil Engineers

PROJECT: THE WORLD TRADE CENTER | TITLE: STRAP ANCHOR - CORE - DETAIL 16 | DATE: 4/30/69

REVISIONS

F 3-69

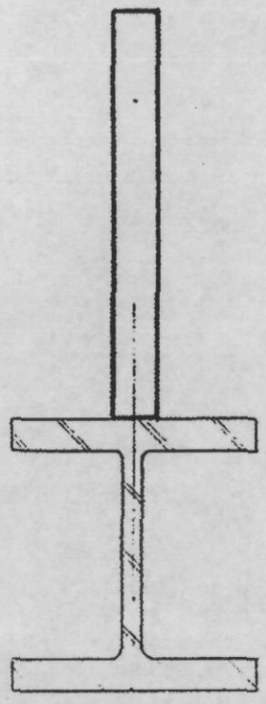

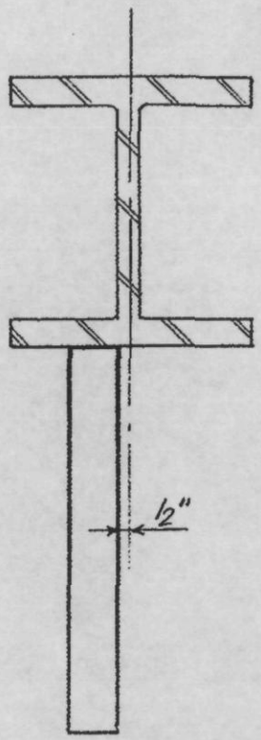

See Note 6-18-AB2-2

Detail No	Strap	Studs	Elev.
16.1	3" x 3/8" x 3'-3"	3/5/8	(-3 5/8)
16.2	3" x 3/8" x 2'-1½"	4/5/8	(-3 7/8)
16.3	3" x 3/8" x 1'-7½"	3/5/8	(-4 1/8)
16.4	3" x 3/8" x 2'-1½"	4/5/8	(-3 5/8)
16.5	3" x 3/8" x 3'-3"	3/5/8	(-6 1/8)
16.6	3" x 3/8" x 1'-7½"	3/5/8	(-7 5/8)

Detail 16.1, 16.3, 16.4, 16.5, 16.6

Detail 16.2

ED PROFESSIONAL ENGINEER
LESLIE E. ROBERTSON
No. 34360
TY OF THE STATE OF NEW YORK

NED

DRAWN
F. Smith

REVIEWED
W. Brewer

18-AB2-16

SKILLING, HELLE, CHRISTIANSEN, ROBERTSON — Structural & Civil Engineers

PROJECT: THE WORLD TRADE CENTER | TITLE: STRAP ANCHORS - CORE - DETAIL 17 | DATE: 4/30/69

REVISIONS

28-69

Detail No	Strap	Studs	Elev.
17.1	4"x½"x 4'-6"	⅝"	(-3½)
17.2	4"x½"x4'-6"	⅝"	(-3½)
17.3	4x½x3'-9½"	⅝"	(-3½)
17.4	3x⅜x1'-6"	2/⅝"	(-7⅝)

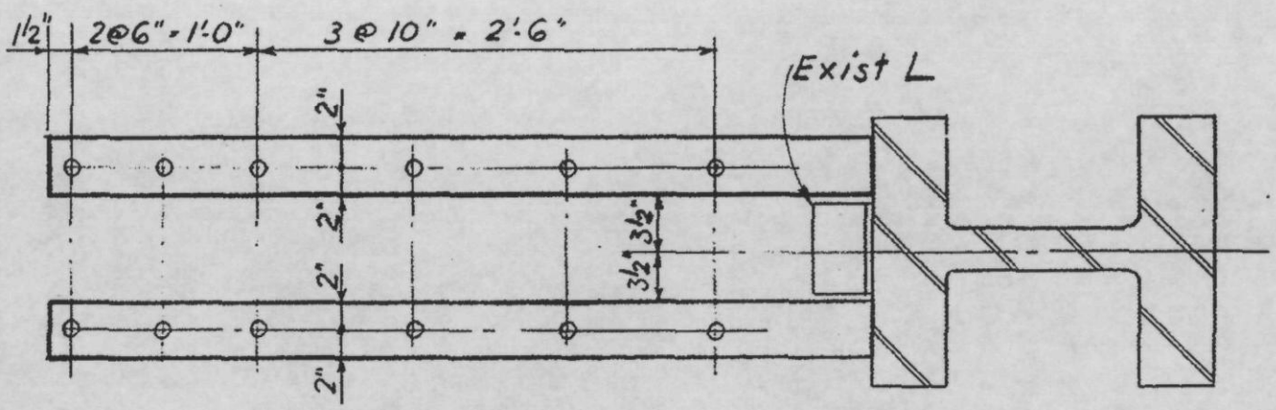

DETAIL 17.1

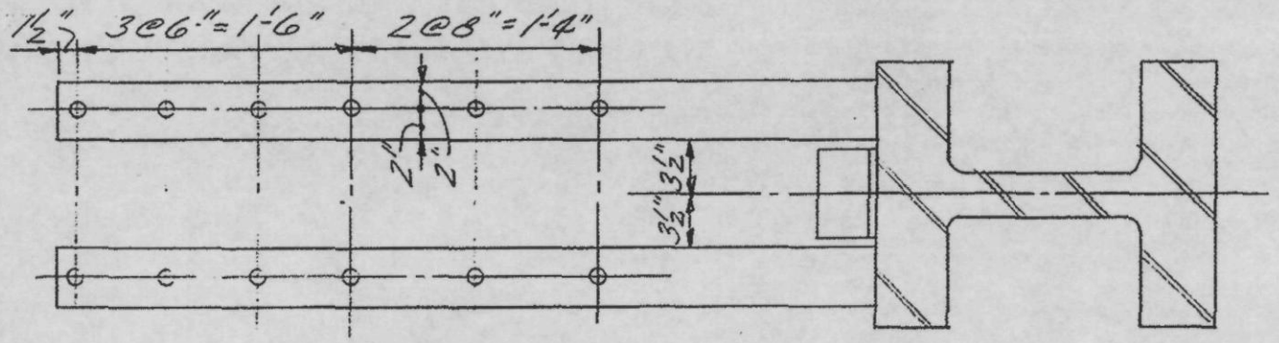

DETAIL 17.3

Studs spacing same as Det 17.1

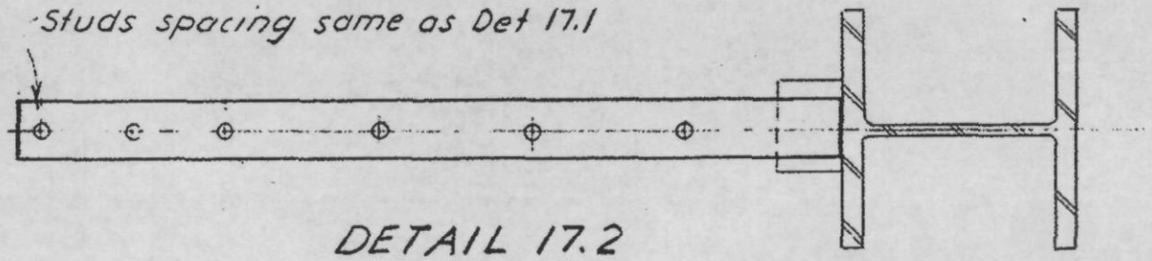

DETAIL 17.2

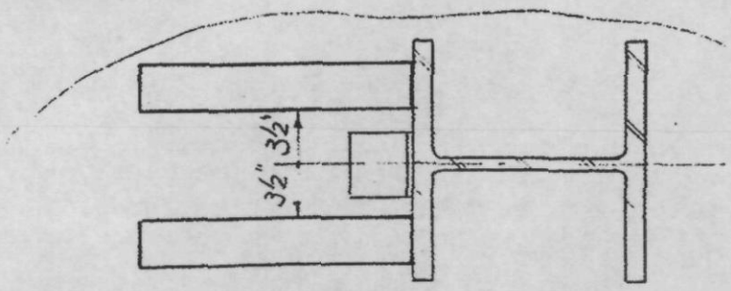

DETAIL 17.4

LICENSED PROFESSIONAL ENGINEER
LESLIE E. ROBERTSON
No. 34360
CITY OF THE STATE OF NEW YORK

DESIGNED

DRAWN
F. Smith

REVIEWED
W. Brewer

18-AB2-17

SKILLING, HELLE, CHRISTIANSEN, ROBERTSON — Structural & Civil Engineers

PROJECT THE WORLD TRADE CENTER | TITLE STRAP ANCHOR - CORE - DETAIL 18 | DATE 4/30/69

REVISIONS

28-69

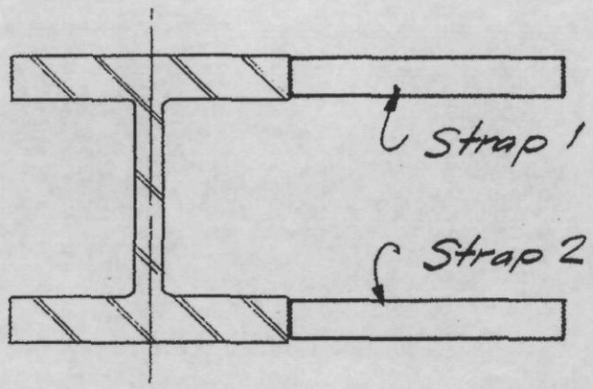

See Note 6 18-AB2-2

Detail No	Strap	Studs	Elev. Strap 1	Elev. Strap 2
18.1	3 x 3/8 x 1'-6"	3/5/8	(-7 5/8)	(-7 5/8)
18.2	3 x 3/8 x 1'-6"	3/5/8	(-7 5/8)	(-6 5/8)
18.3	3 x 3/8 x 1'-6"	2/5/8	(-7 5/8)	(-7 5/8)

LICENSED PROFESSIONAL ENGINEER
LESLIE E. ROBERTSON
No. 34360
CITY OF THE STATE OF NEW YORK

SIGNED

DRAWN F. Smith

REVIEWED W. Brewer

18-AB2-18

SKILLING, HELLE, CHRISTIANSEN, ROBERTSON — Structural & Civil Engineers

PROJECT THE WORLD TRADE CENTER | TITLE STRAP ANCHOR - CORE - DETAIL 19 | DATE 4/30/69

REVISIONS

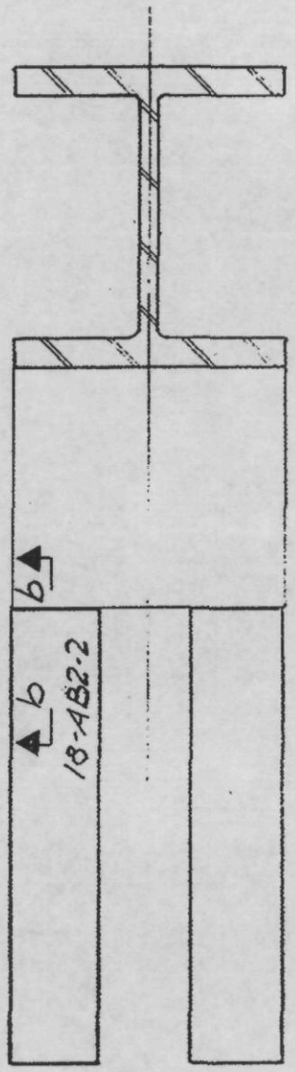

Sec Note 6 18-AB2-2			
Detail No	Strap	Studs	Elev
19.1	6 × ½ × 2'-6"	2 × 5/⅝	(-3¼)

REGISTERED PROFESSIONAL ENGINEER
LESLIE E. ROBERTSON
No. 34360
CITY OF THE STATE OF NEW YORK

NED

DRAWN
F. Smith

REVIEWED
W. Brewer

18-AB2-19

SKILLING, HELLE, CHRISTIANSEN, ROBERTSON — Structural & Civil Engineers

PROJECT THE WORLD TRADE CENTER | TITLE STRAP ANCHORS - CORE - DETAIL 20 | DATE 12-13-68

REVISIONS

4/30/69

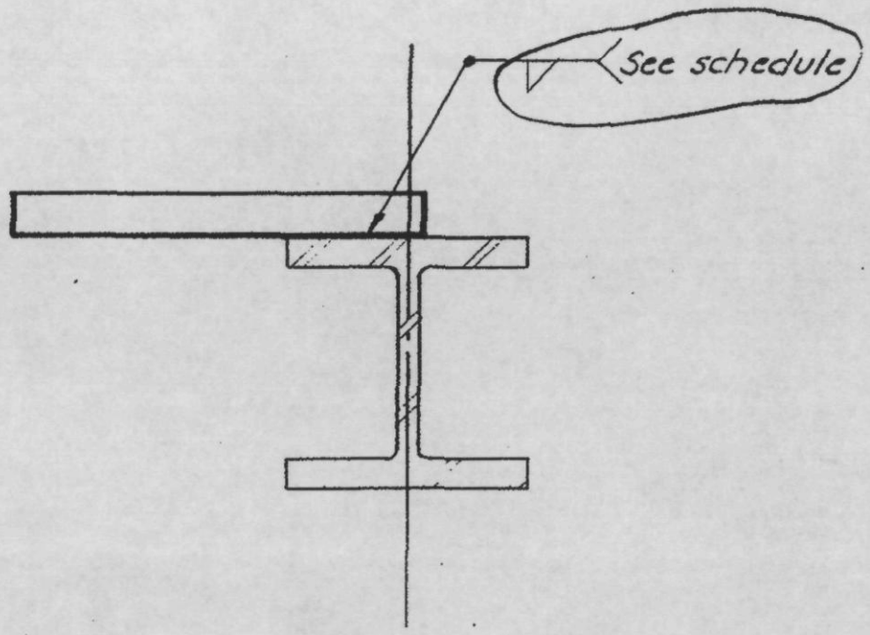

See Note G 18-AB2-2

Detail Nº	Strap	Studs	Elev	Weld
20.1	3"x⅝"x2'-10½	4/¾	—	⅝√9
20.2	3"x⅜"x2'-10"	4/⅝	(-3)	⅜√8½
20.3	3"x⅜"x2'-3"	3/⅝	(-4⅛)	5/16√7½
20.4	4"x½"x3'-0"	4/¾	(-4)	½√10½

SED PROFESSIONAL ENGINEER
LESLIE E. ROBERTSON
No. 34360
TY OF THE STATE OF NEW YORK

NED

DRAWN Wexler

REVIEWED O. Brewer

18-AB2-20

SKILLING, HELLE, CHRISTIANSEN, ROBERTSON — Structural & Civil Engineers

PROJECT THE WORLD TRADE CENTER | TITLE ANCHOR STRAPS - CORE - DETAIL 21 | DATE 10/30/68

REVISIONS

7-69

4-30-69

5-28-69

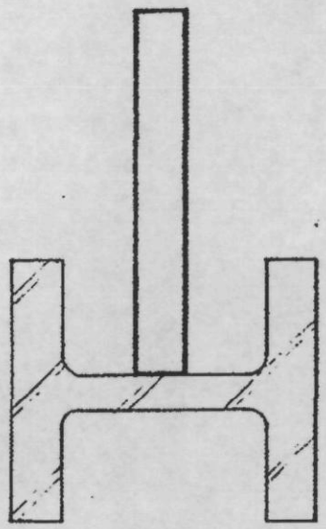

See Note 6		18-AB2-2	
Detail No.	Strap	Studs	Elev
21.1	3"x3/8"x2'-3"	3/5/8	(-4")
21.2	4"x3/4"x3'-9"	6/3/4	(-3 3/4")
21.3	3"x3/8"x2'-3"	3/5/8	(-4 1/8")
21.4	3"x3/8"x2'-0"	3/5/8	(-4 1/8")
21.5	3"x3/8"x2'-3"	3/5/8	(-6 5/8")
21.6	3"x1/2"x2'-3"	3/3/4	(-7 1/2)
21.7	3"x1/2"x2'-9"	3/3/4	(-7 1/2)

LICENSED PROFESSIONAL ENGINEER
LESLIE E. ROBERTSON
No. 34360
CITY OF THE STATE OF NEW YORK

DESIGNED Neil

DRAWN S Wexler

REVIEWED W. Brewer

18-AB2-21

SKILLING HELLE CHRISTIANSEN ROBERTSON Structural & Civil Engineers

PROJECT THE WORLD TRADE CENTER | TITLE STRAP ANCHORS - CORE - DETAIL 22 | DATE 10/30/68

REVISIONS

4-30-69
5-20-69

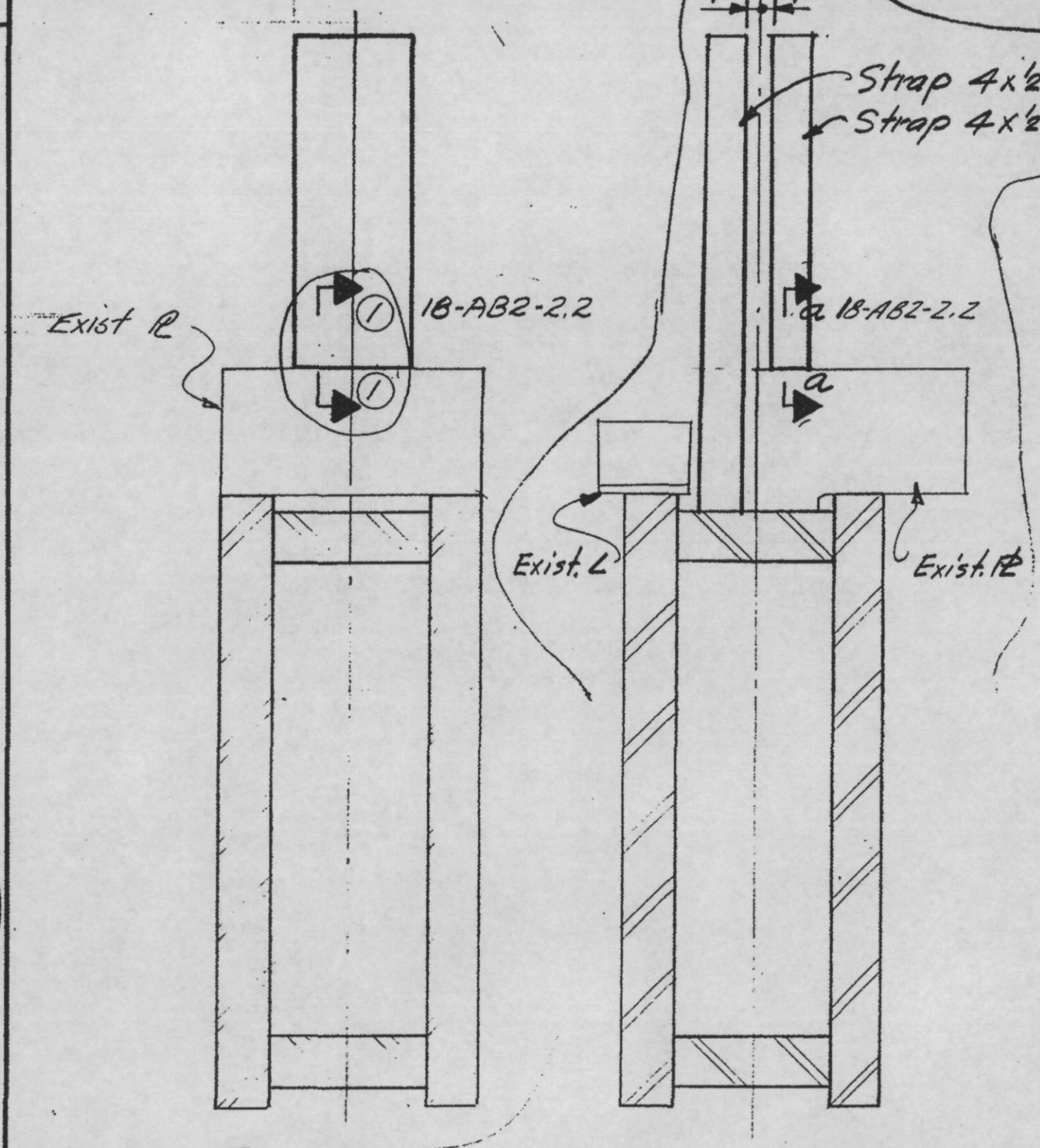

Detail 22.1 - 22.4

Detail 22.5

See Note 6 - 18-AB2-2

Detail N°	Strap	Studs	Elev.	Section ①-①
22.1	10"x½"x2'-7½	3x5/⅝	(-3)	a-a
22.2	12"x½"x2'-7½	3x5/⅝	(-3)	a-a
22.3	7"x½"x2'-7½	2x5/⅝	(-3)	a-a
22.4	4"x½"x4'-0	8/⅝	(-3¼)	b-b

LICENSED PROFESSIONAL ENGINEER
LESLIE E. ROBERTSON
No. 34950
STATE OF THE STATE OF NEW YORK

SIGNED J'Neil
DRAWN S. Wexler
REVIEWED W. Brewer

18-ABZ-22

SKILLING, HELLE, CHRISTIANSEN, ROBERTSON Structural & Civil Engineers

PROJECT THE WORLD TRADE CENTER | TITLE STRAP ANCHORS-CORE - DETAIL 23 | DATE 12-13-68

REVISIONS

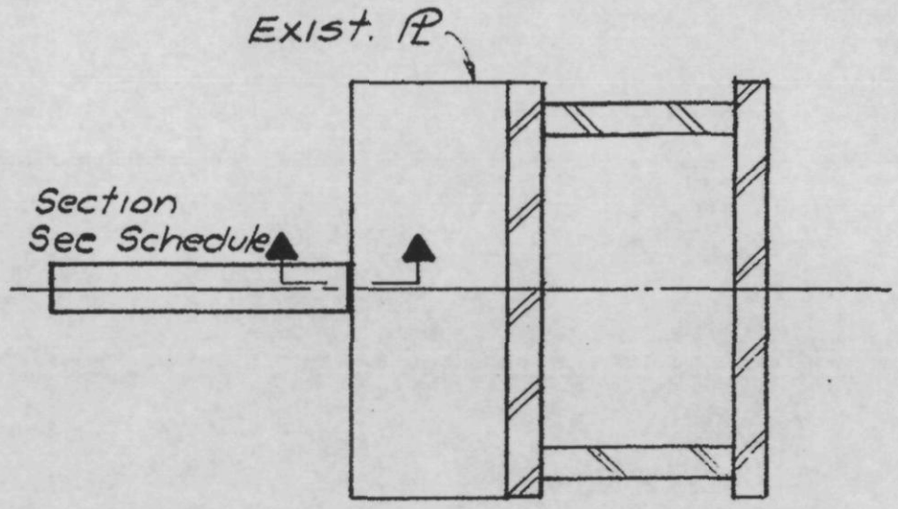

TYPE A

See Note 6 - 18-AB2-2						
Detail No	Strap	Studs	Elev	Type	Dimen. "A"	Section 18-AB2-2
23.1	4"x1/2"x2'-7 1/2"	5/3/4	(-5 3/4)	B	9 1/2"	b-b
23.2	4x1/2x3-1 1/2	6/5/8	(-3 1/4)	B	9 1/2	b-b

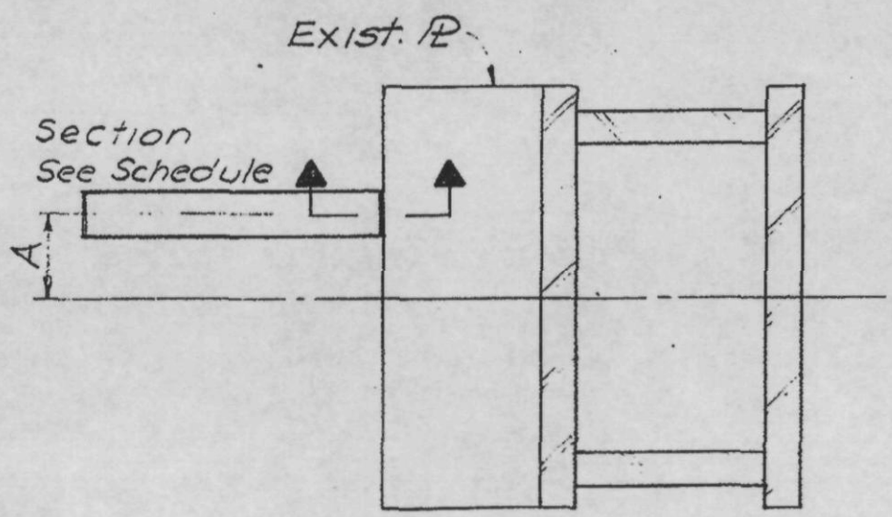

TYPE B

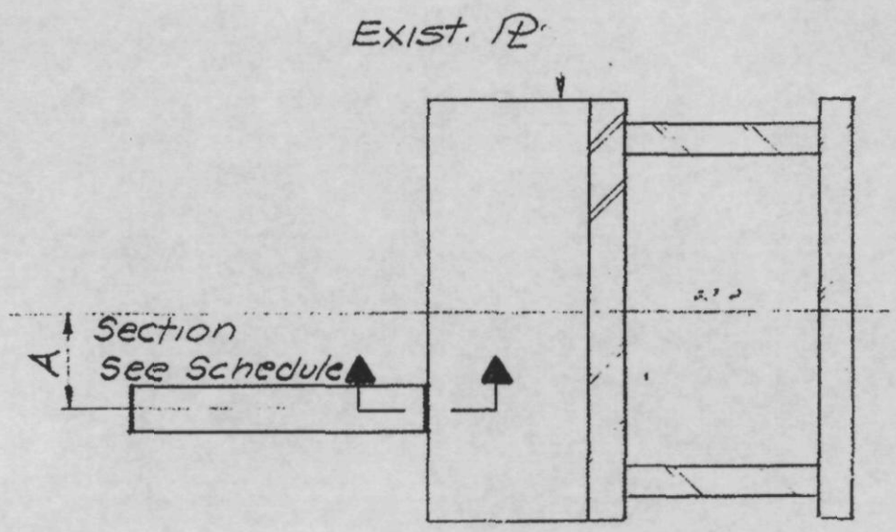

TYPE C

NED
Neill
DRAWN
S. Wexler
REVIEWED

18-AB2-23

SKILLING, HELLE, CHRISTIANSEN, ROBERTSON — Structural & Civil Engineers

PROJECT THE WORLD TRADE CENTER | TITLE STRAP ANCHORS - CORE - DETAIL 24 | DATE 10/30/68

REVISIONS

12-13-68
2-7-69
4-30-69
5-20-69
5-28-69
10-1-69

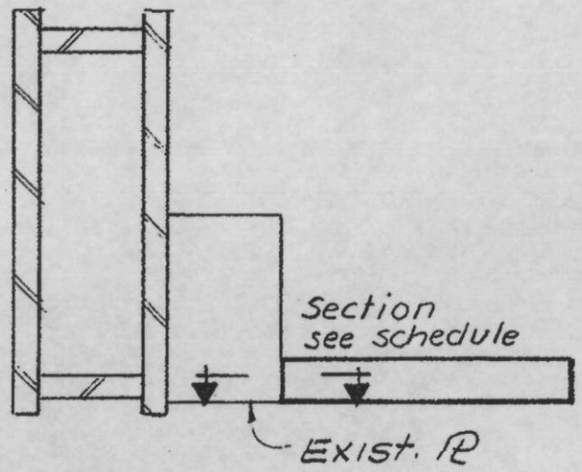

24.1 - 24.11, 24.13, 24.14

24.16, 24.17

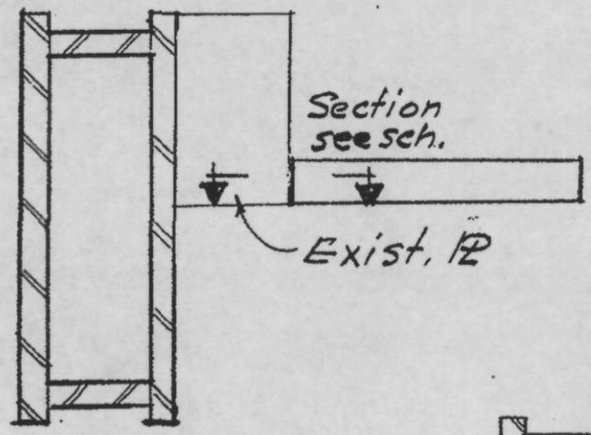

24.12

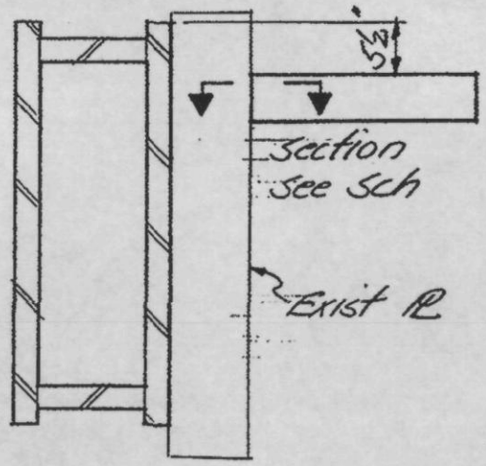

24.15

See Note 6 - 18-AB2-2

Detail Nº	Strap	Studs	Elev	Section (18-AB2-2)
24.1	4"x3/8"x2'-1 1/2"	4|5/8	(-3 1/8)	a-a
24.2	3"x3/8"x1'-7 1/2"	3|3/4	(-5 7/8)	b-b
24.3	4"x1/2"x2'-11"	6|5/8	(-5 3/4)	b-b
24.4	4"x1/2"x2'-11"	6|5/8	(-5 1/2)	a-a
24.5	3"x3/8"x2-1 1/2"	4|5/8	(-3 3/8)	b-b
24.6	5"x3/8"x1-6"	3|3/4	(-6 5/8)	a-a
24.7	3"x3/8"x1-6"	3|5/8	(-6 5/8)	a-a
24.8	3"x3/8"x1'-6"	3|5/8	(-3 3/8)	b-b
24.9	3"x3/8"x1'-6"	3|5/8	(-3 1/8)	a-a
24.10	3"x3/8"x2'-0"	4|5/8	(-3 3/8)	b-b
24.11	3"x3/8"x2'-0"	4|5/8	(-5 7/8)	b-b
24.12	10"x5/8"x5'-6"	2x10 5/8	(-3 1/2)	b-b
24.13	5"x3/4"x5'-1 1/2"	10|5/8	(-3)	b-b
24.14	5"x3/4"x5'-1 1/2"	10|5/8	(-9 1/2)	b-b
24.15	4"x1/2"x2'-11"	7|5/8 *	(-5 3/4)	b-b
24.16	3"x3/8"x1'-6"	3|5/8	(-6 3/4)	a-a
24.17	3"x3/8"x1'-6"	3|5/8	(-5 5/8)	a-a

* @ 5" c.c.

LICENSED PROFESSIONAL ENGINEER
LESLIE E. ROBERTSON
No. 34360
UNIVERSITY OF THE STATE OF NEW YORK

49

DESIGNED L. O'Neill
DRAWN S. Wexler
REVIEWED W. Brewer

18-AB2-24

SKILLING, HELLE, CHRISTIANSEN, ROBERTSON — Structural & Civil Engineers

PROJECT THE WORLD TRADE CENTER | TITLE STRAP ANCHORS - CORE - DETAIL 25 | DATE 10/30/68

REVISIONS

2-7-69

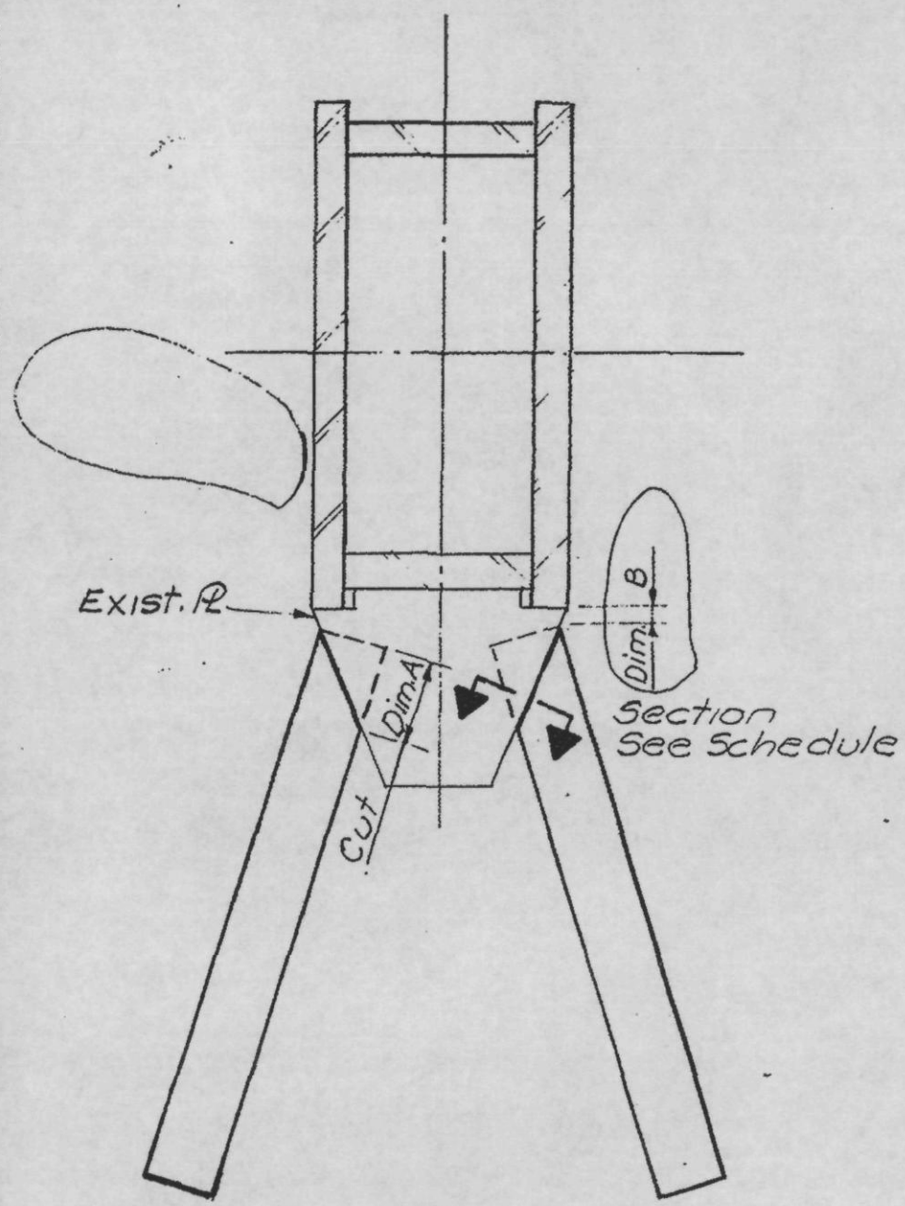

See Note 6 · 18-AB2-2

Detail Nº	Strap	Studs	Elev	Dim A	Section (18-AB2-2)	Dim. B
25.1	5"x1/2"x3'-7 1/2"	7/5B	(-3 1/4)	6"	b-b	1"
25.2	5"x1/2"x3'-7 1/2"	7/5B	(-3)	6"	a-a	1"
25.3	4"x3/4"x4'-7 1/2"	9/5B	(-3)	5 1/2"	b-b	1"
25.4	4"x1/2"x3'-1 1/2"	6/5B	(-3)	2"	a-a	1"
25.5	5 1/2"x5/8"x3'-3"	2x6/5B	(-3 1/8)	6 3/8"	b-b	3/4"

LICENSED PROFESSIONAL ENGINEER — LESLIE E. ROBERTSON — No. 34390 — UNIVERSITY OF THE STATE OF NEW YORK

DESIGNED T. O'Neill

DRAWN S. Wexler

REVIEWED W. Brewer

18-AB2-25

SKILLING, HELLE, CHRISTIANSEN, ROBERTSON — Structural & Civil Engineers

PROJECT THE WORLD TRADE CENTER | TITLE STRAP ANCHORS - CORE - DETAIL 26 | DATE 12-13-68

REVISIONS

4-30-69

5-20-69

5-28-69

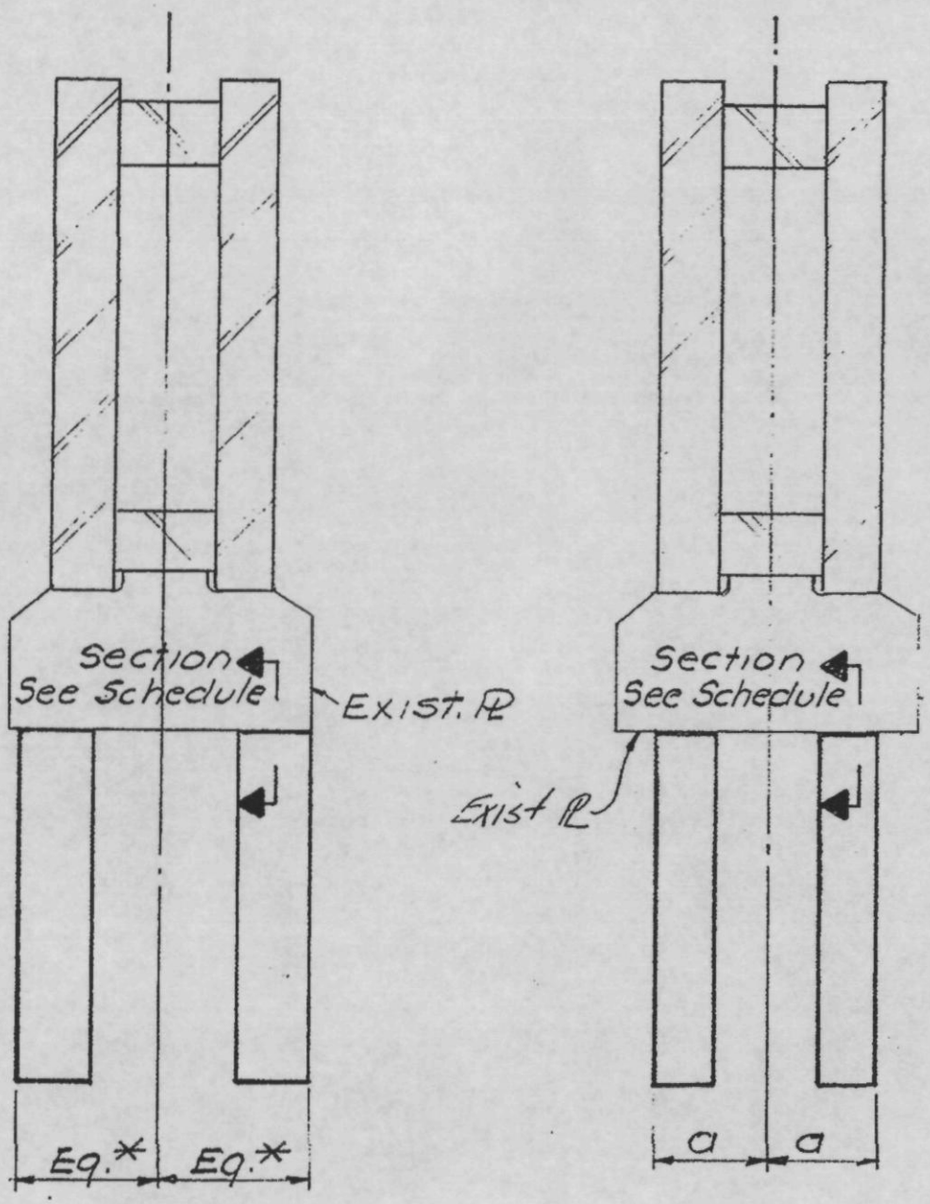

TYPE A

TYPE B

* Dimension to be maximum possible, consistent with symmetry about column ℄.

See note 6 — 18-AB2-2

Detail No.	Strap	Studs	Elev	Type	Dimen. "a"	Sect. 18-AB2-2
26.1	6"x½"x2'-7½"	5/7/8	(-5½)	A	—	a-a
26.2	6"x½"x2'-1½"	4/7/8	(-5½)	A	—	a-a
26.3	6"x½"x2'-1½"	2x4/5/8	(-3)	A	—	a-a
26.4	5"x½"x3'-0"	6/5/8	(-5)	B	12"	a-a
26.5	5"x½"x3'-0"	6/5/8	(-5)	B	10"	a-a
26.6	6"x5/8"x2'-0"	2x4/3/4	(-6 5/8)	B	9"	b-b
26.7	6"x½"x2'-6"	2x5/5/8	(-3)	B	8½"	a-a
26.8	6"x½"x2'-6"	2x5/5/8	(-3⅜)	B	8½"	a-a
26.9	6"x½"x2'-6"	2x5/5/8	(-5½)	B	8½"	a-a
26.10	5"x½"x3'-7½"	7/5/8	(-3¼)	A	—	b-b
26.11	6"x¾"x3'-0"	2x6/5/8	(-3)	A	—	b-b
26.12	4"x½"x2'-0"	4/5/8	(-3¼)	B	8½"	b-b
26.13	6"x5/8"x1'-10½"	2x4/3/4	(-6 7/8)	A	—	b-b
26.14	8"x½"x2'-0"	2x4/3/4	(-7)	A	—	b-b
26.15	6"x½"x1'-10½"	2x3/3/4	(-7)	A	—	b-b
26.16	6"x½"x1'-10½"	2x3/3/4	(-6¾)	B	10"	b-b

LICENSED PROFESSIONAL ENGINEER — LESLIE E. ROBERTSON — No. 34360 — UNIVERSITY OF THE STATE OF NEW YORK

DESIGNED O'Neill

DRAWN S. Wexler

REVIEWED W. Brewer

18-AB-2-26

SKILLING, HELLE, CHRISTIANSEN, ROBERTSON — Structural & Civil Engineers

PROJECT THE WORLD TRADE CENTER | TITLE ANCHOR STRAPS - CORE - DETAIL 27 | DATE 12-13-68

REVISIONS

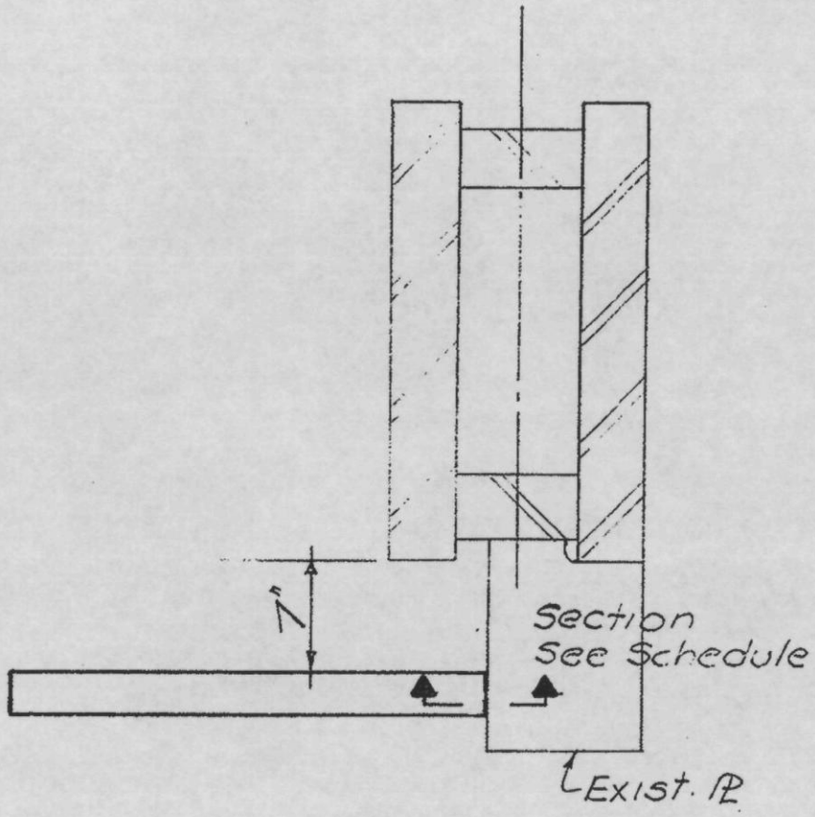

See Note 6 . 18-AB2-2				
Detail No	Strap	Studs	Elev.	Section (18-AB2-2)
27.1	3"x1/2"x2'-1 1/2	4/3/4	(-5 1/2)	a-a
27.2	3x1/2x2-7 1/2	5/5/8	(-3)	a-a
27.3	3x3/4x2-1 1/2	4/3/4	(-6 1/2)	b-b

LICENSED PROFESSIONAL ENGINEER
LESLIE E. ROBERTSON
No. 34360
UNIVERSITY OF THE STATE OF NEW YORK

DESIGNED L. O'Neil
DRAWN S. Wexler
REVIEWED

18-AB2-27

SKILLING, HELLE, CHRISTIANSEN, ROBERTSON — Structural & Civil Engineers

PROJECT THE WORLD TRADE CENTER | TITLE STRAP ANCHORS - CORE - DETAIL 56 | DATE 12-13-68

REVISIONS

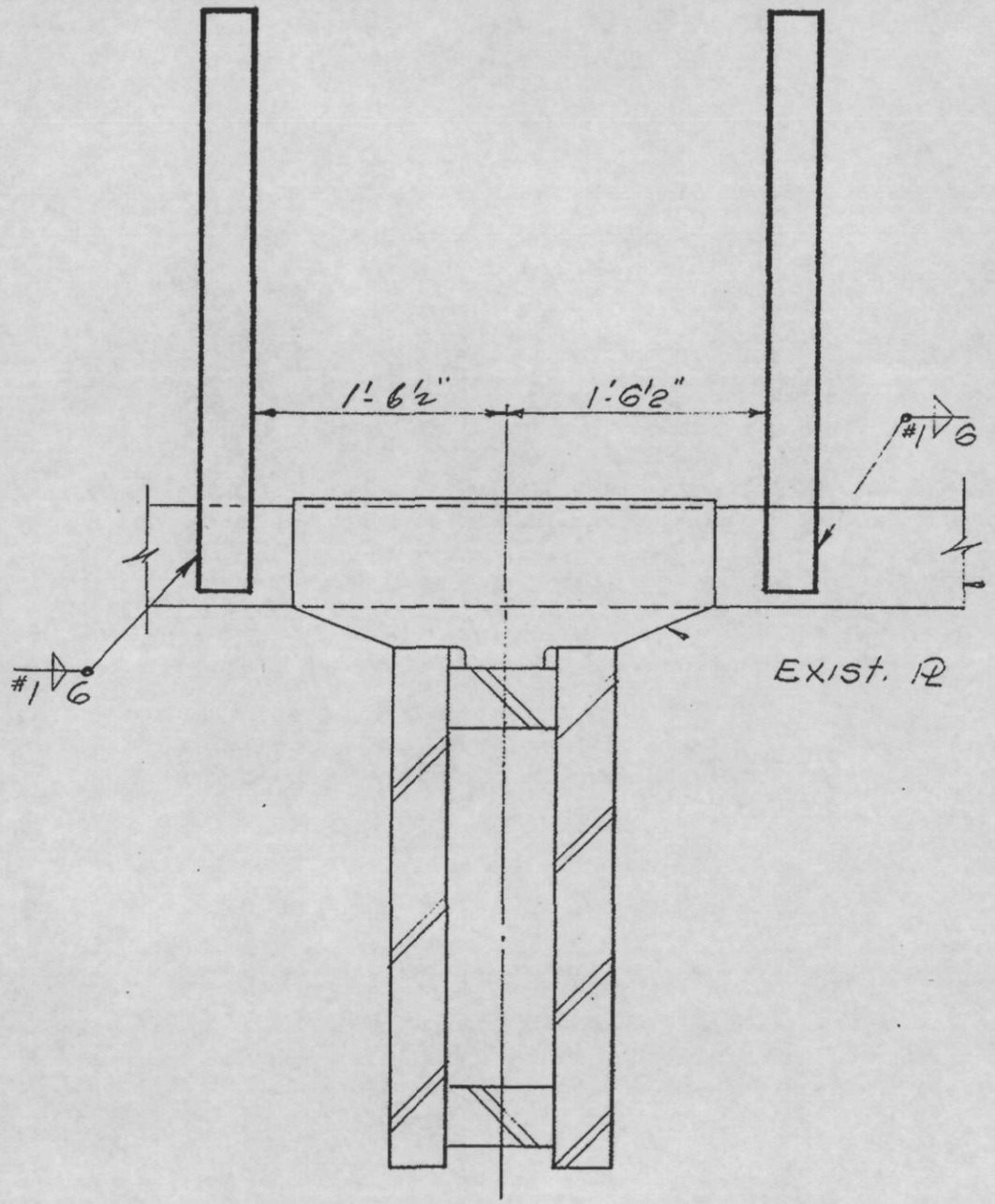

See note 6 18-AB2-2

Detail Nº	Strap	Studs	Elev	Weld #1
28.1	4"x½x2'-7½	4|5-8	—	¼
28.2	4x½x2-6	4|3-4	—	5/16

LICENSED PROFESSIONAL ENGINEER
LESLIE E. ROBERTSON
No. 34360
UNIVERSITY OF THE STATE OF NEW YORK

DESIGNED L. O'Neill
DRAWN S. Wexler
REVIEWED

18-AB2-28

SKILLING, HELLE, CHRISTIANSEN, ROBERTSON — Structural & Civil Engineers

PROJECT THE WORLD TRADE CENTER | TITLE ANCHOR STRAPS - CORE - DETAIL 29 | DATE 12-13-68

REVISIONS

4-30-69
7-14-69

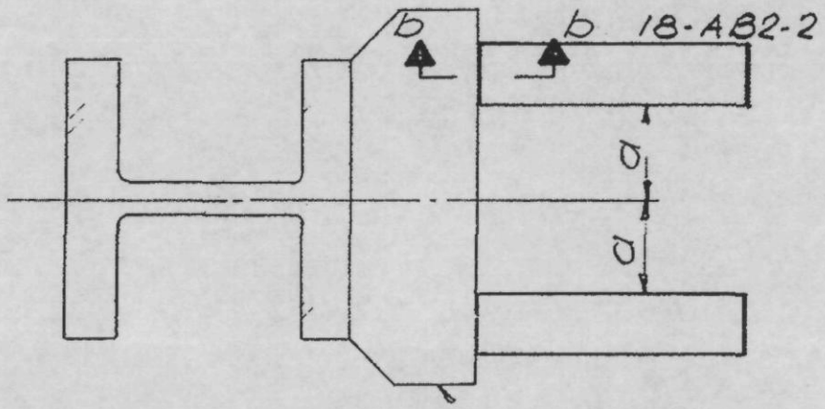

EXIST. ℄

See Note G 18-AB2-2				
Detail Nº	Strap	Studs	Elev	Dimen a
29.1	4"x3/8"x1'-6"	3/5B	(-6 7/8)	5"
29.2	3"x5/16"x1'-6"	3/5B	(-6 15/16)	5"
29.3	6"x1/2"x2'-0"	4/7B	(-6 3/4)	4 1/2"
29.4	6"x1/2"x2'-6"	2x5/5/8	(-3/4)	7"
29.5	6"x1/2"x2'-6"	2x5/5/8	(-3/4)	3 1/2"
29.6	6"x1/2"x2'-0"	2x4/5/8	(-3/4)	5"
29.7	6"x1/2"x2'-0"	2x4/5/8	(-3)	5"
29.8	3"x3/8"x1'-6"	3/5/8	(-3 3/8)	2"
29.9	6"x1/2"x2'-6"	2x5/5/8	(-3/4)	6"
29.10	6"x1/2"x2'-6"	2x5/5/8	(-3/4)	3"
29.11	6"x1/2"x2'-6"	2x5/5/8	(-5 3/4)	3"

LICENSED PROFESSIONAL ENGINEER
LESLIE E. ROBERTSON
No. 34360
UNIVERSITY OF THE STATE OF NEW YORK

DESIGNED L. O'Neill
DRAWN S. Wexler
REVIEWED W. Brewer

18-AB2-29

SKILLING, HELLE, CHRISTIANSEN, ROBERTSON — Structural & Civil Engineers

PROJECT THE WORLD TRADE CENTER | TITLE ANCHOR STRAPS - CORE - DETAIL 30 | DATE 12-13-68

REVISIONS

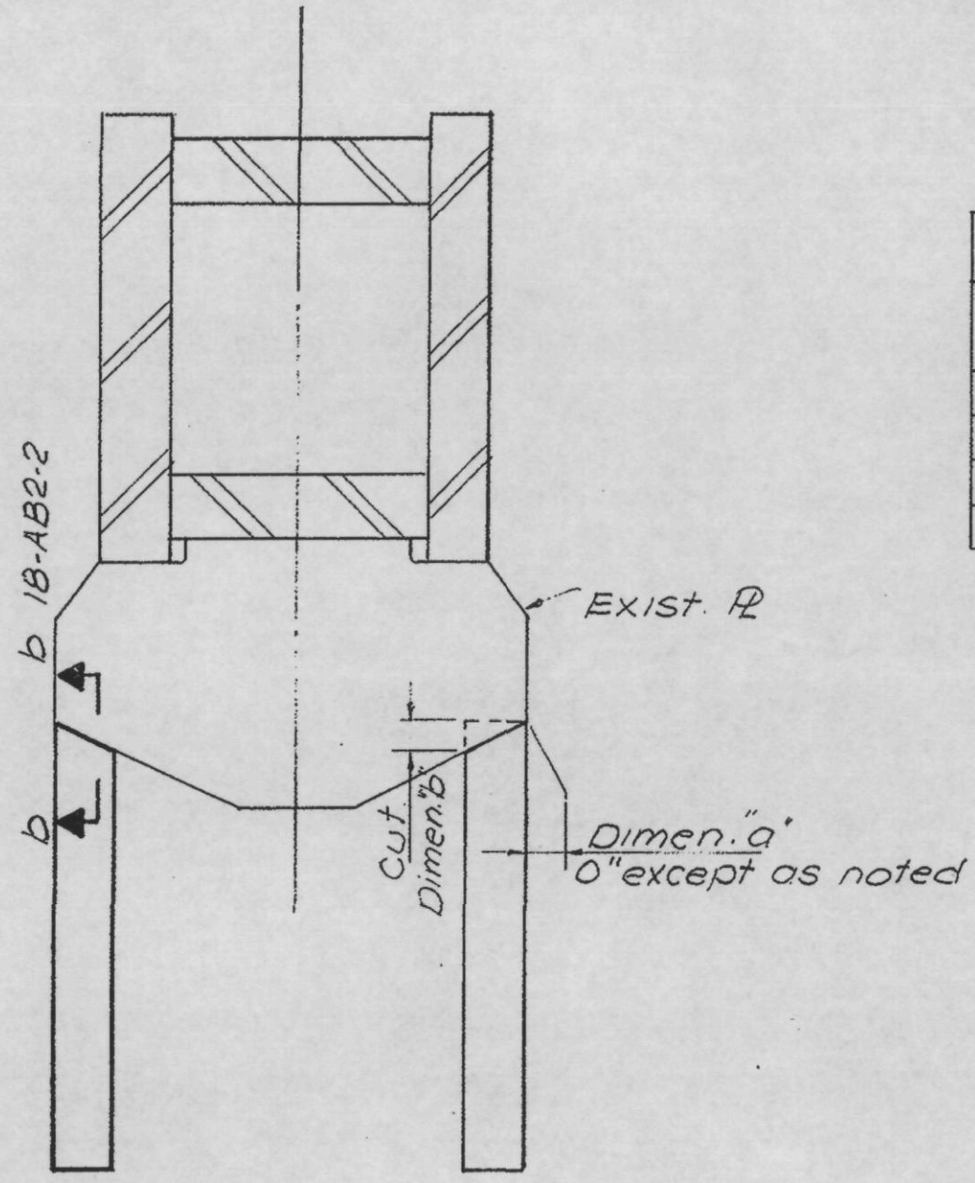

See Note 6				18-AB2-2	
Detail Nº	Strap	Studs	Elev	Dimen "a"	Dimen "b"
30.1	4"x3/4"x2'-6	5/3/4	(-6'2)	—	2"
30.2	6x3/4x2-0	2x4/3/4	(-6'2)	5 1/2"	4 5/8"

LICENSED PROFESSIONAL ENGINEER
LESLIE E. ROBERTSON
No. 34360
UNIVERSITY OF THE STATE OF NEW YORK

DESIGNED L. O'Neill
DRAWN S. Wexler
REVIEWED

18-AB2-30

SKILLING, HELLE, CHRISTIANSEN, ROBERTSON — Structural & Civil Engineers

PROJECT THE WORLD TRADE CENTER | TITLE STRAP ANCHORS - CORE - DETAIL 31 | DATE 12-13-68

REVISIONS

5-28-69

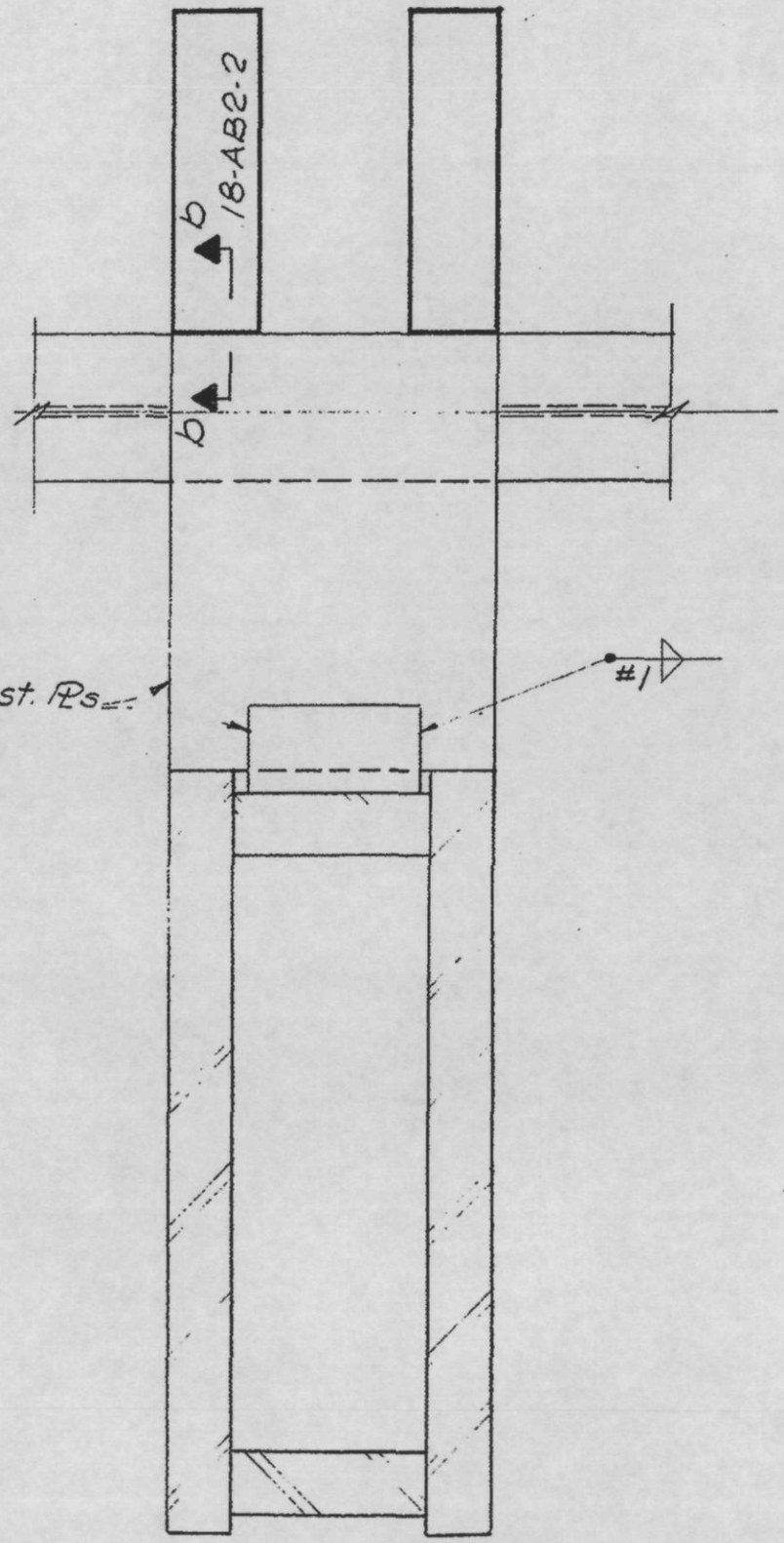

See Note G		18-AB2-2		
Detail Nº	Strap	Studs	Elev	Weld #1
31.1	6" x 5/8" x 1'-10½"	2x4/3/4	(-6 7/8)	5/8
31.2	8" x 1/2" x 2'-0"	2x4/3/4	(-7)	1/2
31.3	3" x 3/8" x 1'-6½"	3/5/8	(-6 7/8)	–

LICENSED PROFESSIONAL ENGINEER
LESLIE E. ROBERTSON
No. 34360
UNIVERSITY OF THE STATE OF NEW YORK

DESIGNED
L. O'Neill

DRAWN
S. Wexler

REVIEWED

18-AB2-31

SKILLING, HELLE, CHRISTIANSEN, ROBERTSON — Structural & Civil Engineers

PROJECT THE WORLD TRADE CENTER | TITLE ANCHOR STRAPS - CORE - DETAIL 32 | DATE 12-13-68

REVISIONS
4-30-69
5-28-69

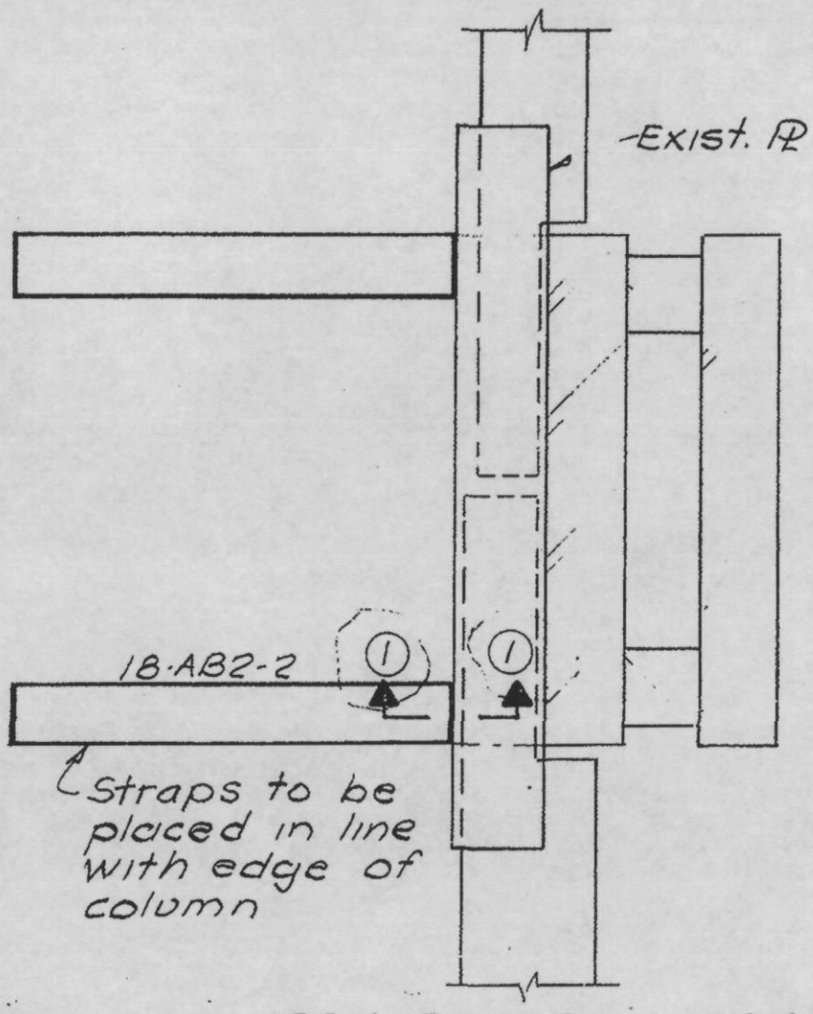

Straps to be placed in line with edge of column

32.1, 32.2, 32.3, 32.9, 32.13-32.19

See Note 6, 18-AB2-2

Detail No	Strap	Studs	Elev	Section 1 1	Cut A
32.1	4×½×2'-6"	5/5/8	(-5)	a-a	—
32.2	5×¾×2'-6"	5/7/8	(-6½)	a-a	—
32.3	6×½×4'-6"	9/5/8	(-5 3/8)	b-b	—
32.4	6×⅜×3'-0"	10/5/8 *	(-3)	b-b	—
32.5	4×½×3'-0"	5/5/8	(-5¾)	b-b	⅞
32.6	4×½×3'-0"	5/5/8	(-5¾)	b-b	⅞
32.7	6×⅜×4'-6"	9/5/8	(-3)	b-b	—
32.8	4×½×3'-6"	7/5/8	(-3¼)	c-c	1 3/8
32.9	10×⅜×4'-6"	8/¾	(-5⅞)	b-b	—
32.10	8×½×3'-0"	10/5/8 *	(-3¼)	b-b	—
32.11	8×½×3'-0"	10/5/8 *	(-4¾)	b-b	—
32.12	4×½×3'-6"	6/5/8	(-3¼)	b-b	¾
32.13	6×½×2'-6"	2×4/5/8	(-5¼)	b-b	—
32.14	4×½×3'-6"	6/5/8	(-5¼)	b-b	—
32.15	6×½×2'-6"	4/7/8	(-6¾)	a-a	—
32.16	4×½×2'-6"	4/¾	(-6⅞)	a-a	—
32.17	4×½×2'-6"	4/¾	(-6¾)	a-a	—
32.18	3×½×2'-6"	3/¾	(-7)	a-a	—
32.19	3×⅜×2'-6"	3/5/8	(-6⅞)	a-a	—

* See Plan for spacing.

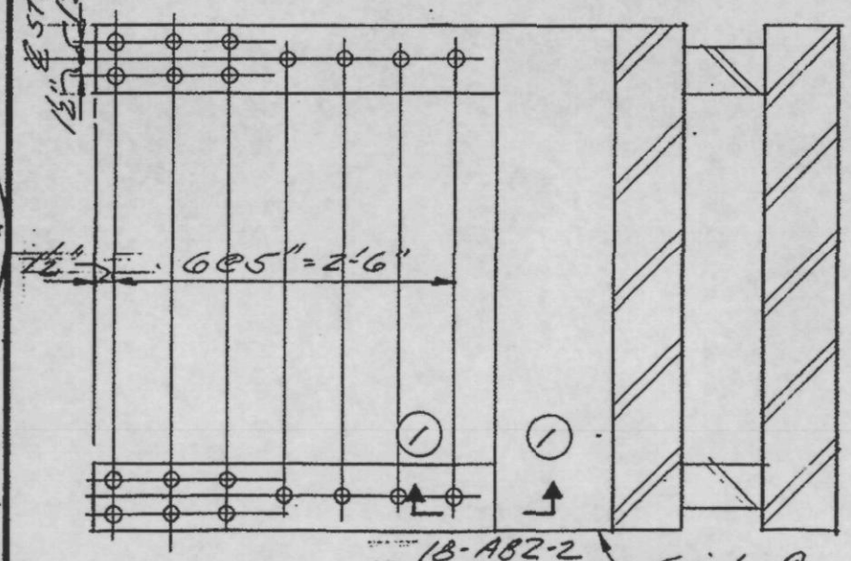

32.4, 32.10, 32.11

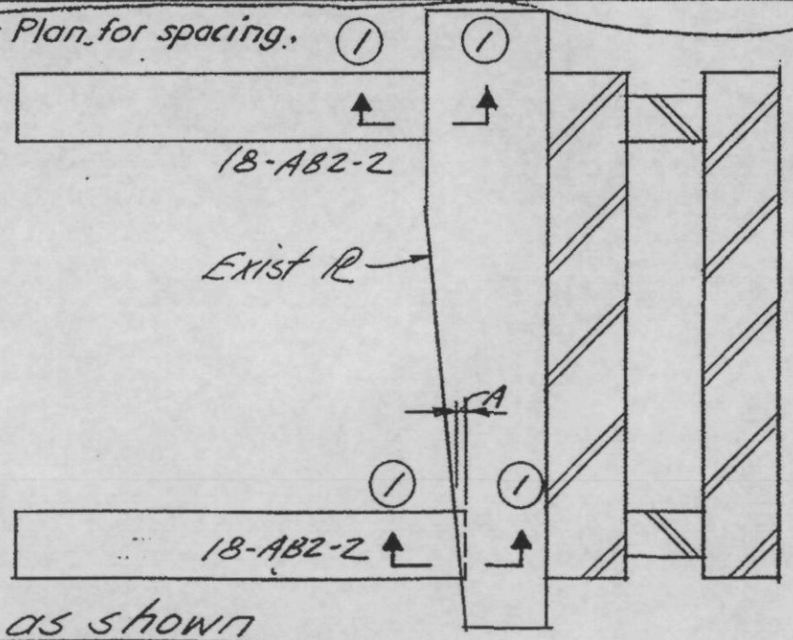

32.5 as shown
32.6, 32.7 & 32.12 opp hand

LICENSED PROFESSIONAL ENGINEER
LESLIE E. ROBERTSON
No. 34360
UNIVERSITY OF THE STATE OF NEW YORK

52
DESIGNED L. O'Neill
DRAWN S. Wexler
REVIEWED W. Brewer

18-AB2-32

SKILLING, HELLE, CHRISTIANSEN, ROBERTSON — Structural & Civil Engineers

PROJECT THE WORLD TRADE CENTER | TITLE STRAP ANCHORS- CORE- DETAIL 33 | DATE 12-13-68

REVISIONS

2-7-69

4-30-69

5-28-69

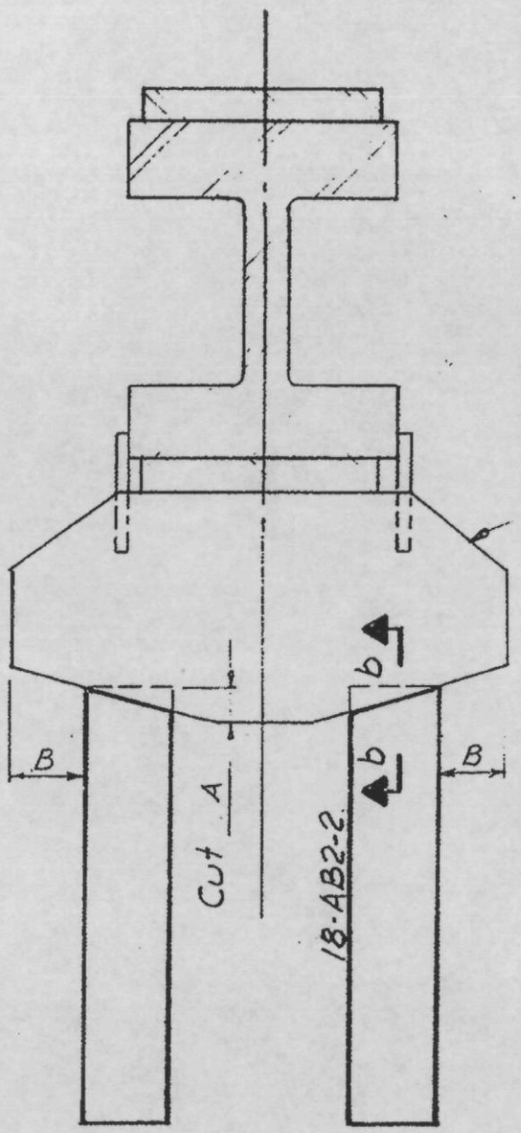

See Note 6 18-AB2-2					
Detail No.	Strap	Studs	Elev.	Dim. A	Dim B
33.1	6"x 1/2" x 2'-6"	5/7/8	(-6 3/4)	1 3/8"	4 1/2"
33.2	3"x 3/8" x 1'-6"	3/5/8	(-3 3/8)	1 1/2"	4"
33.3	6"x 1/2" x 2'-0"	2x 4/5/8	(-3 1/4)	1 1/2"	6"
33.4	6"x 1/2" x 2'-6"	2x 5/5/8	(-3 1/4)	1 1/2"	4 1/2"
33.5	3"x 3/8" x 1'-6"	3/5/8	(-3 3/8)	1 1/2"	5"
33.6	3"x 3/8" x 1'-6"	3/5/8	(-6 7/8)	1 1/2"	4"

LICENSED PROFESSIONAL ENGINEER
LESLIE E. ROBERTSON
No. 34360
UNIVERSITY OF THE STATE OF NEW YORK

DESIGNED L. O'Neill

DRAWN S. Wexler

REVIEWED W. Brewer

18-AB2-33

SKILLING, HELLE, CHRISTIANSEN, ROBERTSON — Structural & Civil Engineers

PROJECT THE WORLD TRADE CENTER | TITLE STRAP ANCHORS - CORE - DETAIL 34 | DATE 2-7-69

REVISIONS

4-30-69

See Note 6 18-AB2-2

Detail No.	Strap	Studs	Elev.	Dim. A
34.1	6 x 1/2 x 2'-0"	2 x 4/5/8	(-3/4)	7 1/2"
34.2	6 x 1/2 x 2'-0"	2 x 4/5/8	(-3/4)	6 3/4"

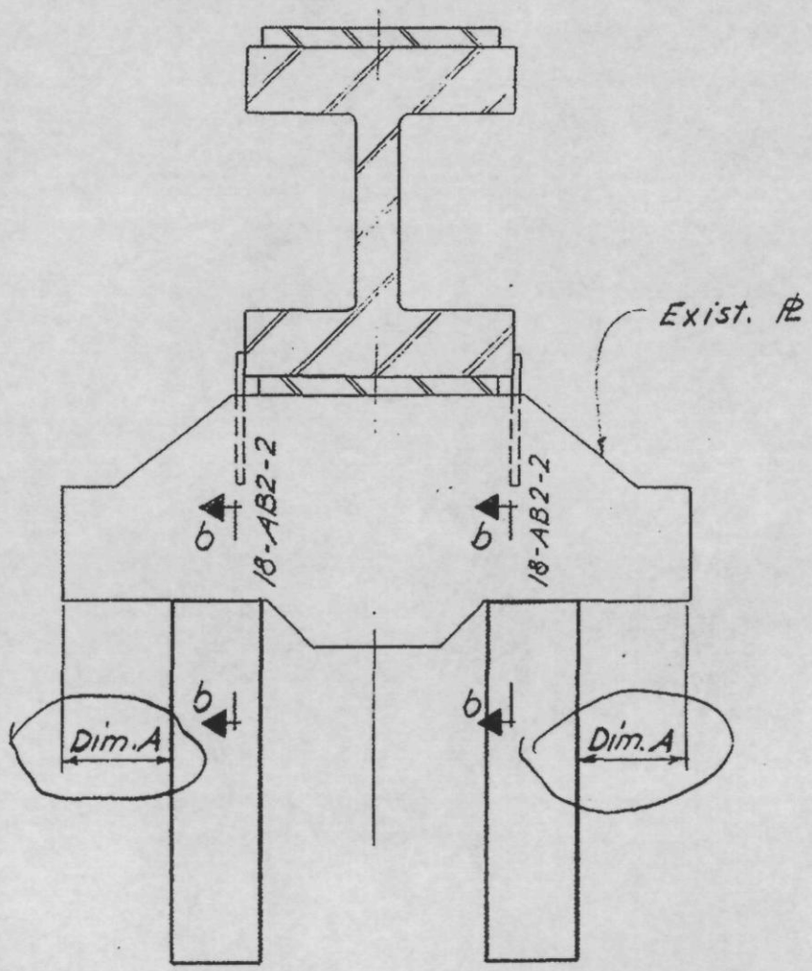

LICENSED PROFESSIONAL ENGINEER
LESLIE E. ROBERTSON
No. 34360
UNIVERSITY OF THE STATE OF NEW YORK

4

DESIGNED L. Robertson

DRAWN F. Smith

REVIEWED W. Brewer

18-AB2-34

SKILLING, HELLE, CHRISTIANSEN, ROBERTSON — Structural & Civil Engineers

PROJECT THE WORLD TRADE CENTER | TITLE STRAP ANCHORS - CORE - DETAIL 35 | DATE 2-7-69

REVISIONS

4-30-69

Detail No.	Strap	Studs	Elev.	Dim. A	Section ①	Section ②
35.1	4" × ½" × 4'-0"	5/8"	(-3½)	5"	C-C	C-C
35.2	4" × ½" × 4'-0"	5/8"	(-3½)	4½"	—	C-C
35.3	4" × ½" × 4'-0"	5/8"	(-3½)	½"	C-C	C-C
35.4	4" × ½" × 4'-0"	5/8"	(-3½)	½"	e-e	C-C

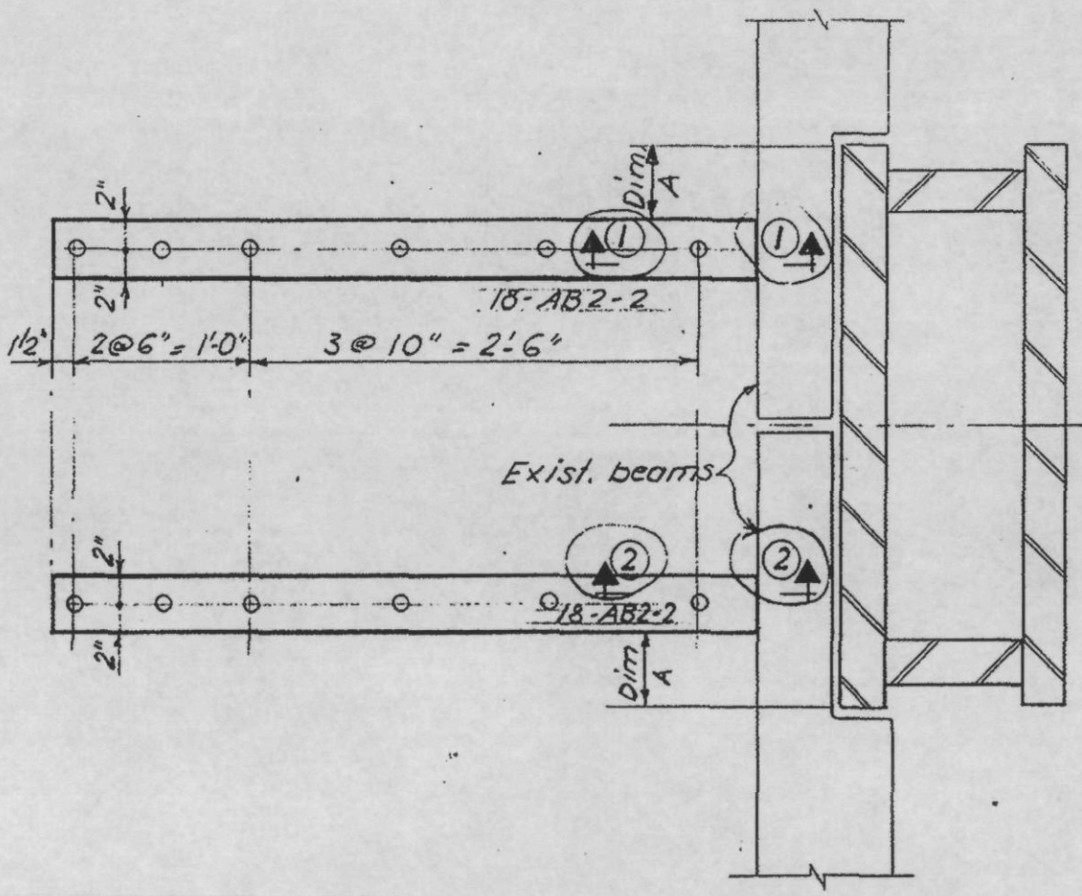

DETAIL 35.1, 35.3 & 35.4

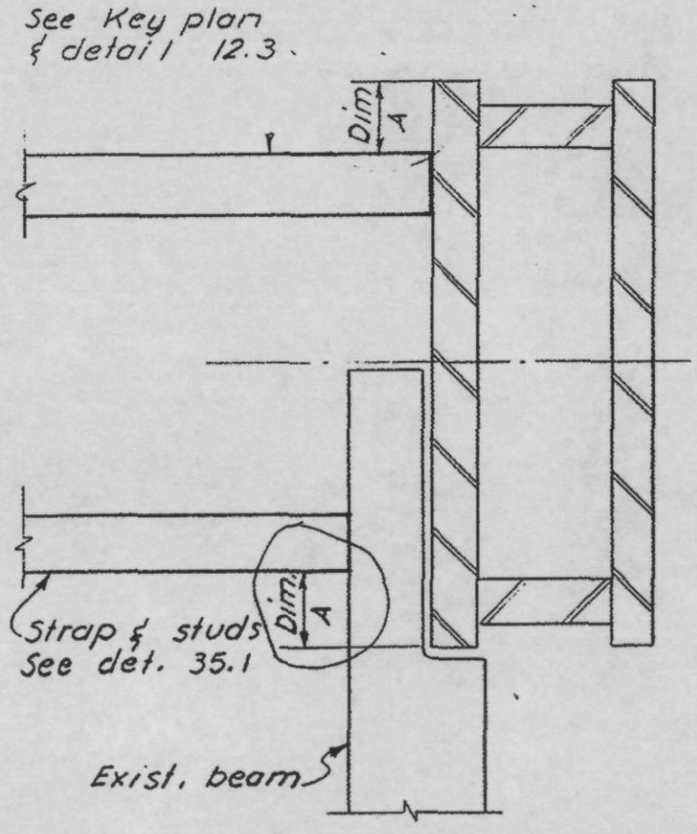

DETAIL 35.2

LICENSED PROFESSIONAL ENGINEER — LESLIE E. ROBERTSON — No. 34360 — UNIVERSITY OF THE STATE OF NEW YORK

DESIGNED L. O'Neill

DRAWN F. Smith

REVIEWED W. Brewer

18-AB2-35

SKILLING, HELLE, CHRISTIANSEN, ROBERTSON — Structural & Civil Engineers

PROJECT: THE WORLD TRADE CENTER | TITLE: STRAP ANCHOR - CORE - DETAIL 36 | DATE: 2-7-69

REVISIONS

4-30-69

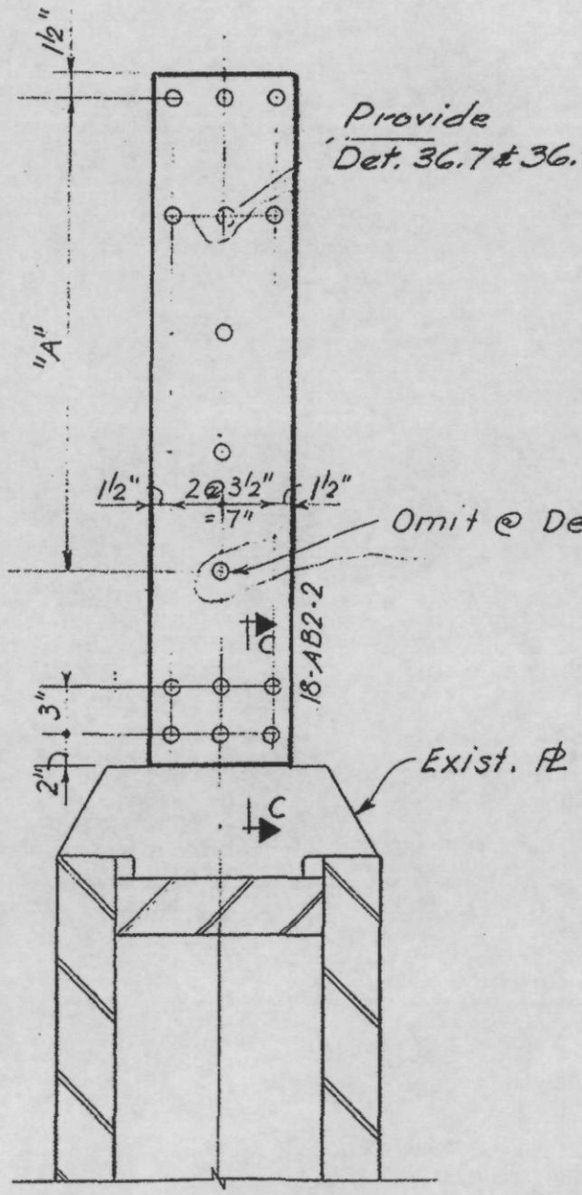

Detail No.	Strap	Studs	Elev.	"A"
36.1	10" x ½" x 3'-10½"	¾"	(-3½)	4 @ 8" = 2'-8"
36.2	10" x ½" x 3'-4½"	¾"	(-3½)	4 @ 7" = 2'-4"
36.3	10" x ½" x 3'-0½"	¾"	(-3½)	4 @ 6" = 2'-0"
36.4	10" x ½" x 2'-8½"	¾"	(-3½)	4 @ 5" = 1'-8"
36.5	10" x ½" x 3'-3½"	¾"	(-3½)	4 @ 7" = 2'-4"
36.6	10" x ½" x 2'-4½"	¾"	(-3½)	4 @ 4" = 1'-4"
36.7	10" x ½" x 1'-8½"	¾"	(-3½)	3 @ 3½" = 10½"
36.8	10" x ½" x 2'-7½"	¾"	(-3½)	4 @ 4¾" = 1'-7"
36.9	10" x ½" x 1'-10½"	¾"	(-3½)	4 @ 3" = 1'-0"
36.10	10" x ½" x 2'-9½"	¾"	(-3½)	4 @ 5" = 1'-8"
36.11	10" x ½" x 3'-6½"	¾"	(-3½)	4 @ 7" = 2'-4"

LICENSED PROFESSIONAL ENGINEER
LESLIE E. ROBERTSON
No. 34380
UNIVERSITY OF THE STATE OF NEW YORK

RB

DESIGNED: L O'Neill

DRAWN: F. Smith

REVIEWED: W. Brewer

18-AB2-36

SKILLING, HELLE, CHRISTIANSEN, ROBERTSON — Structural & Civil Engineers

PROJECT: THE WORLD TRADE CENTER | TITLE: STRAP ANCHORS - CORE - DETAIL 37 | DATE: 2-7-69

REVISIONS

4-30-69

Detail No.	"A"
37 A	8@6" - 4'-0"
37 B	8@7" = 4'-8"
37 C	8@7½" - 5'-0"
37 D	8@8" = 5'-4"
37 E	8@9" = 6'-0"

Floor side

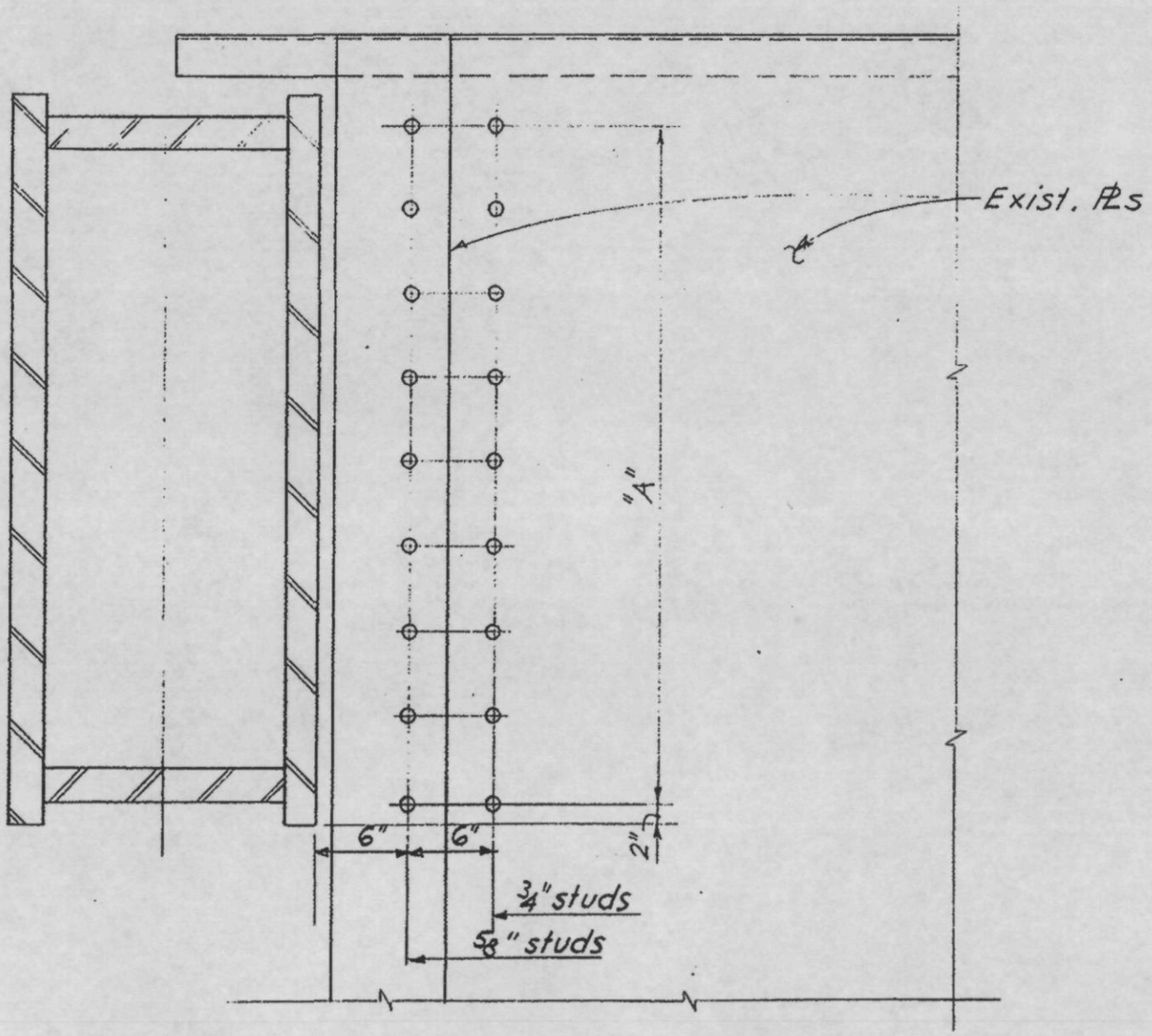

Core side

LICENSED PROFESSIONAL ENGINEER
LESLIE E. ROBERTSON
No. 34360
UNIVERSITY OF THE STATE OF NEW YORK

DESIGNED L. O'Neill

DRAWN F. Smith

REVIEWED W. Brewer

18-AB2 - 37

SKILLING, HELLE, CHRISTIANSEN, ROBERTSON . Structural & Civil Engineers

PROJECT THE WORLD TRADE CENTER | TITLE STRAP ANCHOR - CORE - DETAIL 38 | DATE 2-7-69

REVISIONS

4-30-69

Detail No	N
38.1	2
38.2	1

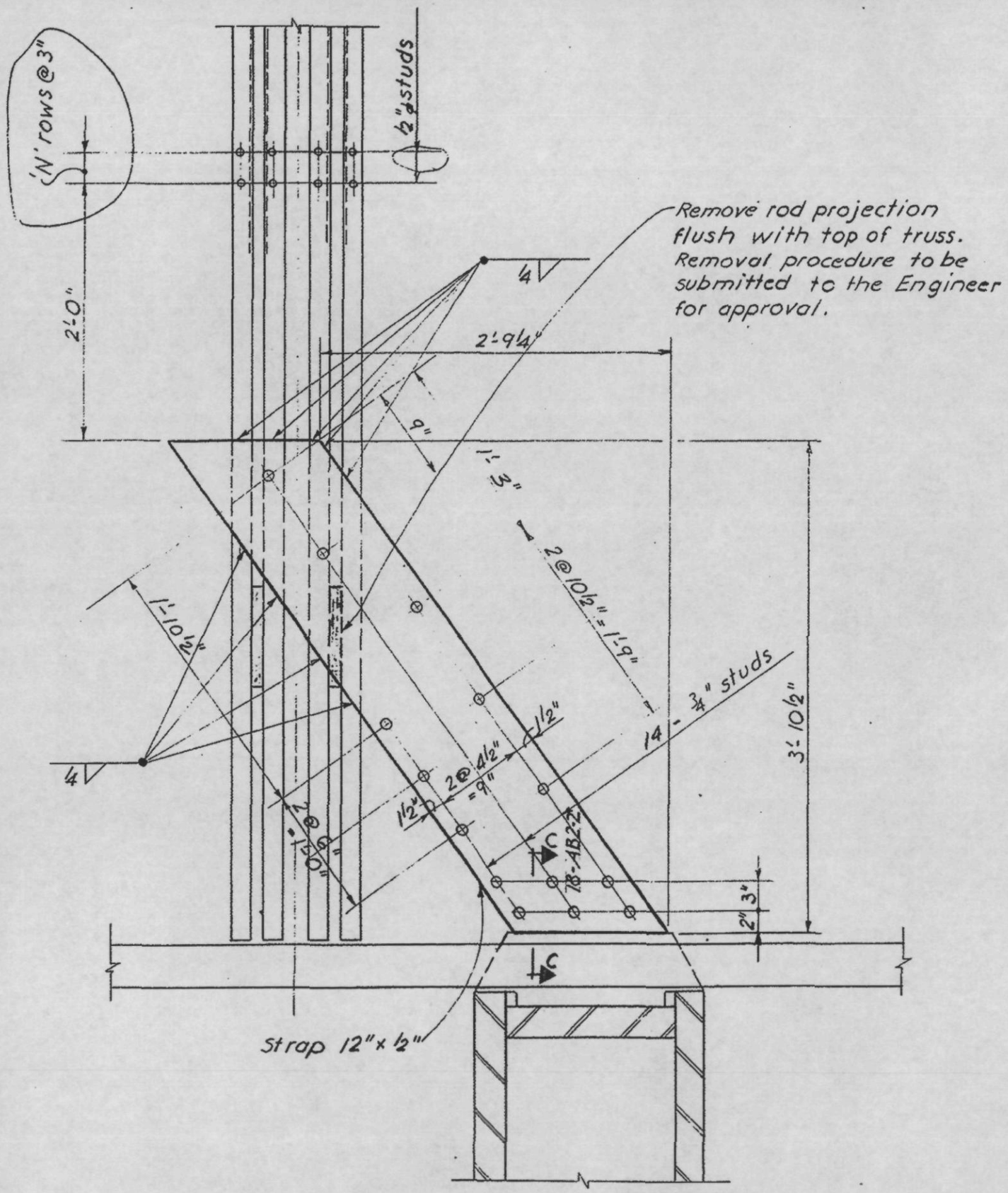

LICENSED PROFESSIONAL ENGINEER
LESLIE E. ROBERTSON
No. 34360
UNIVERSITY OF THE STATE OF NEW YORK

DESIGNED
L. O'Neill

DRAWN
F. Smith

REVIEWED
W. Brewer

18-AB2-38

SKILLING, HELLE, CHRISTIANSEN, ROBERTSON — Structural & Civil Engineers

PROJECT: FIFTH AVENUE TRADE CENTER | TITLE: STEEL ANCHOR - CORE - DETAIL 39 | DATE: 2-7-69

REVISIONS

4/30/69

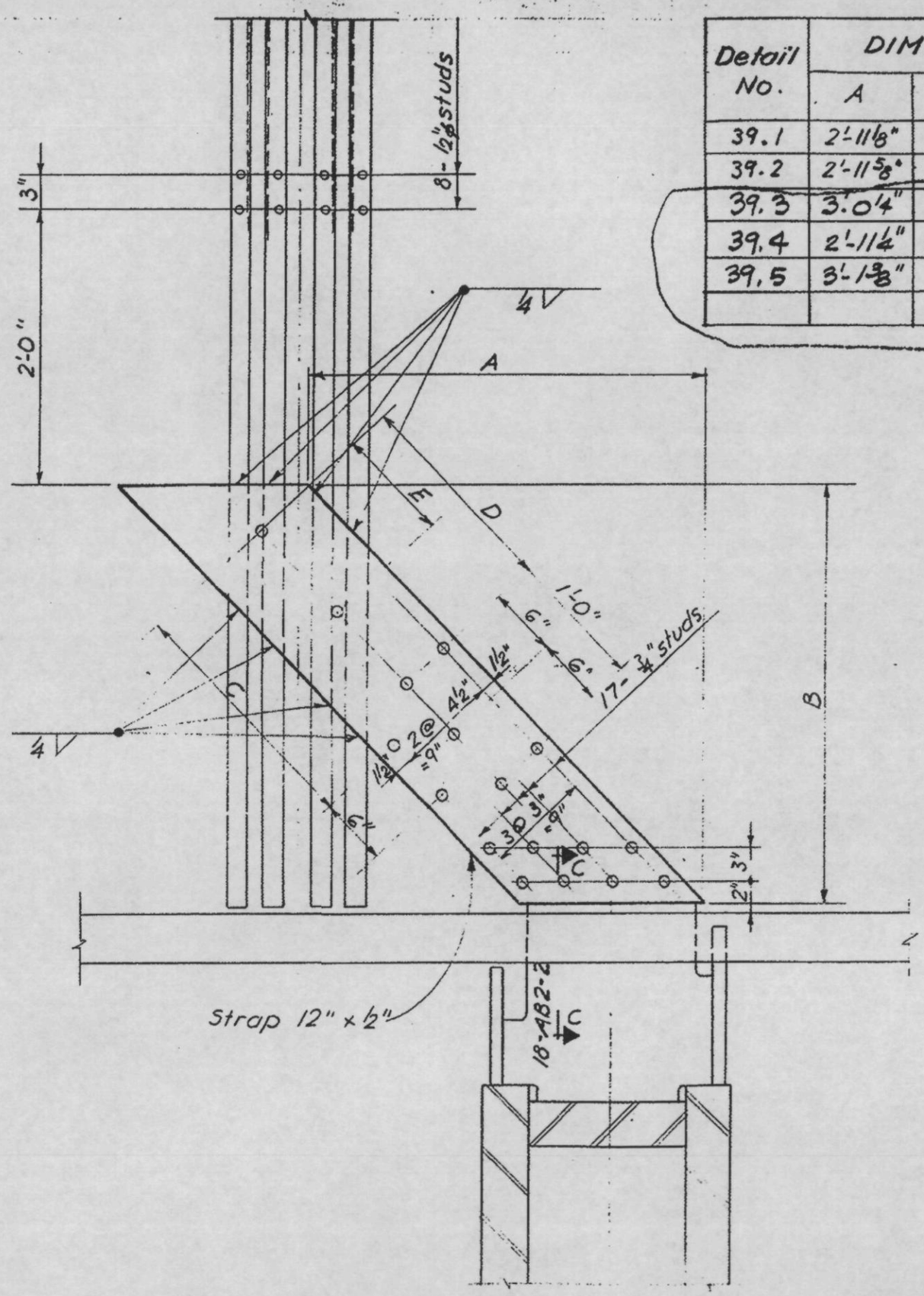

Detail No.	DIMENSION SCHEDULE				
	A	B	C	D	E
39.1	2'-11⅛"	3'-4½"	1'-9"	1'-6"	1'-0"
39.2	2'-11⅝"	3'-0½"	1'-6"	1'-3"	10"
39.3	3.0¼"	2'-7½"	1'-4"	1'-2"	9"
39.4	2'-11¼"	3'-3½"	1'-8"	1'-5"	1'-0"
39.5	3'-1⅜"	1'-10½"	1'-0"	0'-10"	7"

LICENSED PROFESSIONAL ENGINEER — LESLIE E. ROBERTSON — No. 34360 — UNIVERSITY OF THE STATE OF NEW YORK

DESIGNED: O'Neill

DRAWN: T. Smith

REVIEWED: W. Brewer

18-AB2-39

SKILLING, HELLE, CHRISTIANSEN, ROBERTSON — Structural & Civil Engineers

PROJECT: THE WORLD TRADE CENTER | TITLE: STRAP ANCHOR - CORE - DETAIL 40 | DATE: 4/30/69

REVISIONS

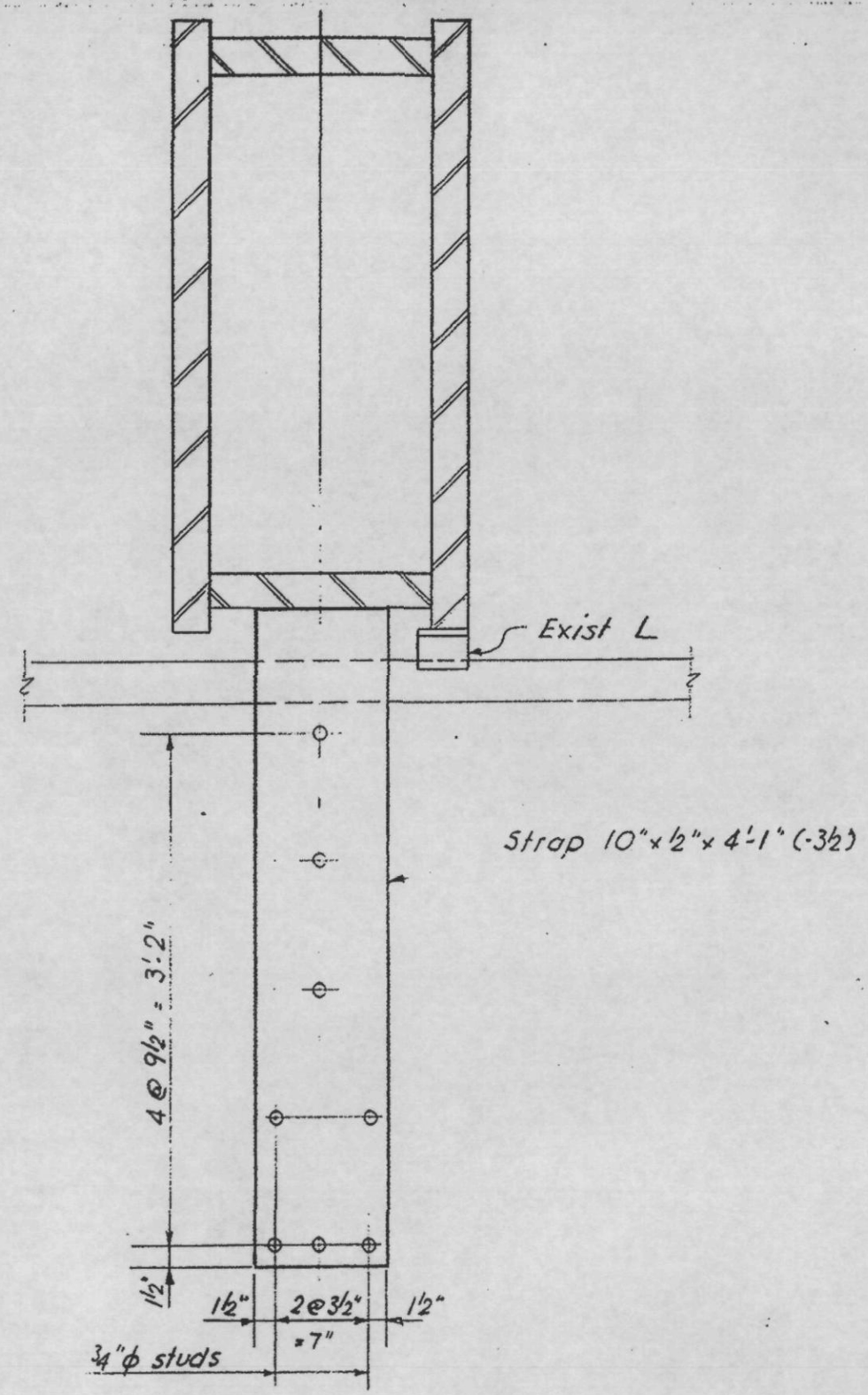

Strap 10" x ½" x 4'-1" (-3½)

LICENSED PROFESSIONAL ENGINEER
LESLIE E. ROBERTSON
No. 34360
UNIVERSITY OF THE STATE OF NEW YORK

DESIGNED

DRAWN
F. Smith

REVIEWED
W. Brewer

18-AB2-40

SELLING HELLE CHRISTIANSEN ROBERTSON — STRUCTURAL & CIVIL ENGINEERS

PROJECT: THE WORLD TRADE CENTER

TITLE: SLEEVE ANCHOR CORE DETAIL 41A THRU 41G

DRAWING NO.

REVISIONS

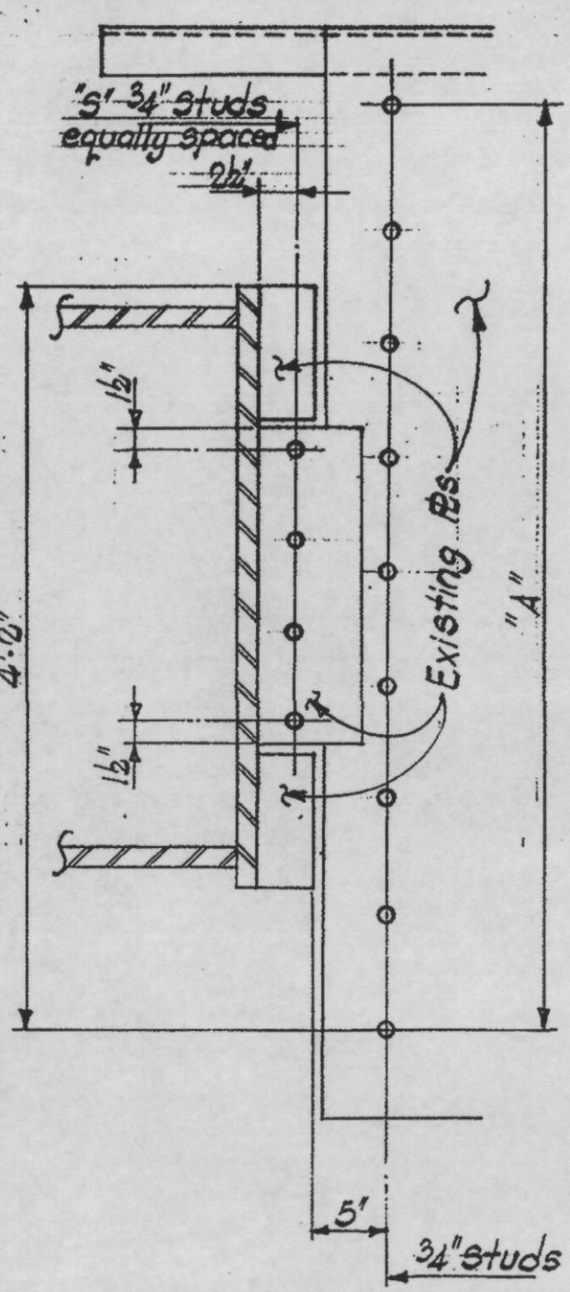

DETAIL 41A THRU 41D

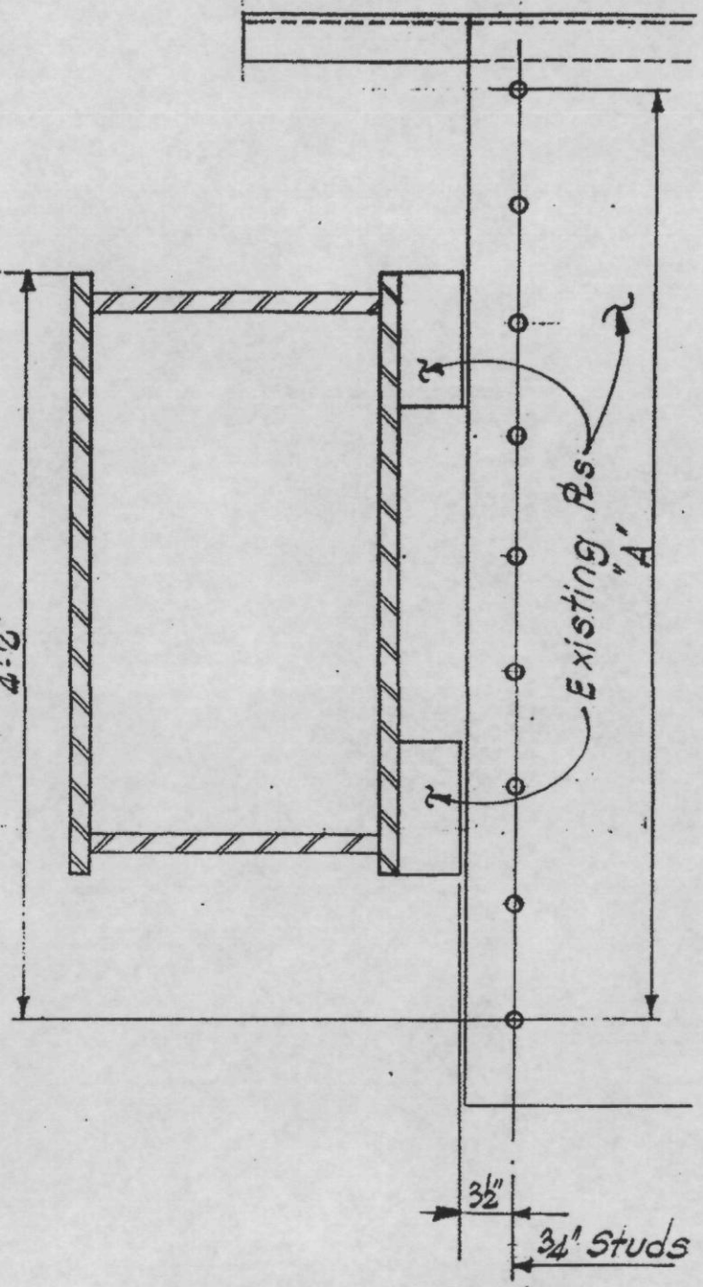

DETAIL 41E & 41F

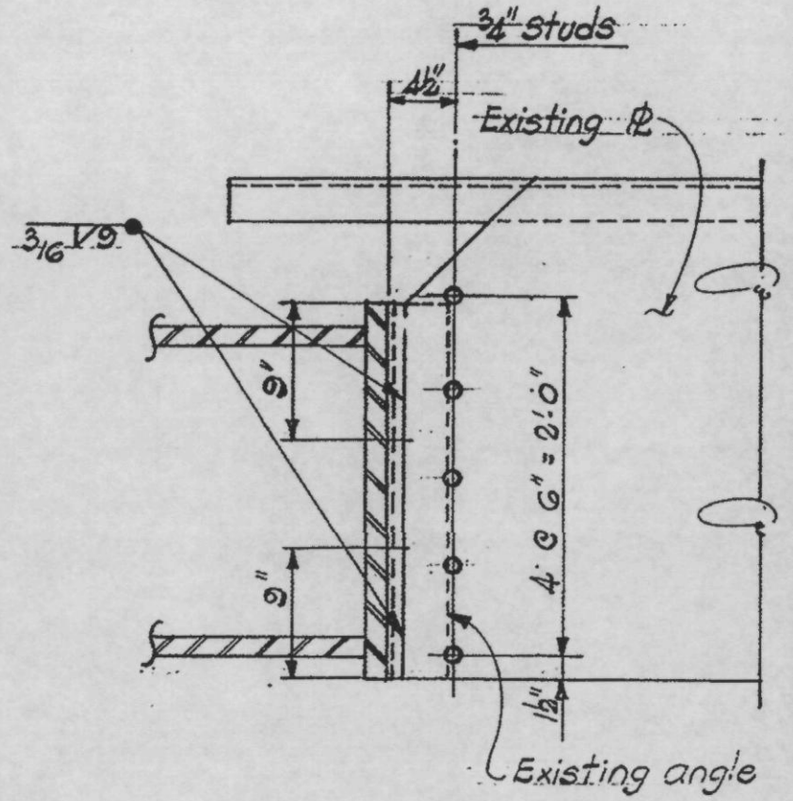

DETAIL 41G

DETAIL No.	"A"	"S"
41A	8 @ 6" = 4'-0"	4
41B	8 @ 7" = 4'-8"	3
41C	8 @ 8½" = 5'-8"	3
41D	8 @ 9½" = 6'-4"	3
41E	8 @ 9½" = 6'-4"	—
41F	8 @ 7½" = 5'-0"	—

LICENSED PROFESSIONAL ENGINEER
LESLIE E. ROBERTSON
No. 34360
UNIVERSITY OF THE STATE OF NEW YORK

DESIGNED

DRAWN
S.T.M.

REVIEWED
W. Brewer

18-AB2-41

SKILLING, HELLE, CHRISTIANSEN, ROBERTSON — Structural & Civil Engineers

PROJECT: THE WORLD TRADE CENTER | TITLE: STRAP ANCHOR - CORE - DETAIL 42 | DATE: 4/30/69

REVISIONS

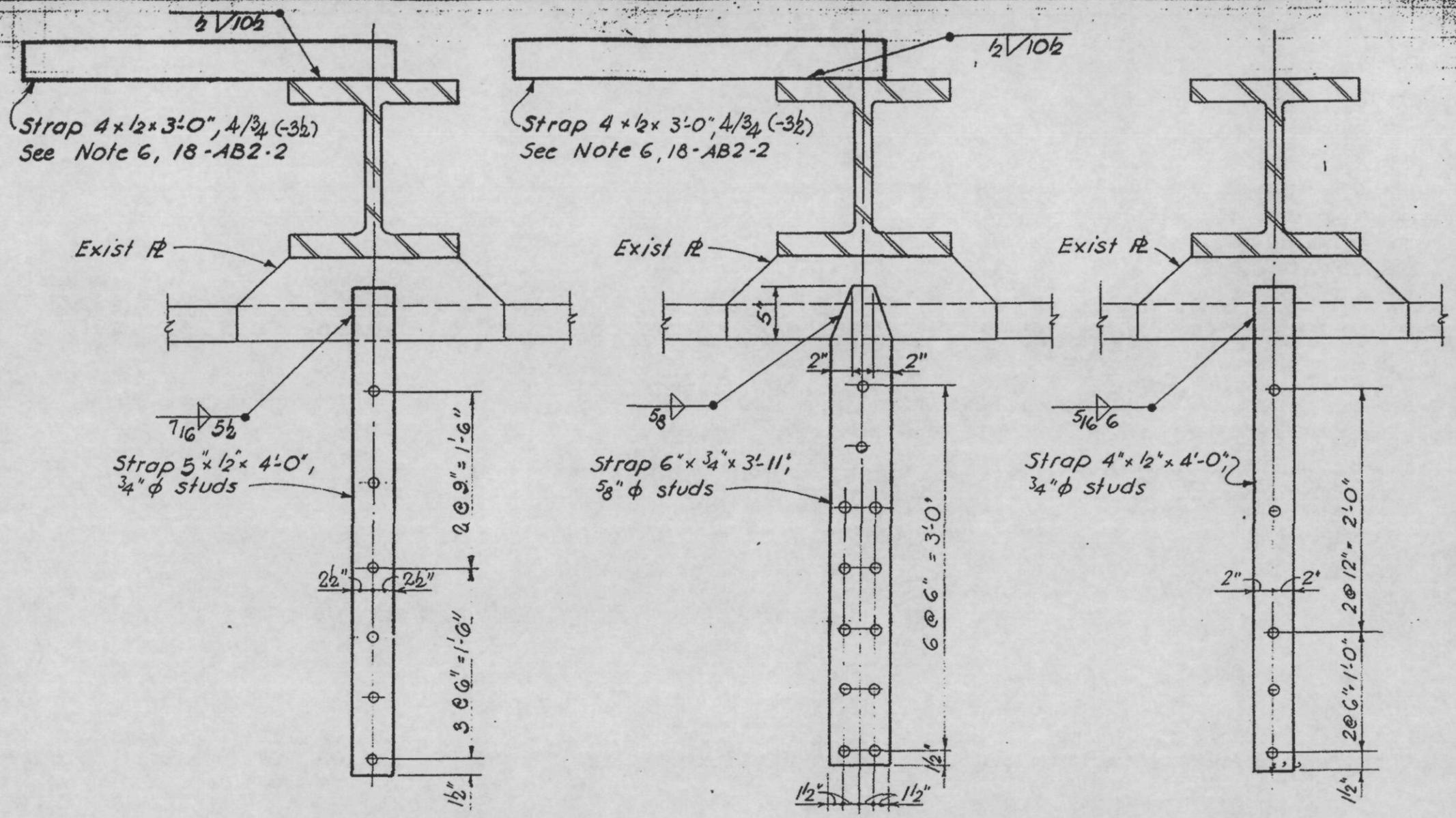

DETAIL 42.1 DETAIL 42.2 DETAIL 42.3

LICENSED PROFESSIONAL ENGINEER
LESLIE E. ROBERTSON
No. 34360
UNIVERSITY OF THE STATE OF NEW YORK

DESIGNED

DRAWN
F. Smith

REVIEWED
W. Brewer

18-AB2-42.1

SKILLING, HELLE, CHRISTIANSEN, ROBERTSON — Structural & Civil Engineers

PROJECT: THE WORLD TRADE CENTER | TITLE: STRAP ANCHOR CORE DETAIL 42 | DATE: 4/30/69

REVISIONS

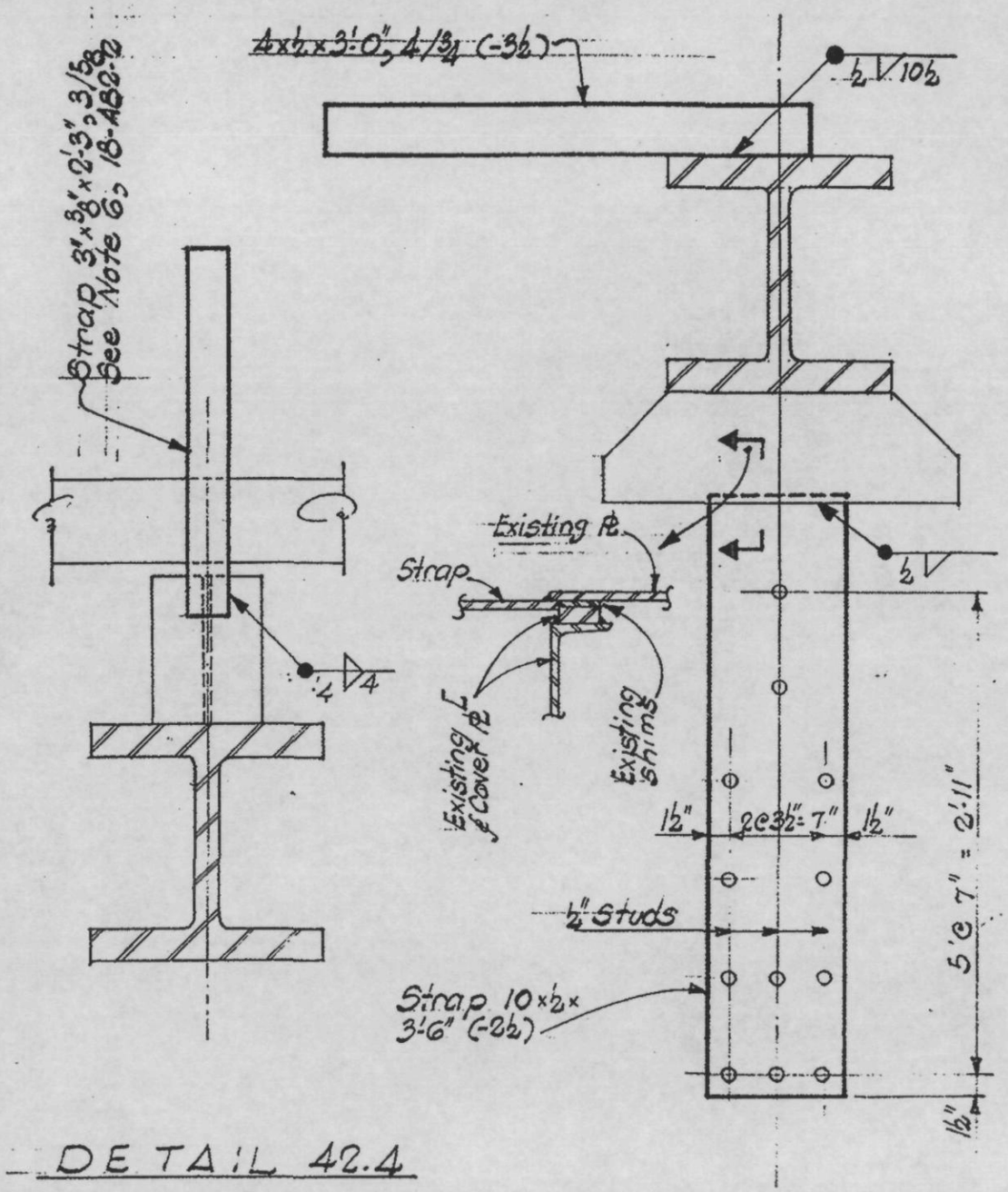

DETAIL 42.4

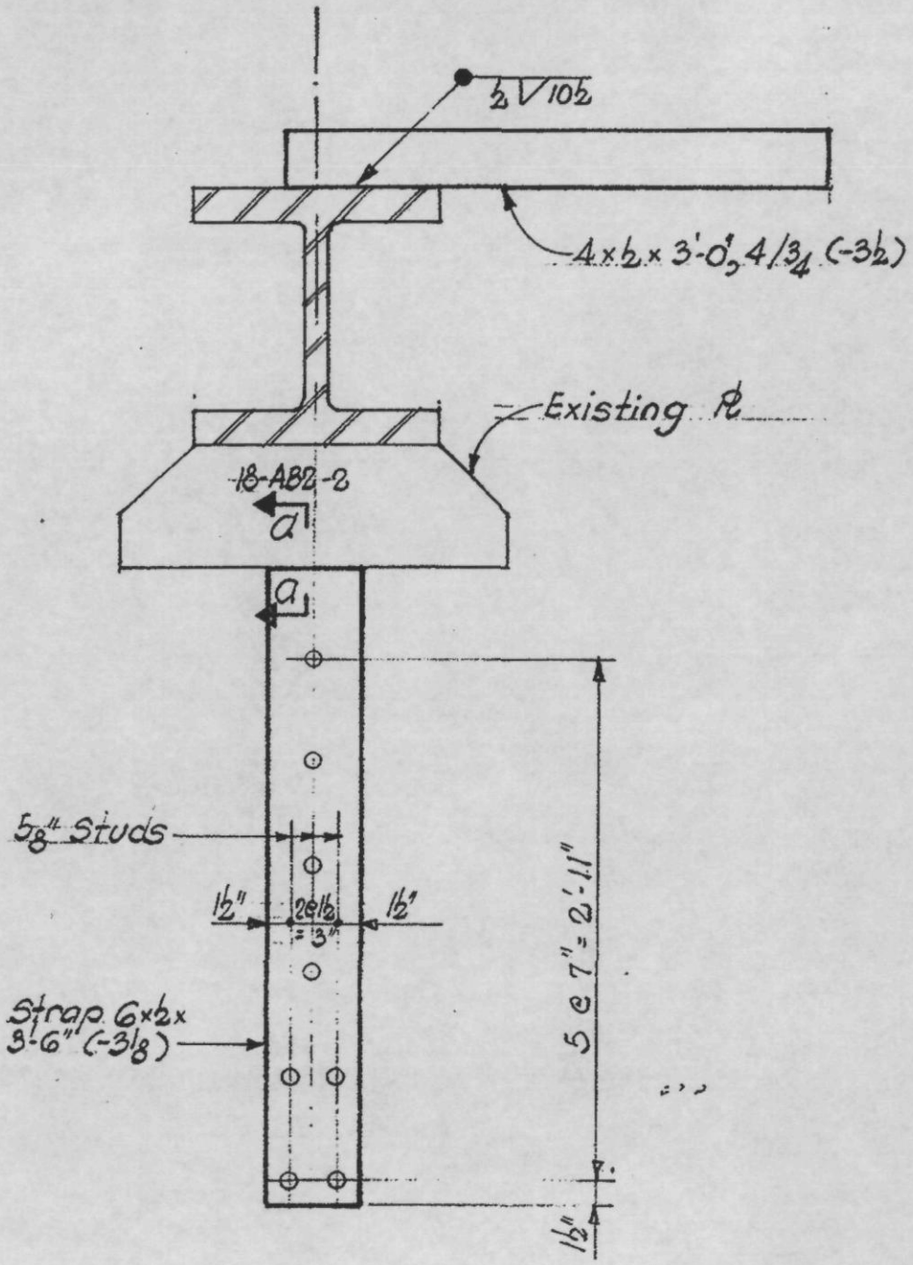

DETAIL 42.5

DETAIL 42.6

LICENSED PROFESSIONAL ENGINEER — LESLIE E. ROBERTSON — No. 34360 — UNIVERSITY OF THE STATE OF NEW YORK

DESIGNED

DRAWN S.T.M.

REVIEWED W. Brewer

18-ABZ-42.2

SKILLING, HELLE, CHRISTIANSEN, ROBERTSON — Structural & Civil Engineers

PROJECT THE WORLD TRADE CENTER | TITLE STRAP ANCHOR DETAIL 42 | DATE 4/30/69

REVISIONS

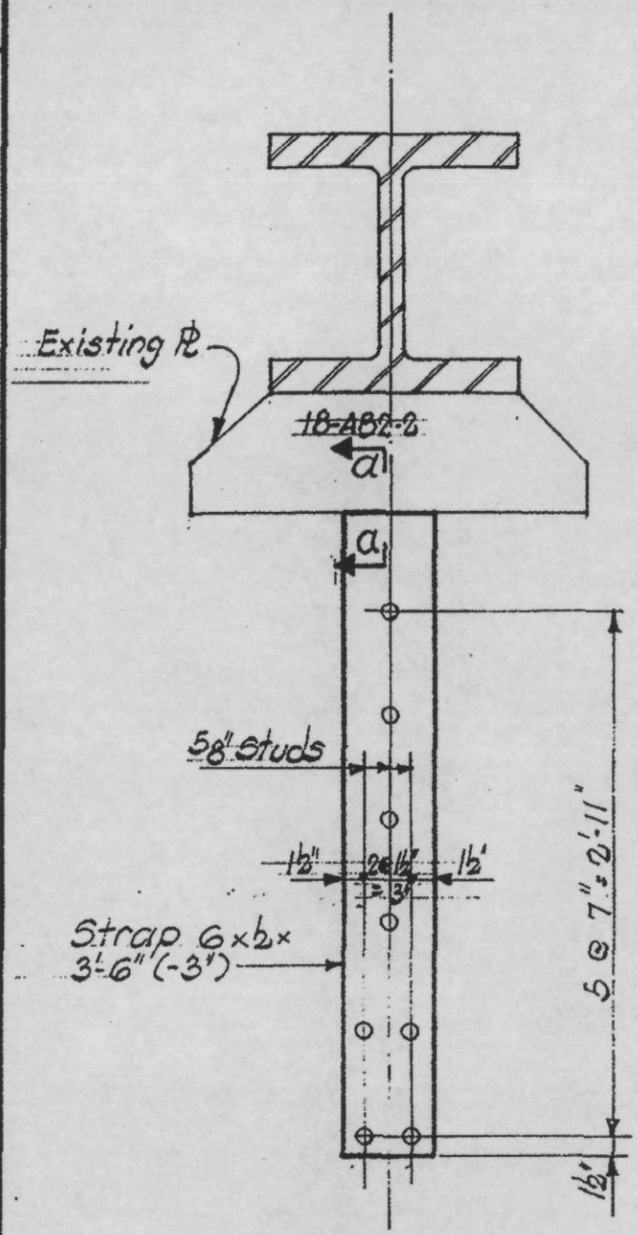

DETAIL 42.7

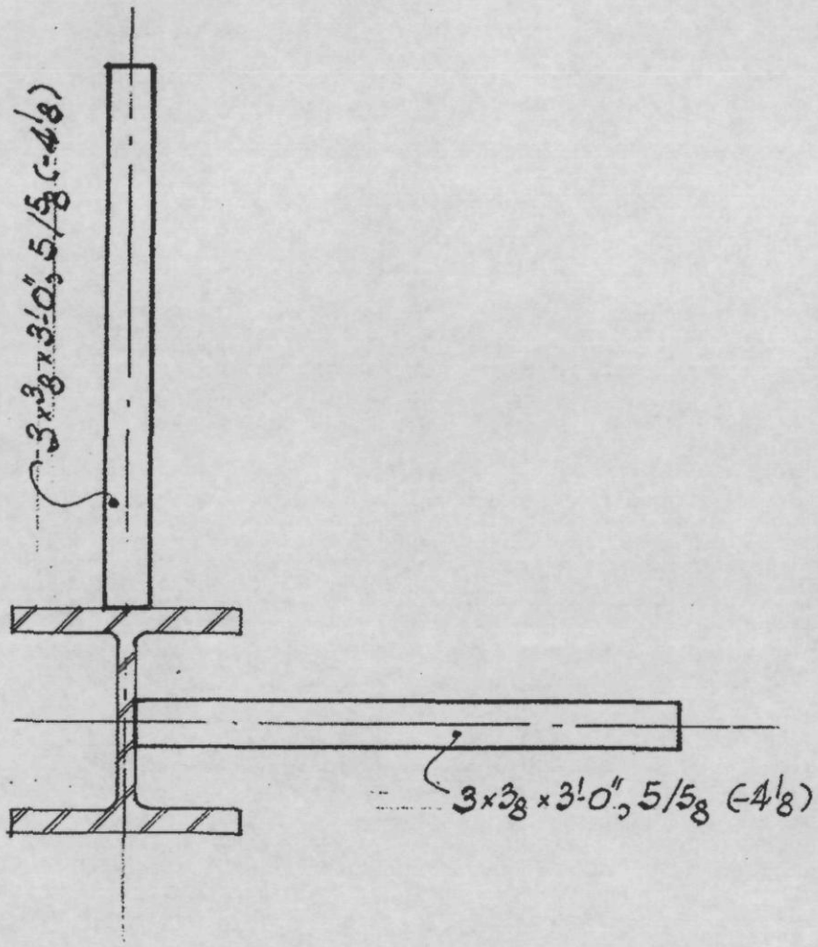

DETAIL 42.8

LICENSED PROFESSIONAL ENGINEER
LESLIE E. ROBERTSON
No. 34360
UNIVERSITY OF THE STATE OF NEW YORK

24

DESIGNED

DRAWN
S.T.M.

REVIEWED
W. Brewer

18-A82-42.3

SKILLING, HELLE, CHRISTIANSEN, ROBERTSON — Structural & Civil Engineers

PROJECT THE WORLD TRADE CENTER | TITLE STRAP ANCHOR DETAIL #3 | DATE 4/30/69

REVISIONS

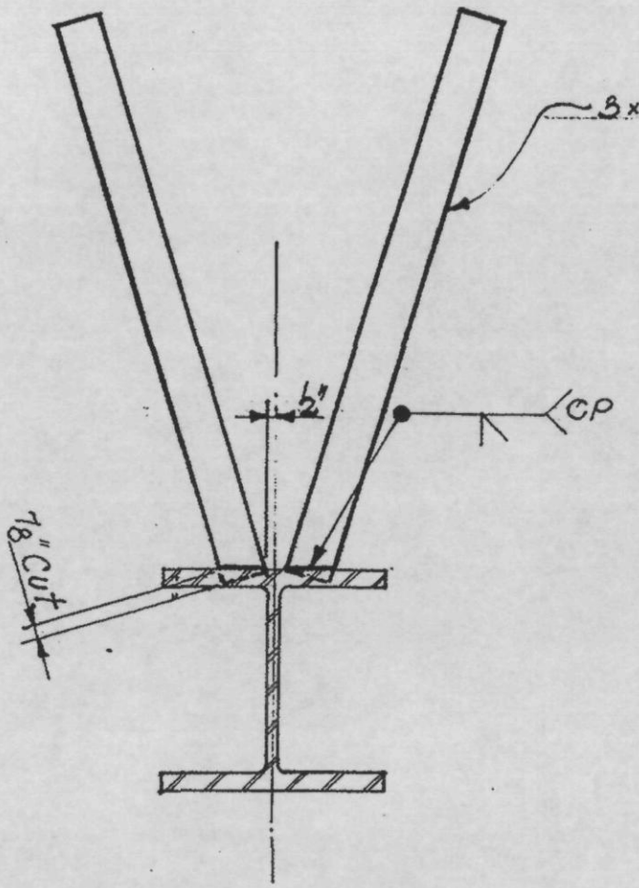

DETAIL 43.1

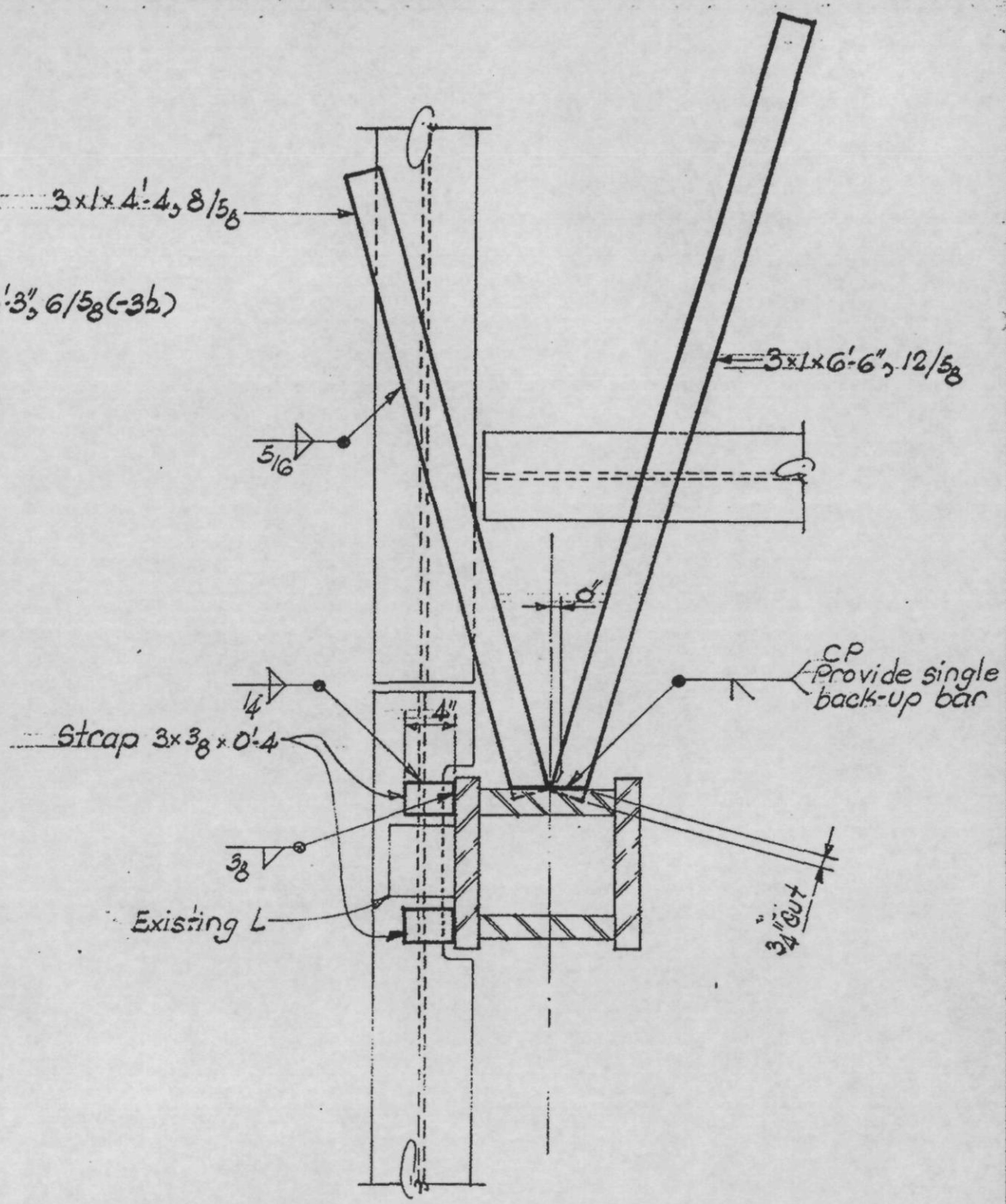

DETAIL 43.2

LICENSED PROFESSIONAL ENGINEER — LESLIE E. ROBERTSON — No. 34360 — UNIVERSITY OF THE STATE OF NEW YORK

65

DESIGNED

DRAWN D.T.M.

REVIEWED W. Brewer

18-A62-43

SKILLING, HELLE, CHRISTIANSEN, ROBERTSON — Structural & Civil Engineers

PROJECT: [illegible] TITLE: STRAP ANCHOR - CORE - DETAIL 44 DATE: 3.20.69

REVISIONS

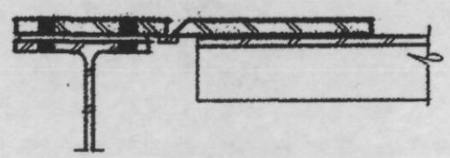

Section a-a

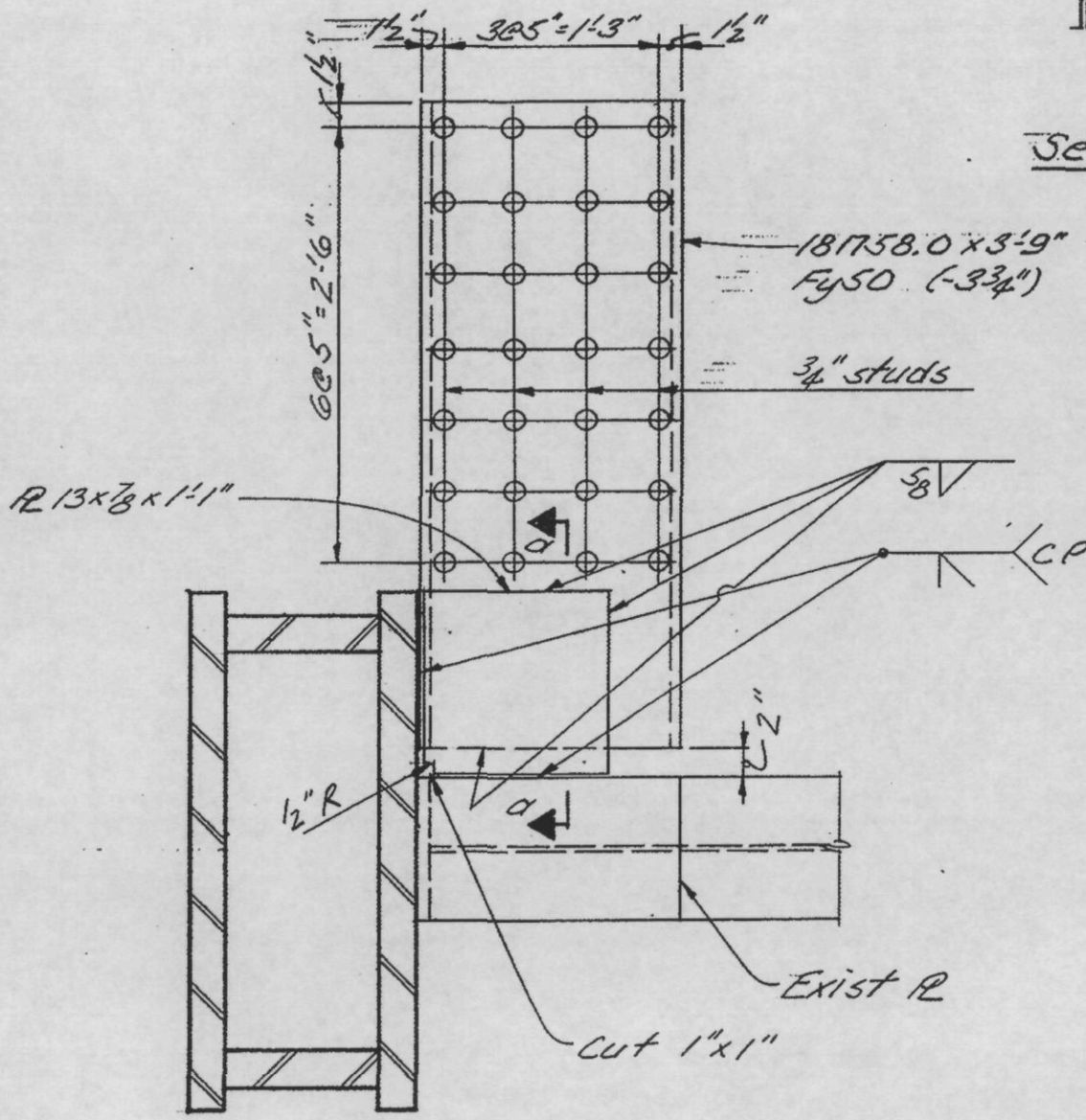

PLAN

LICENSED PROFESSIONAL ENGINEER
LESLIE E. ROBERTSON
No. 34360
UNIVERSITY OF THE STATE OF NEW YORK

DESIGNED: [illegible]
DRAWN: J. Adams
REVIEWED: W. Brewer

18-ABZ-44

SKILLING, HELLE, CHRISTIANSEN, ROBERTSON — Structural & Civil Engineers

PROJECT THE WORLD TRADE CENTER | TITLE STRAP ANCHORS - CORE - DETAIL 50- | DATE 10/16/68

REVISIONS

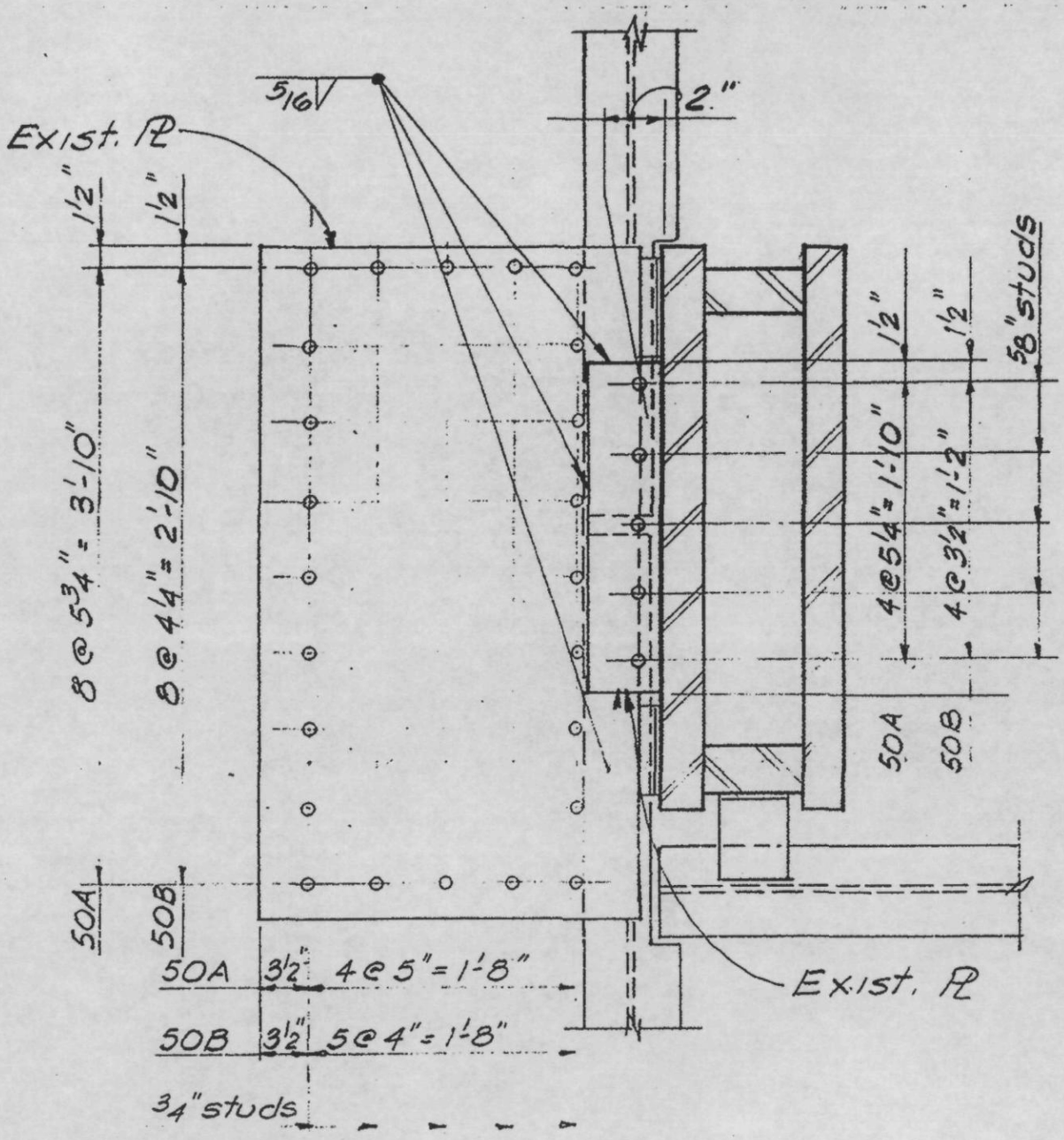

DETAILS 50A, 50B

LICENSED PROFESSIONAL ENGINEER — LESLIE E. ROBERTSON — No. 34360 — UNIVERSITY OF THE STATE OF NEW YORK

DESIGNED O'Neill

DRAWN S. Wexler

REVIEWED W. Brewer

18-AB2-50.1

SKILLING, HELLE, CHRISTIANSEN, ROBERTSON — Structural & Civil Engineers

PROJECT: THE WORLD TRADE CENTER | TITLE: STRAP ANCHORS - CORE - DETAIL 50 | DATE: 10/6/68

REVISIONS

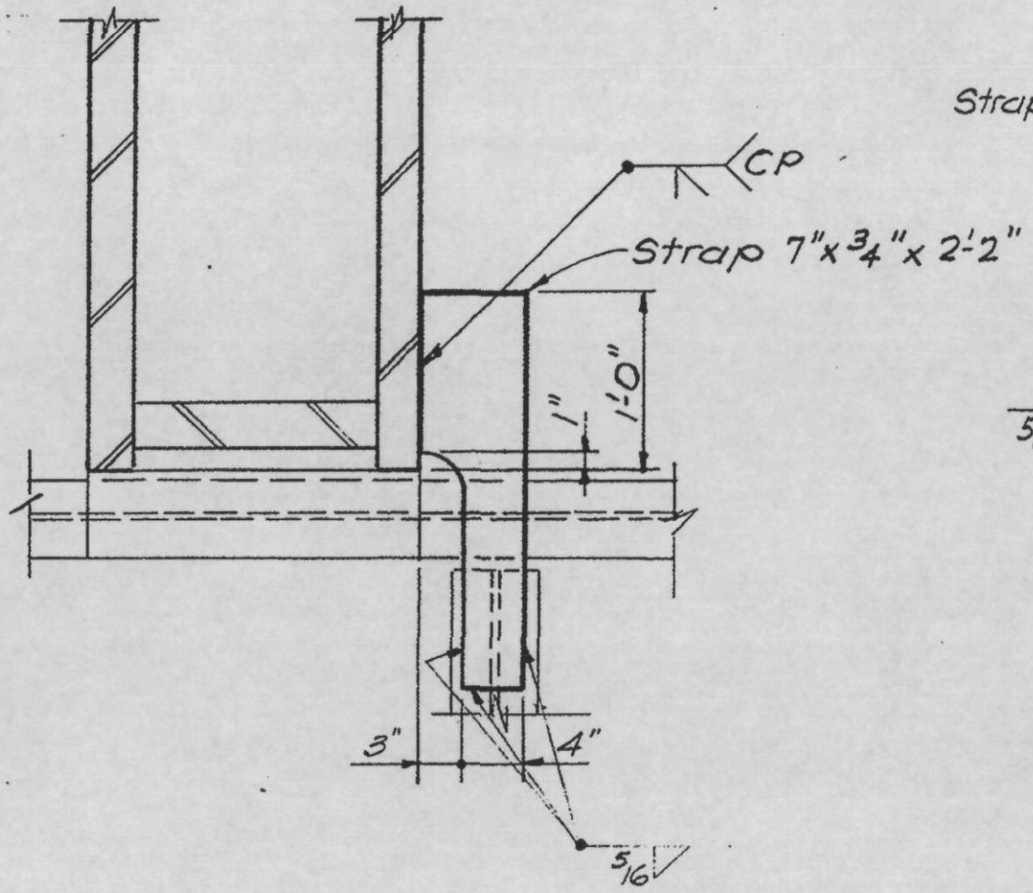

DETAIL 50C

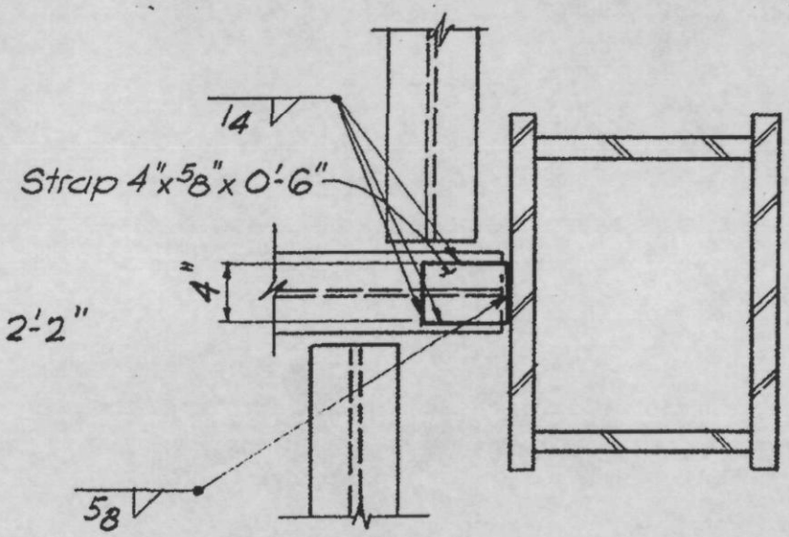

DETAIL 50D

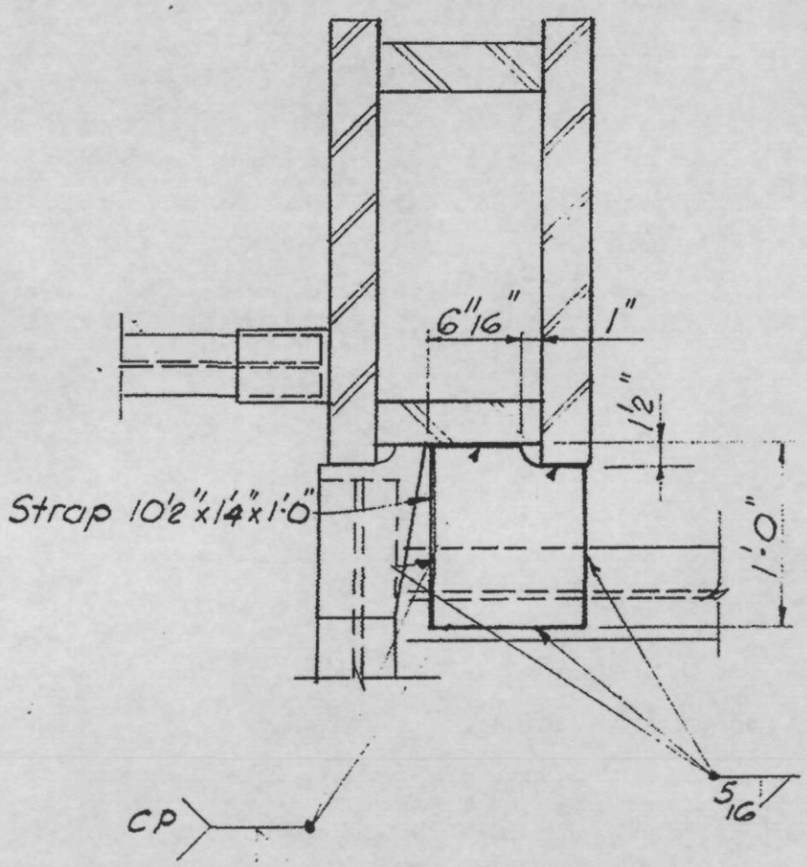

DETAIL 50E

LICENSED PROFESSIONAL ENGINEER
LESLIE E. ROBERTSON
No. 34360
UNIVERSITY OF THE STATE OF NEW YORK

DESIGNED O'Neil
DRAWN S. Wexler
REVIEWED W Brewer

18-AB2-50.2

SKILLING HELLE CHRISTIANSEN ROBERTSON — Structural & Civil Engineers

PROJECT THE WORLD TRADE CENTER | TITLE STRAP ANCHORS - CORE - DETAIL 51 | DATE 10/30/68

REVISIONS

2-7-69

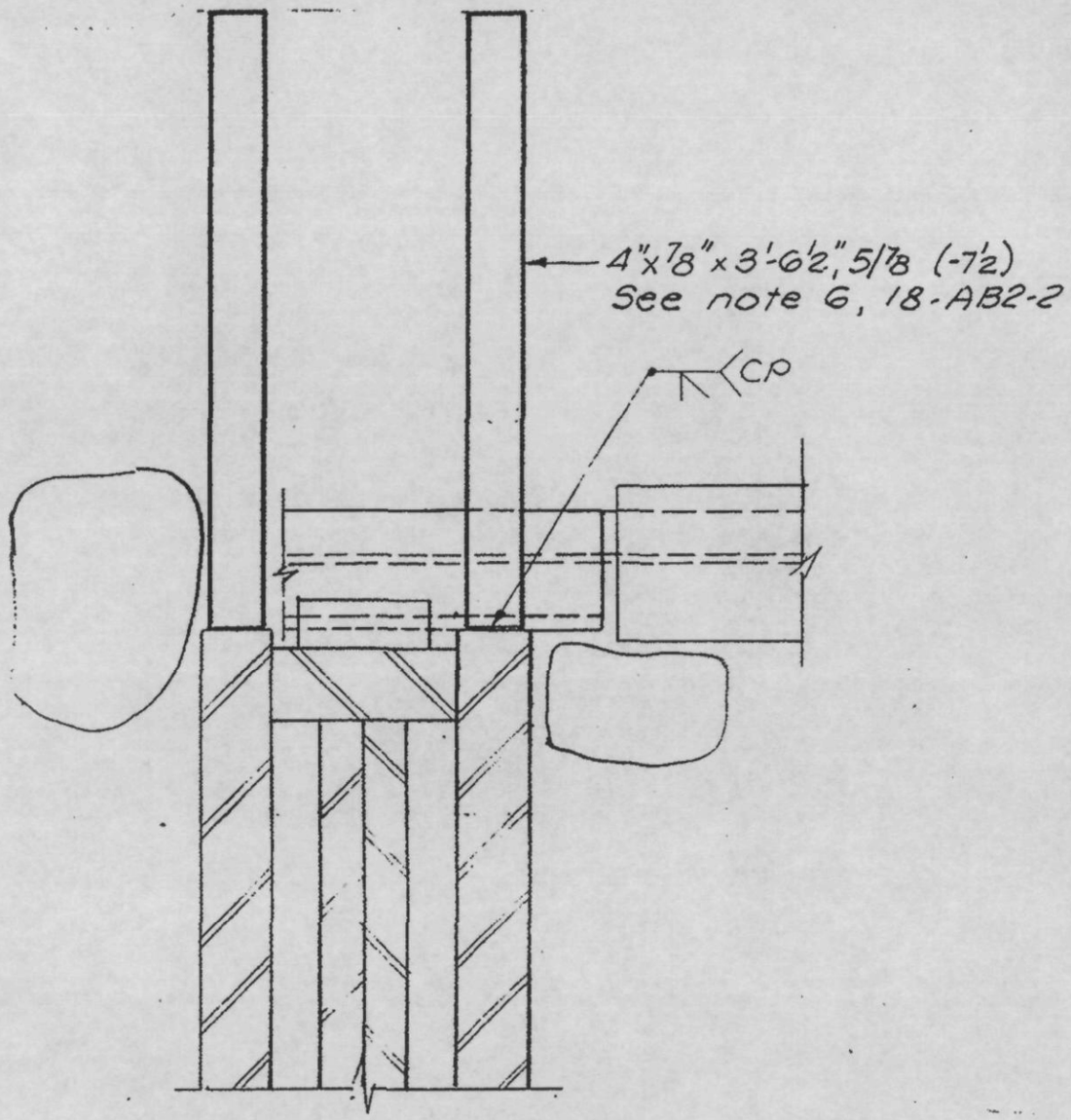

DETAIL 51A

LICENSED PROFESSIONAL ENGINEER
LESLIE E. ROBERTSON
No. 34960
UNIVERSITY OF THE STATE OF NEW YORK

DESIGNED
T O'Neill

DRAWN
S Wexler

REVIEWED
W. Brewer

18-AB2-51.1

SKILLING HELLE CHRISTIANSEN ROBERTSON — Structural & Civil Engineers

PROJECT THE WORLD TRADE CENTER | TITLE STEAP ANCHORS - CORE - DETAIL 51 | DATE 10/30/68

REVISIONS

2-7-69

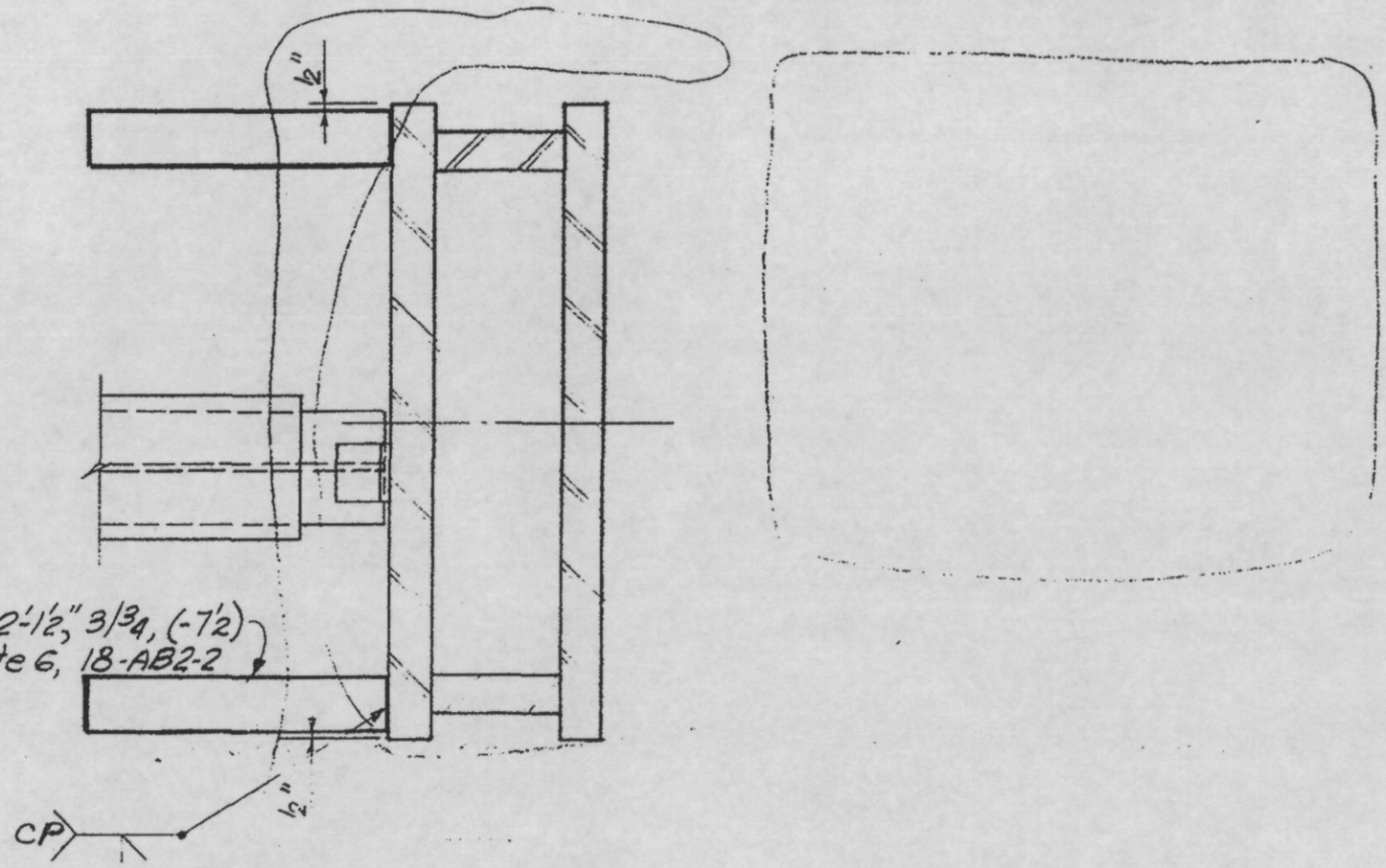

DETAIL 51 B

LICENSED PROFESSIONAL ENGINEER
LESLIE E. ROBERTSON
No. 34360
UNIVERSITY OF THE STATE OF NEW YORK

DESIGNED O'Neill
DRAWN S. Wexler
REVIEWED W. Brewer

18-AB2-51.2

SKILLING, HELLE, CHRISTIANSEN, ROBERTSON — Structural & Civil Engineers

PROJECT THE WORLD TRADE CENTER | TITLE ANCHOR STRAPS - CORE - DETAIL 52 | DATE 10/30/68

REVISIONS

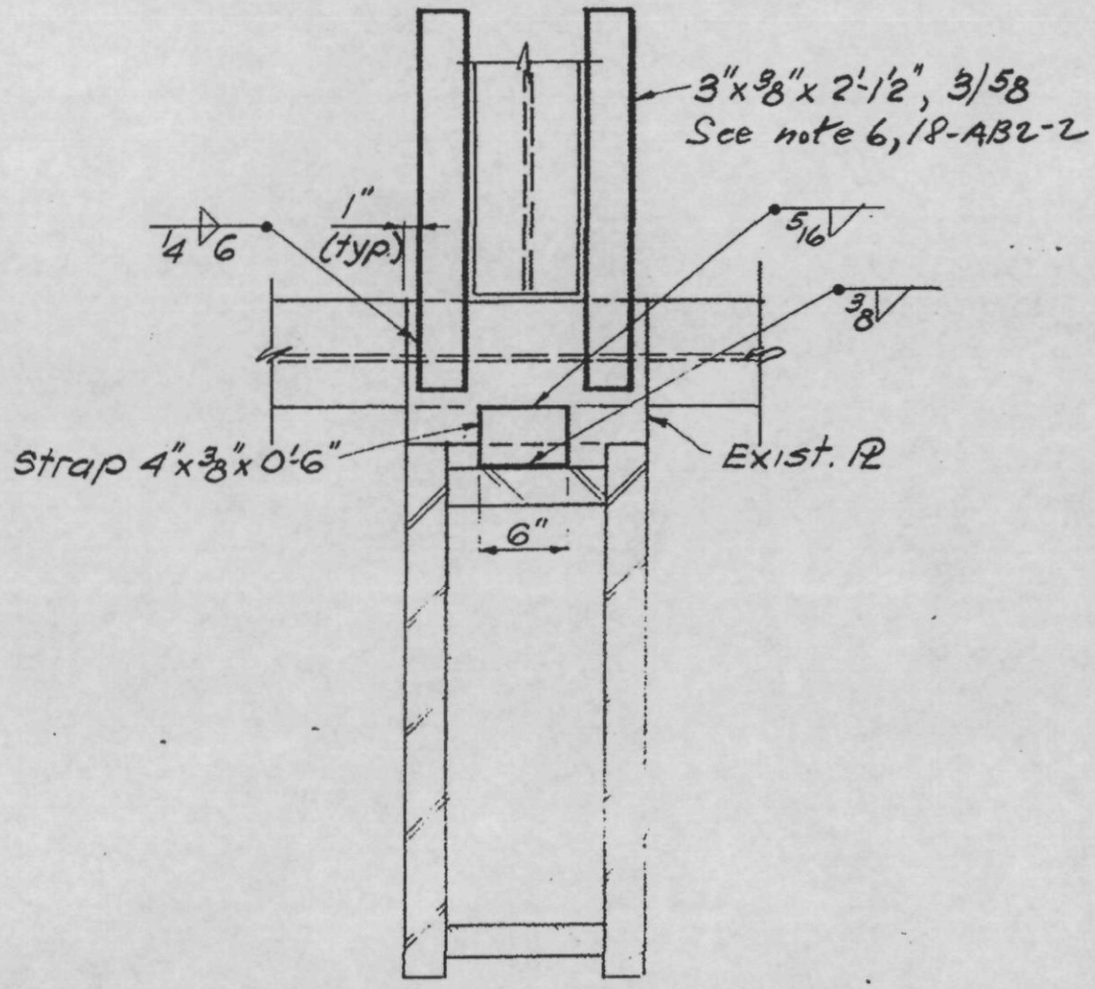

LICENSED PROFESSIONAL ENGINEER — LESLIE E. ROBERTSON — No. 34360 — UNIVERSITY OF THE STATE OF NEW YORK

DESIGNED a. D'Neill

DRAWN S. Wexler

REVIEWED

18-AB2-52

SKILLING HELLE CHRISTIANSEN ROBERTSON Structural & Civil Engineers

PROJECT: THE WORLD TRADE CENTER | TITLE: STRAP ANCHOR - CORE - DETAIL 53 | DATE: 10/30/68

REVISIONS

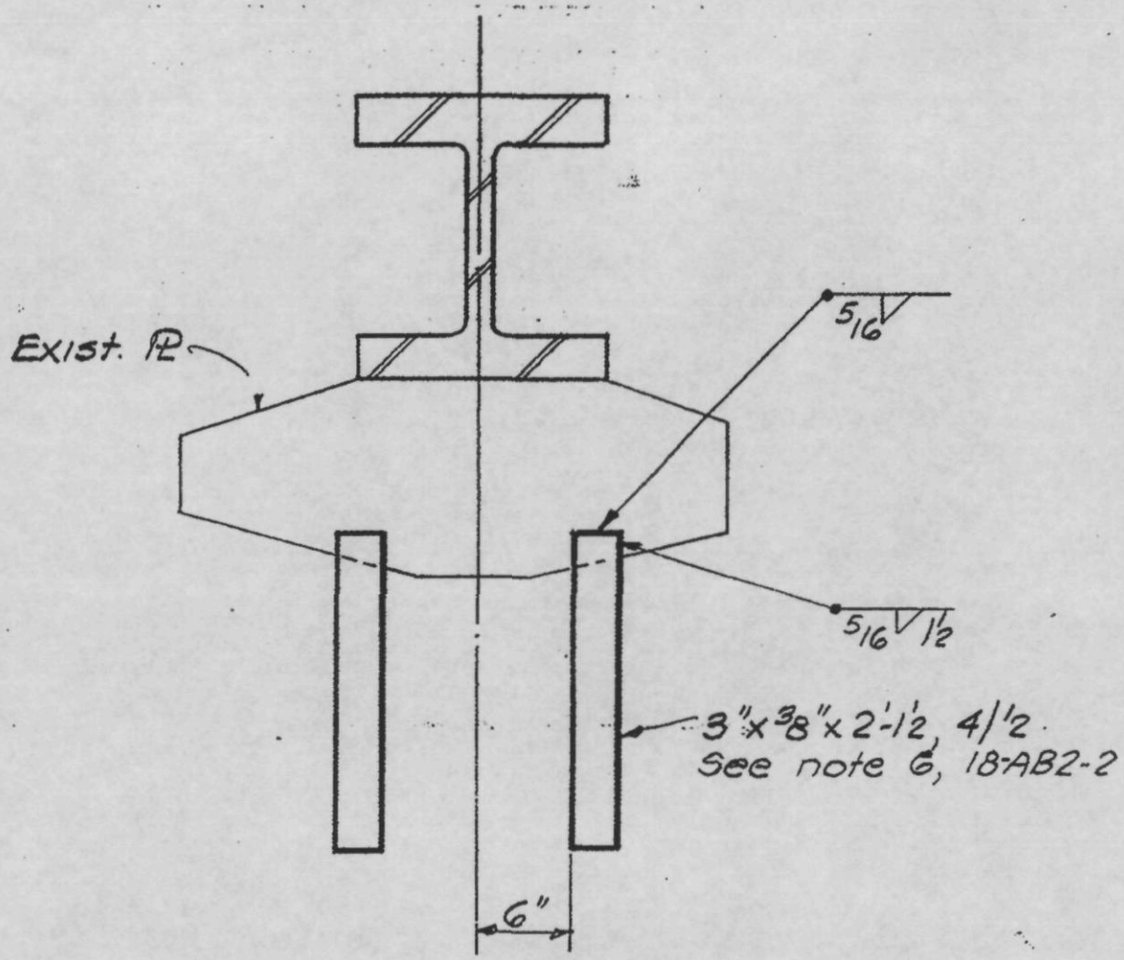

LICENSED PROFESSIONAL ENGINEER
LESLIE E. ROBERTSON
No. 34360
UNIVERSITY OF THE STATE OF NEW YORK

DESIGNED
D Neill

DRAWN
S Wexler

REVIEWED

18-AB2-53

SKILLING, HELLE CHRISTIANSEN, ROBERTSON — Structural & Civil Engineers

PROJECT THE WORLD TRADE CENTER | TITLE STRAP ANCHORS - CORE - DETAIL 54 | DATE 12-13-68

REVISIONS

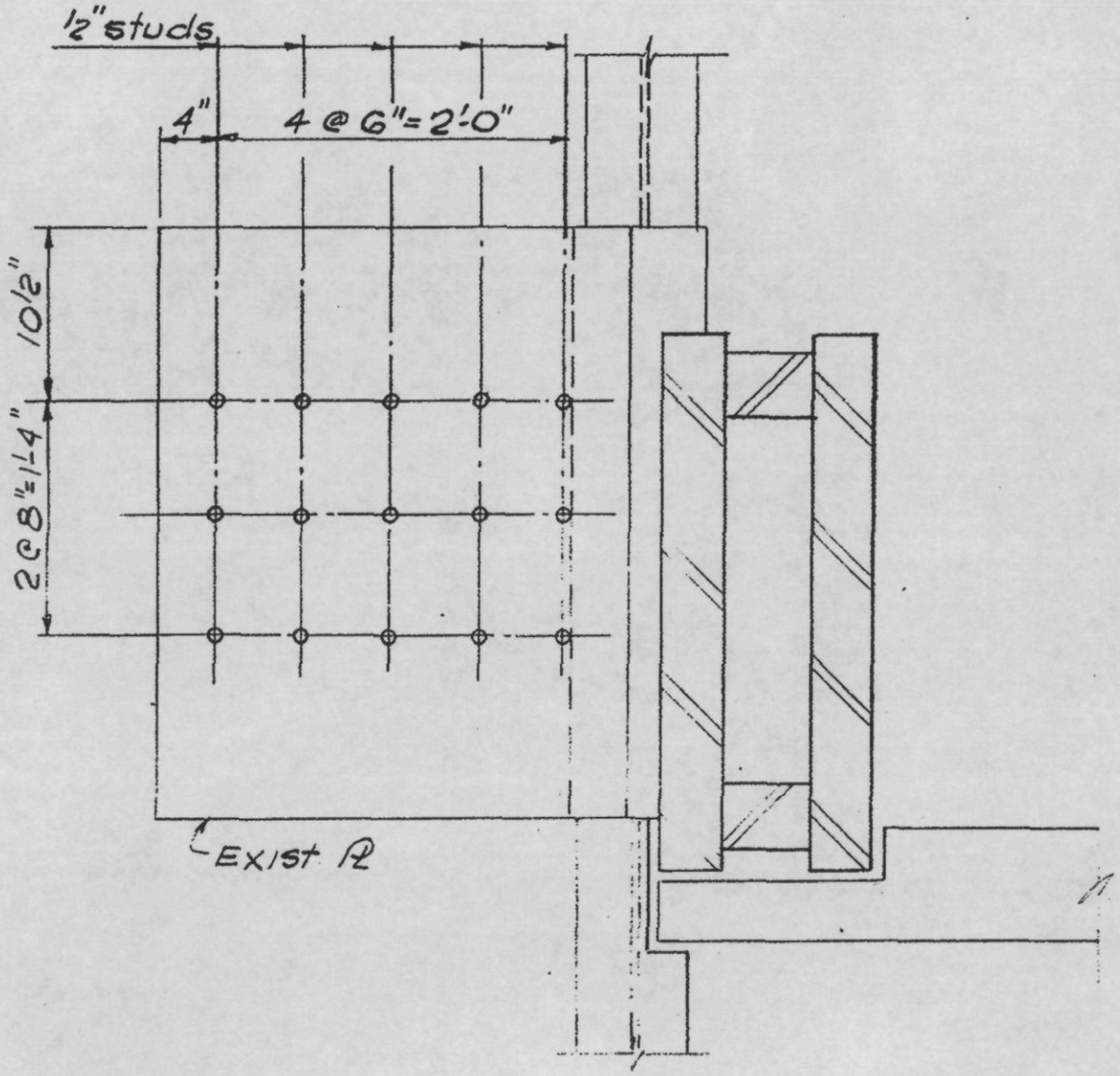

DETAIL 54A

DESIGNED
O'Neill
DRAWN
S. Wexler
REVIEWED

18-AB2-54L

SKILLING HELLE CHRISTIANSEN ROBERTSON — Structural & Civil Engineers

PROJECT THE WORLD TRADE CENTER | TITLE STRAP ANCHORS - CORE - DETAIL 54 | DATE 12-13-68

REVISIONS

20-69

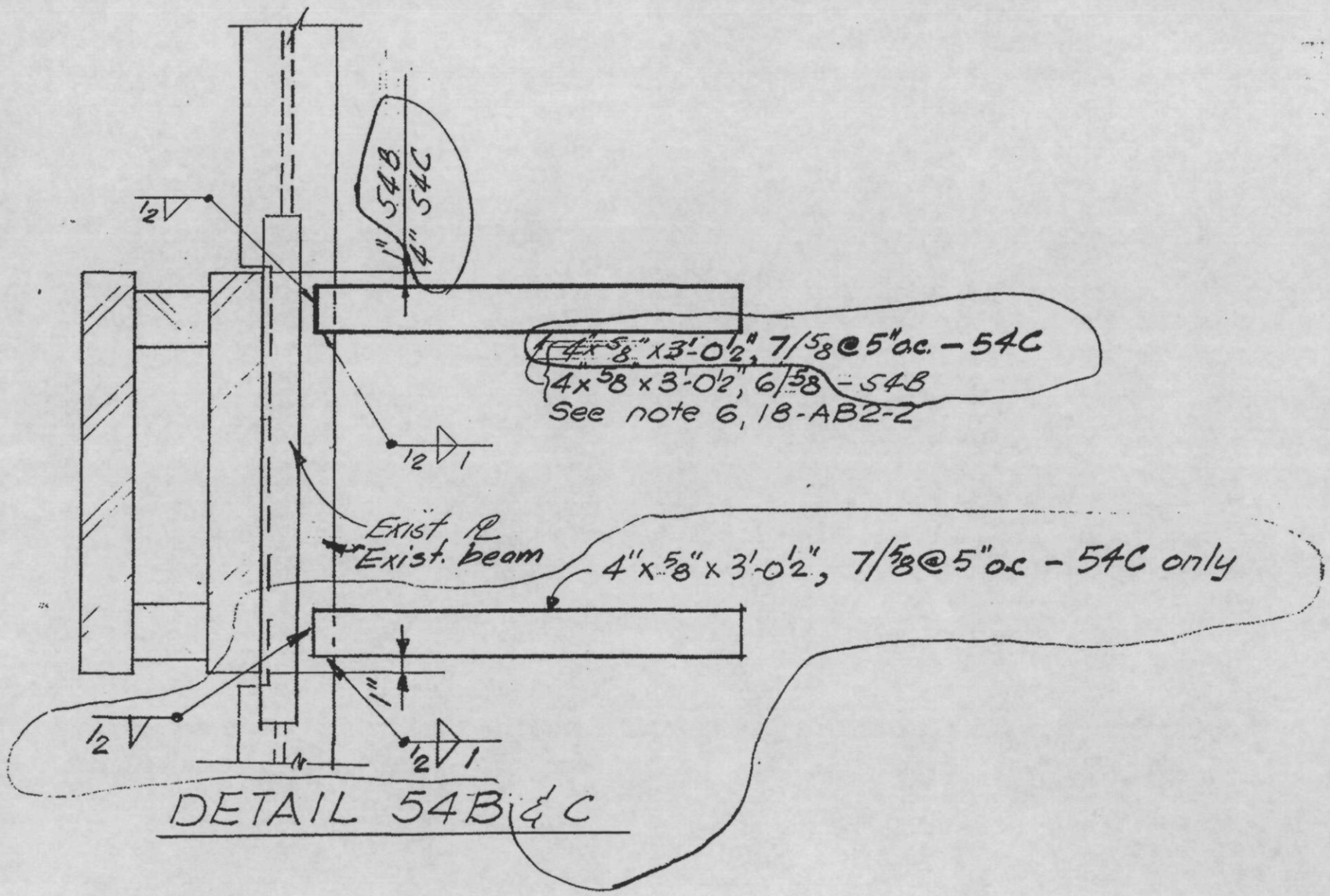

DETAIL 54B & C

LICENSED PROFESSIONAL ENGINEER
LESLIE E. ROBERTSON
No. 34360
UNIVERSITY OF THE STATE OF NEW YORK

DESIGNED L. Thiel

DRAWN S. Wexler

REVIEWED W. Brewer

18-AB2-54.2

SKILLING, HELLE, CHRISTIANSEN, ROBERTSON — Structural & Civil Engineers

PROJECT THE WORLD TRADE CENTER | TITLE STRAP ANCHORS - CORE - DETAIL 55 | DATE 12-13-68

REVISIONS

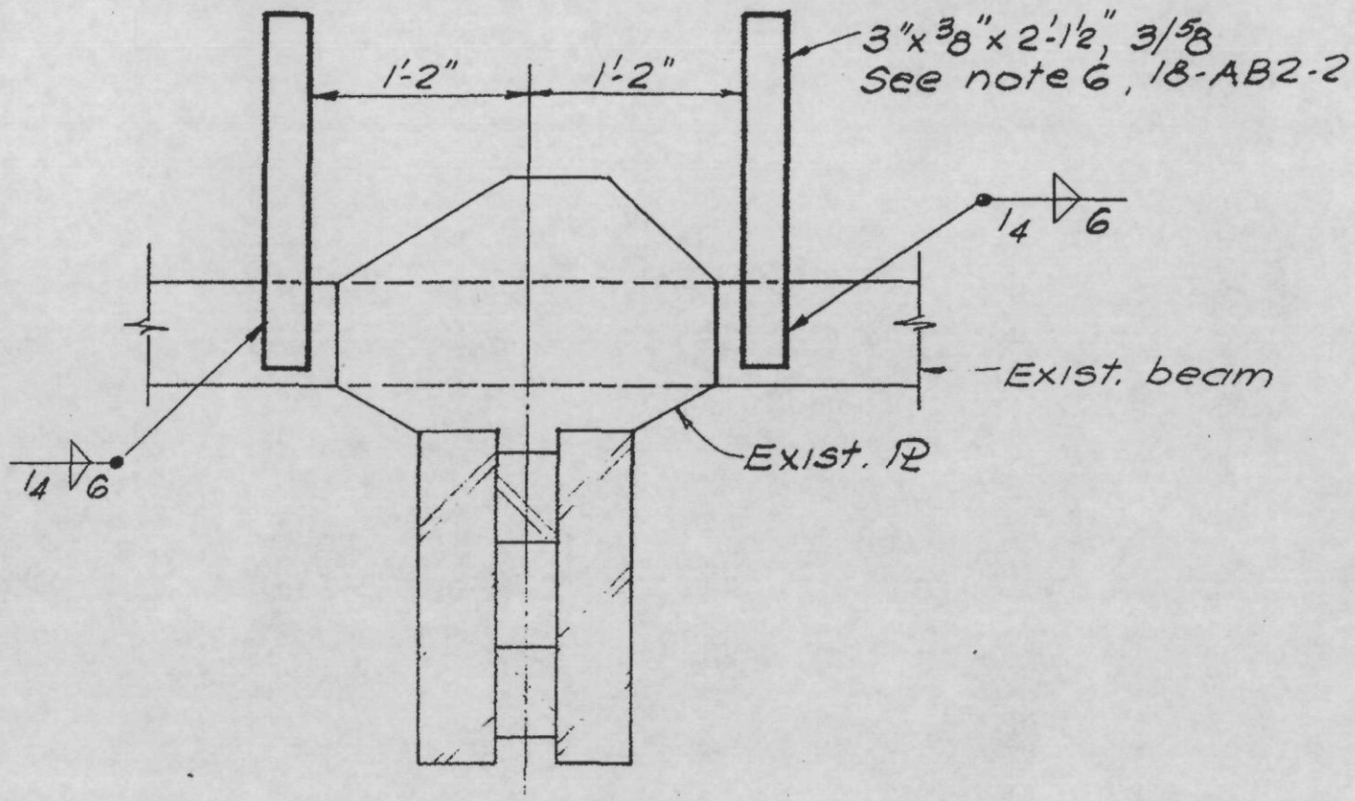

LICENSED PROFESSIONAL ENGINEER
LESLIE E. ROBERTSON
No. 34360
UNIVERSITY OF THE STATE OF NEW YORK

SIGNED
Neil
DRAWN
S Wexler
REVIEWED

18-AB2-55

SKILLING, HELLE, CHRISTIANSEN, ROBERTSON — Structural & Civil Engineers

PROJECT THE WORLD TRADE CENTER | TITLE STRAP ANCHORS -CORE - DETAIL 56 | DATE 12-13-68

REVISIONS

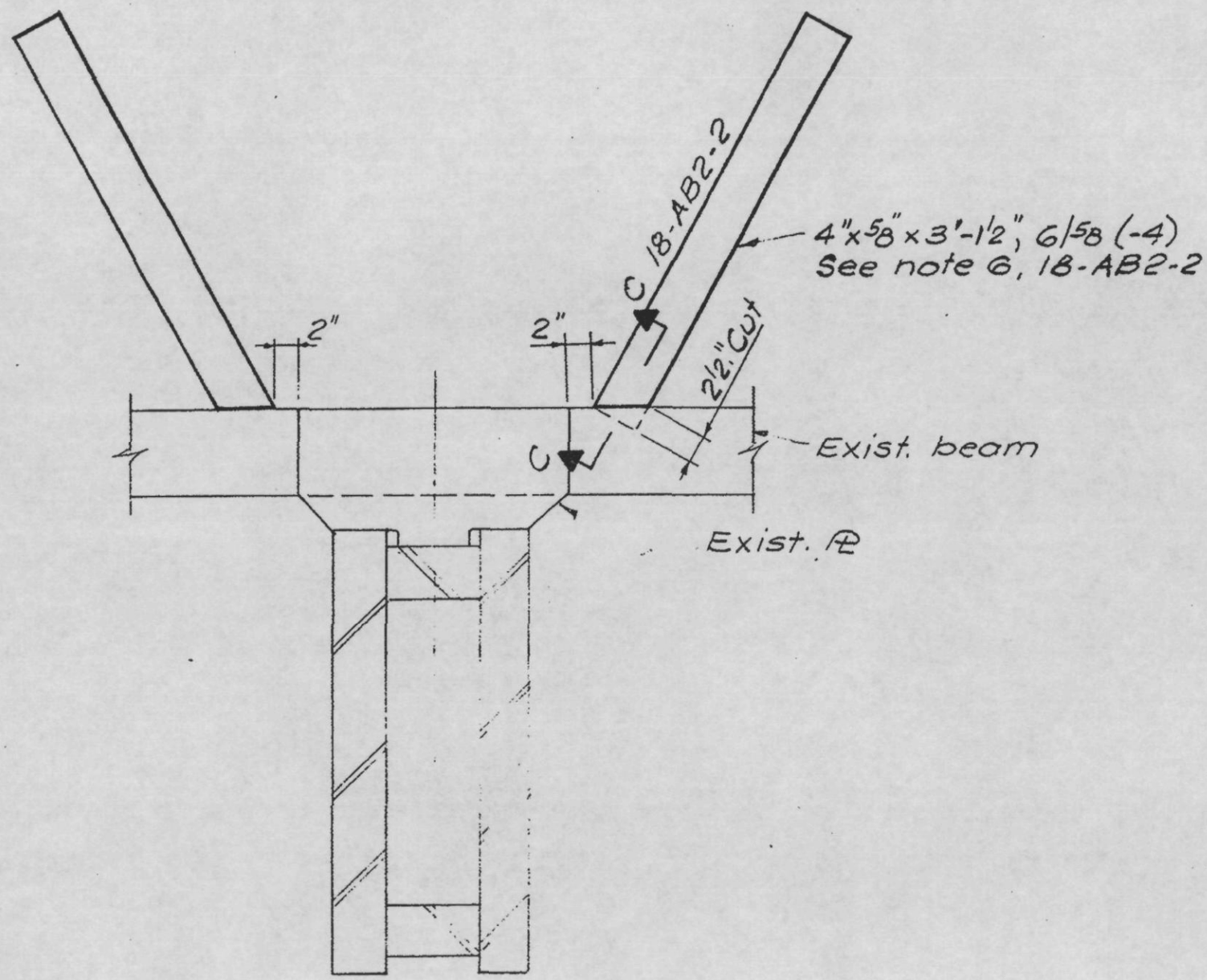

LICENSED PROFESSIONAL ENGINEER
LESLIE E. ROBERTSON
No. 34360
UNIVERSITY OF THE STATE OF NEW YORK

SIGNED
DRAWN
S Wexler
REVIEWED

18-AB2-56

SKILLING, HELLE, CHRISTIANSEN, ROBERTSON — Structural & Civil Engineers

PROJECT THE WORLD TRADE CENTER | TITLE STRAP ANCHORS - CORE - DETAIL 57 | DATE 12-13-68

REVISIONS

1 1-69

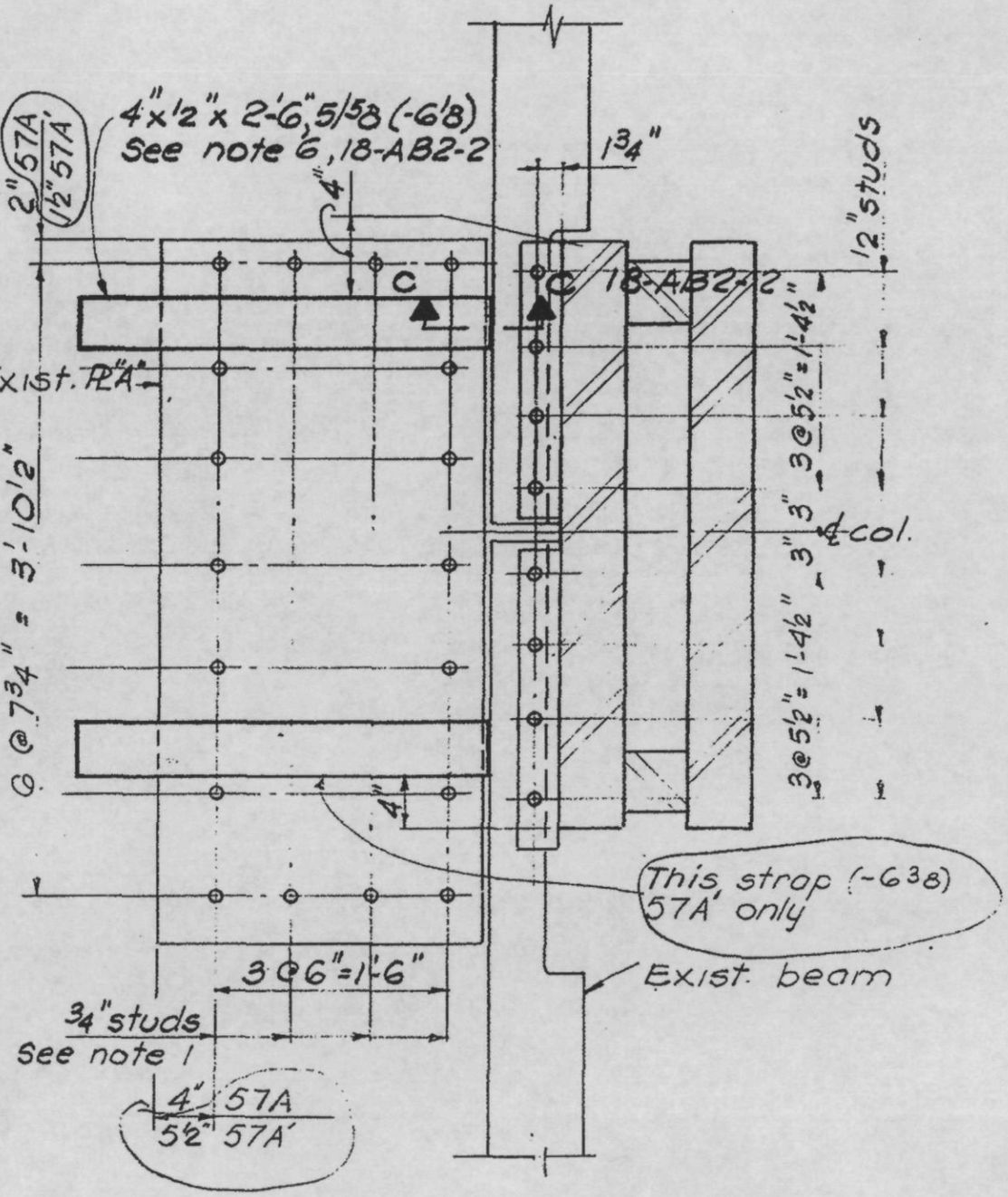

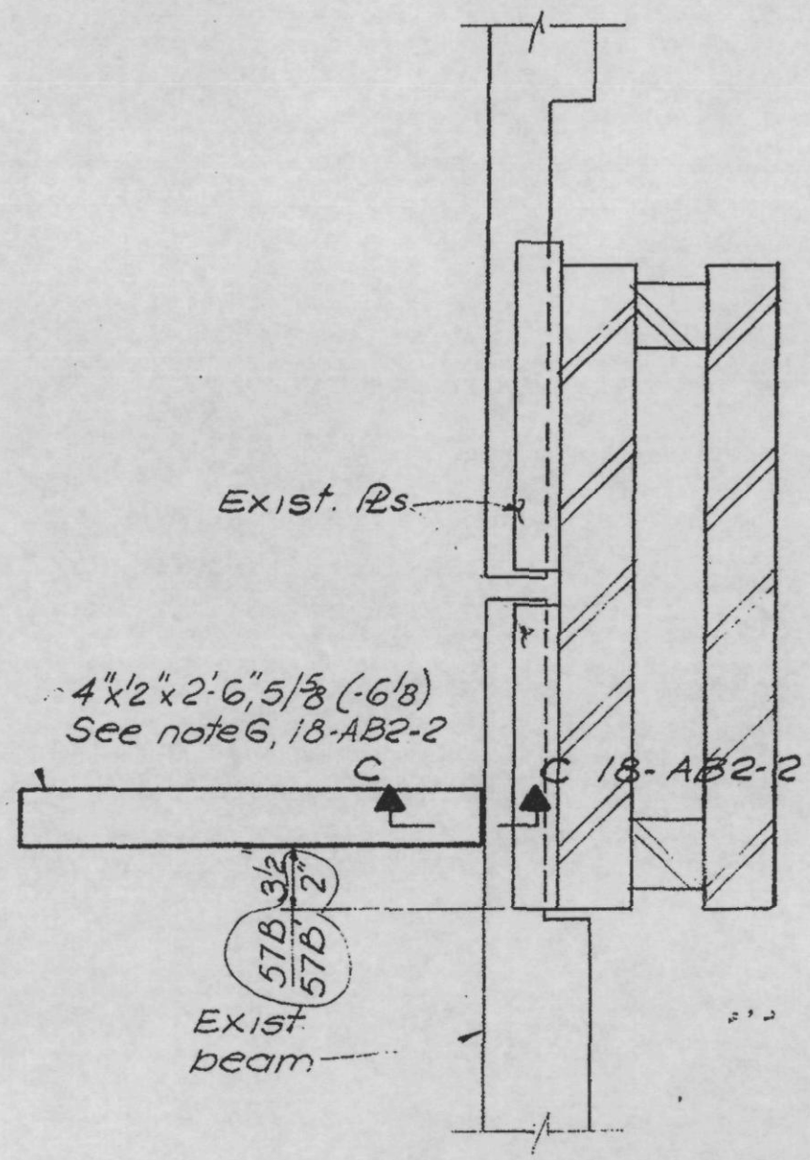

DETAIL 57A, 57A'

Note 1 - Studs to be placed on exist. R"A" prior to installation of straps

DETAIL 57B, 57B'

LICENSED PROFESSIONAL ENGINEER
LESLIE E. ROBERTSON
No. 34360
UNIVERSITY OF THE STATE OF NEW YORK

SIGNED
DRAWN S. Wexler
REVIEWED

18-AB2-57.1

SKILLING, HELLE, CHRISTIANSEN, ROBERTSON Structural & Civil Engineers

PROJECT THE WORLD TRADE CENTER | TITLE STRAP ANCHORS - CORE - DETAIL 57 | DATE 12-13-68

REVISIONS

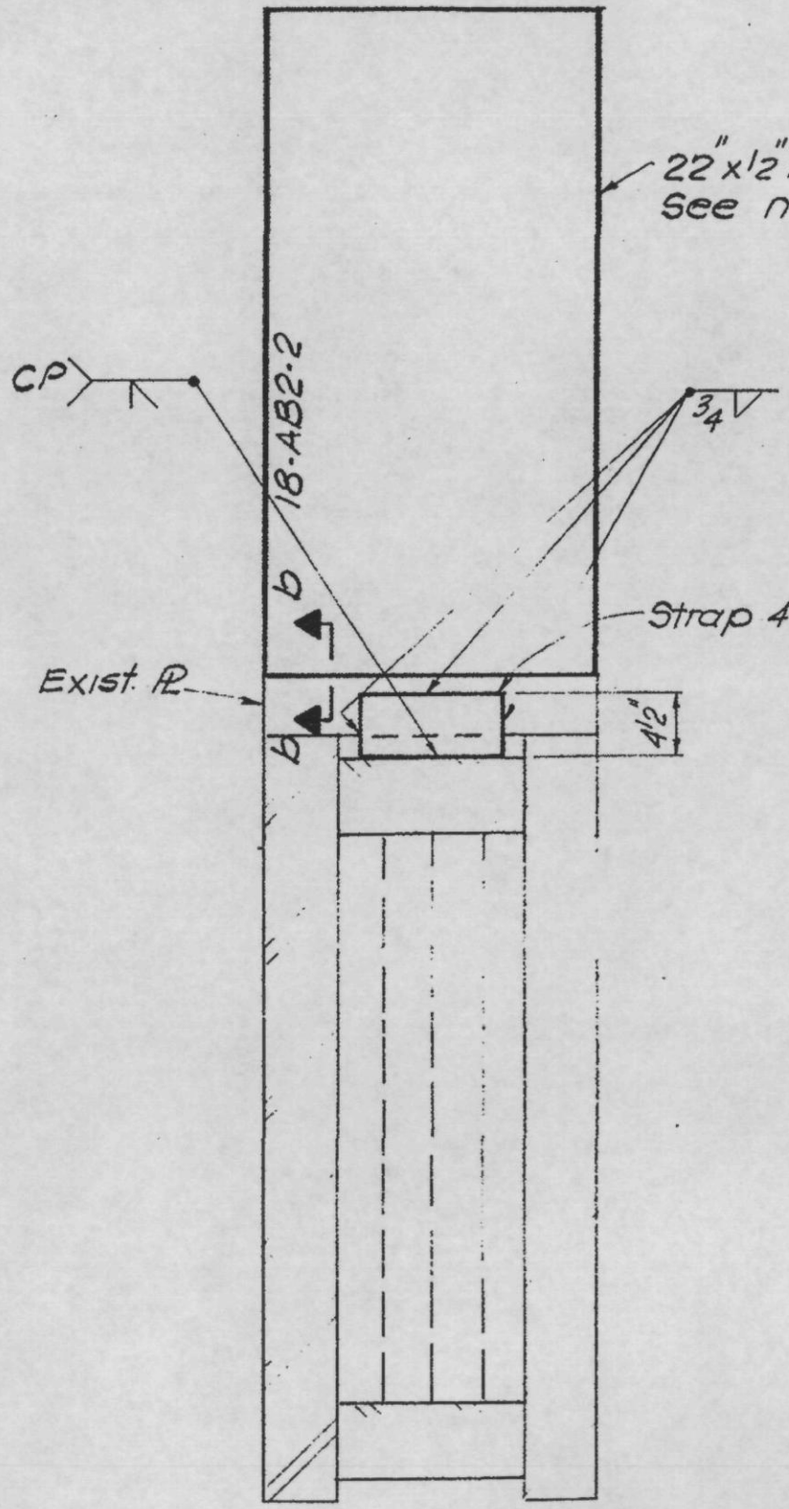

DETAIL 57C

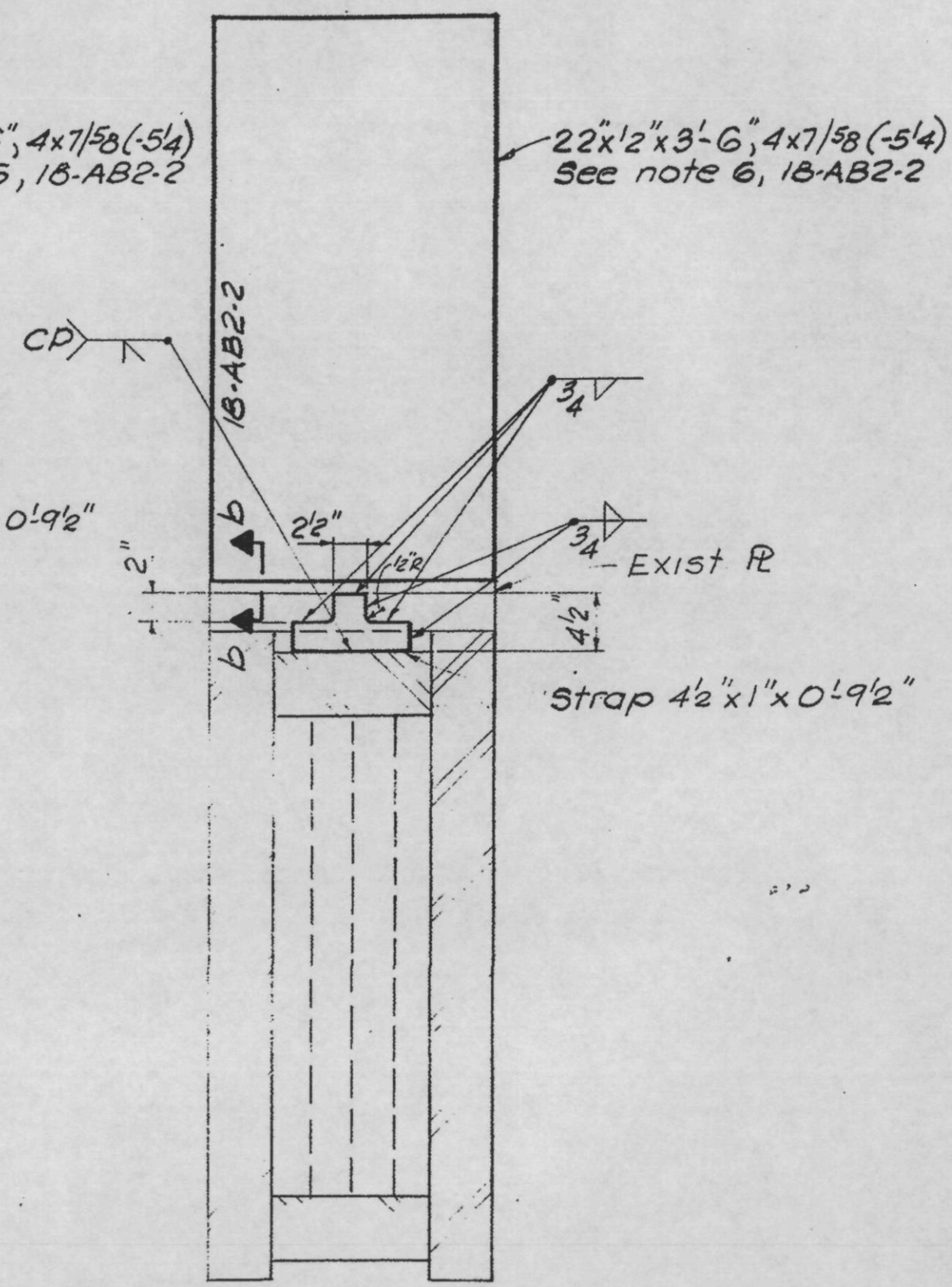

DETAIL 57D

LICENSED PROFESSIONAL ENGINEER
LESLIE E. ROBERTSON
No. 34360
UNIVERSITY OF THE STATE OF NEW YORK

DESIGNED O'Neil

DRAWN S. Wexler

REVIEWED

18-AB2-57.2

SKILLING, HELLE, CHRISTIANSEN, ROBERTSON — Structural & Civil Engineers

PROJECT THE WORLD TRADE CENTER | TITLE STRAP ANCHORS - CORE - DETAIL 57 | DATE 12-13-68

REVISIONS

1 1-69

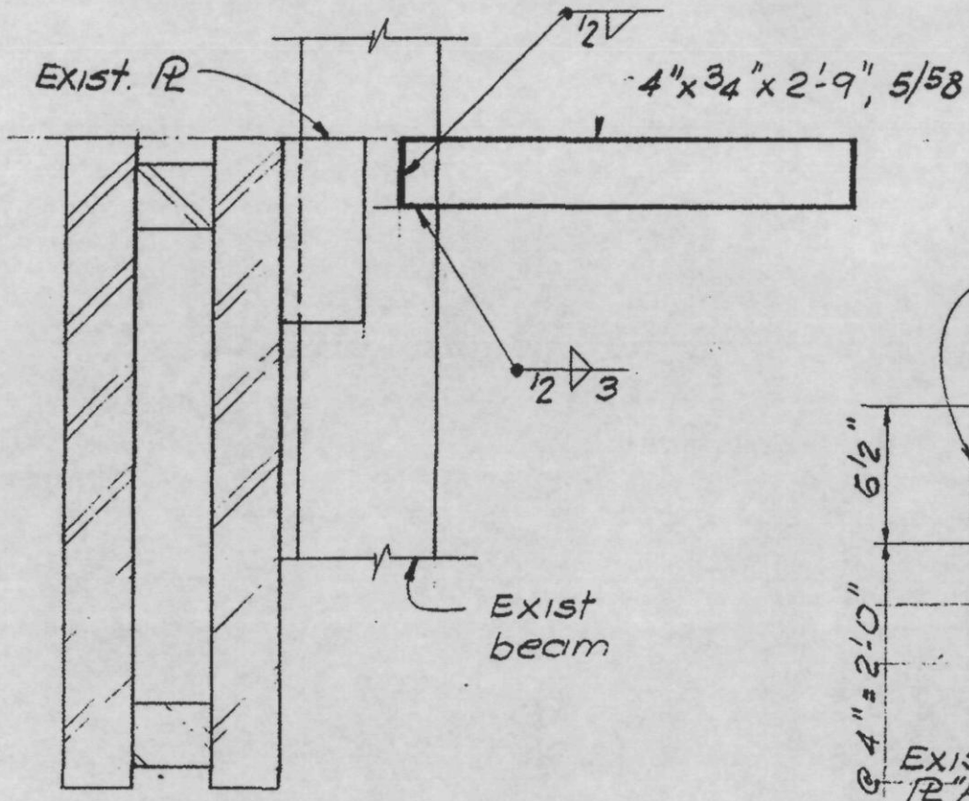

DETAIL 57E

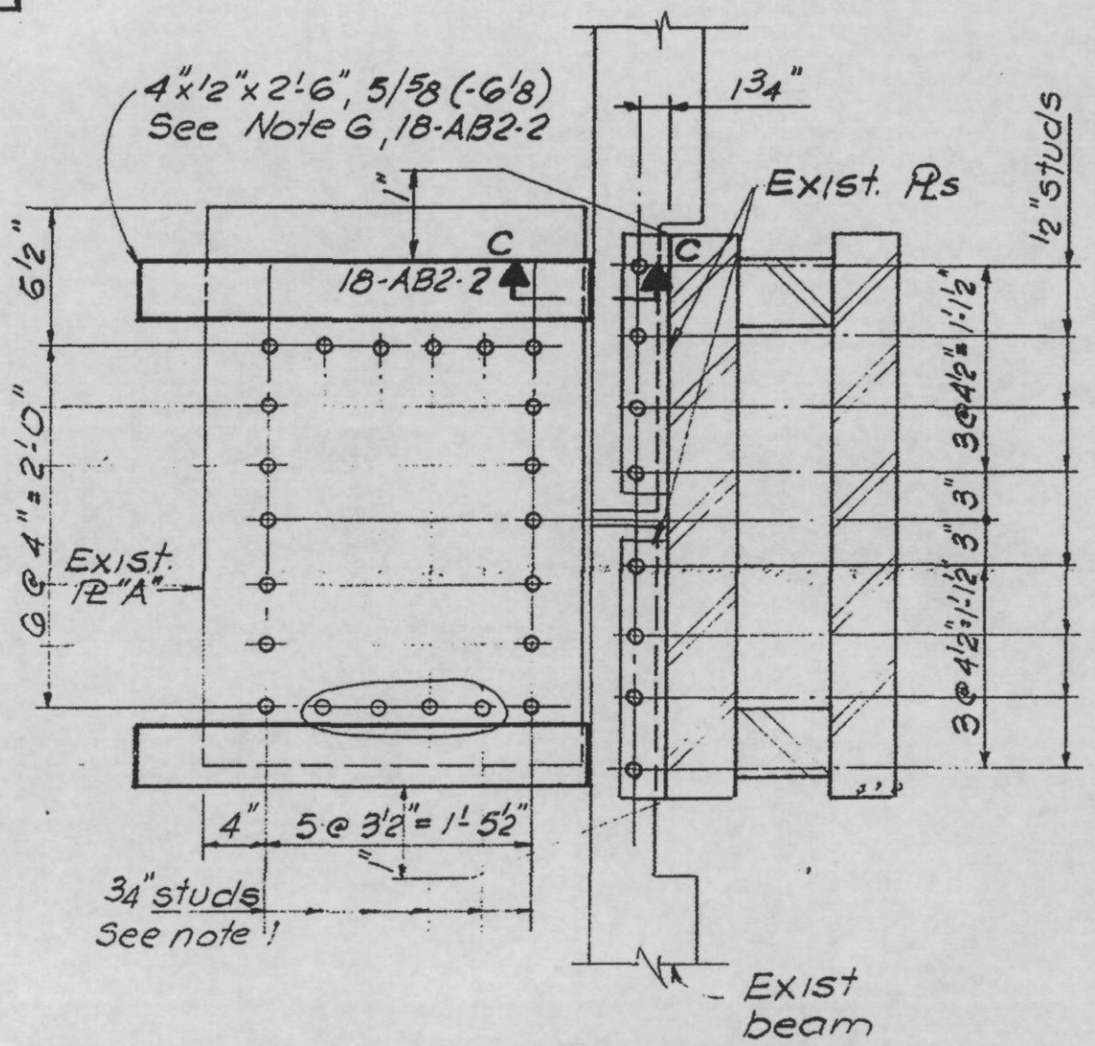

DETAIL 57F

Note 1 · Studs to be placed on exist. ℄ "A" prior to installation of straps.

LICENSED PROFESSIONAL ENGINEER
LESLIE E. ROBERTSON
No. 34360
UNIVERSITY OF THE STATE OF NEW YORK

DESIGNED
DRAWN S. Wexler
REVIEWED

18-AB2-57.3

SKILLING, HELLE, CHRISTIANSEN, ROBERTSON — Structural & Civil Engineers

PROJECT THE WORLD TRADE CENTER | TITLE STRAP ANCHORS-CORE - DETAIL 57 | DATE 12-13-68

REVISIONS

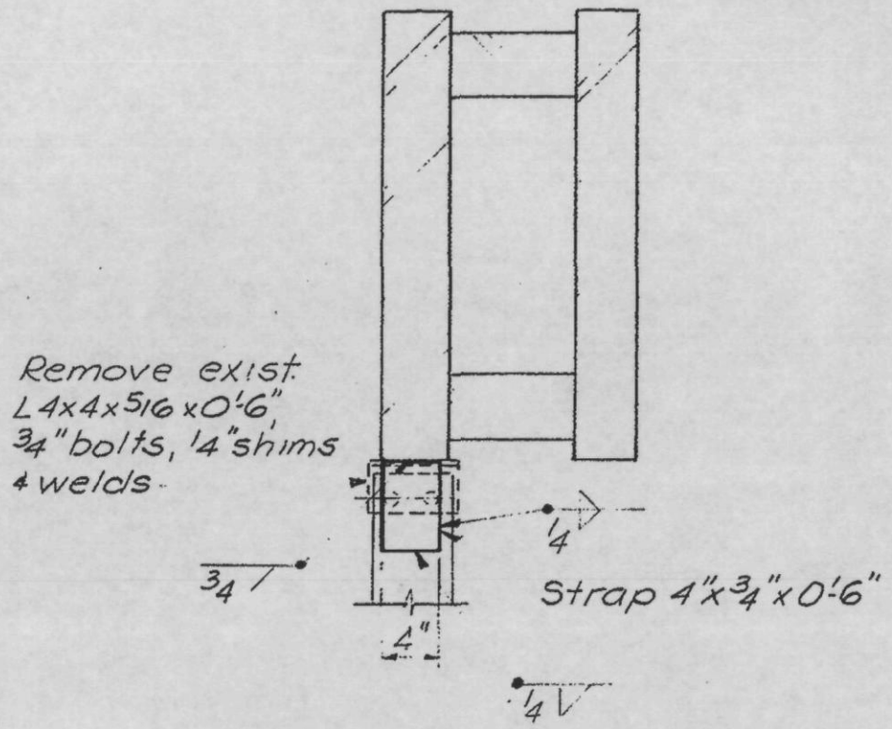

DETAIL 57G

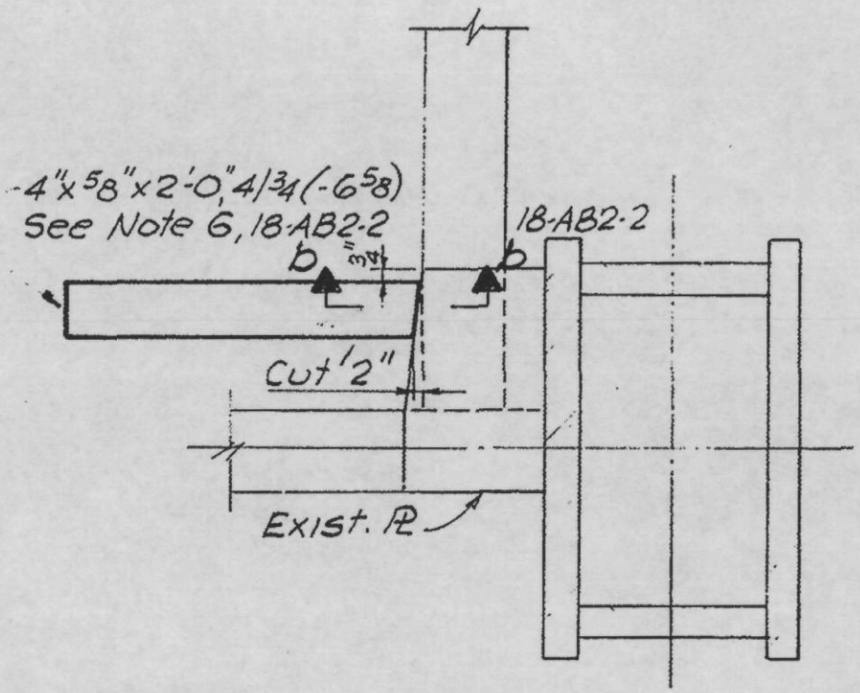

DETAIL 57H

LICENSED PROFESSIONAL ENGINEER
LESLIE E. ROBERTSON
No. 34360
UNIVERSITY OF THE STATE OF NEW YORK

DESIGNED T. O'Neil
DRAWN S. Wexler
REVIEWED

18-AB2-57.4

SKILLING, HELLE, CHRISTIANSEN, ROBERTSON — Structural & Civil Engineers

PROJECT THE WORLD TRADE CENTER | TITLE STRAP ANCHORS - CORE - DETAIL 58 | DATE 12-13-68

REVISIONS

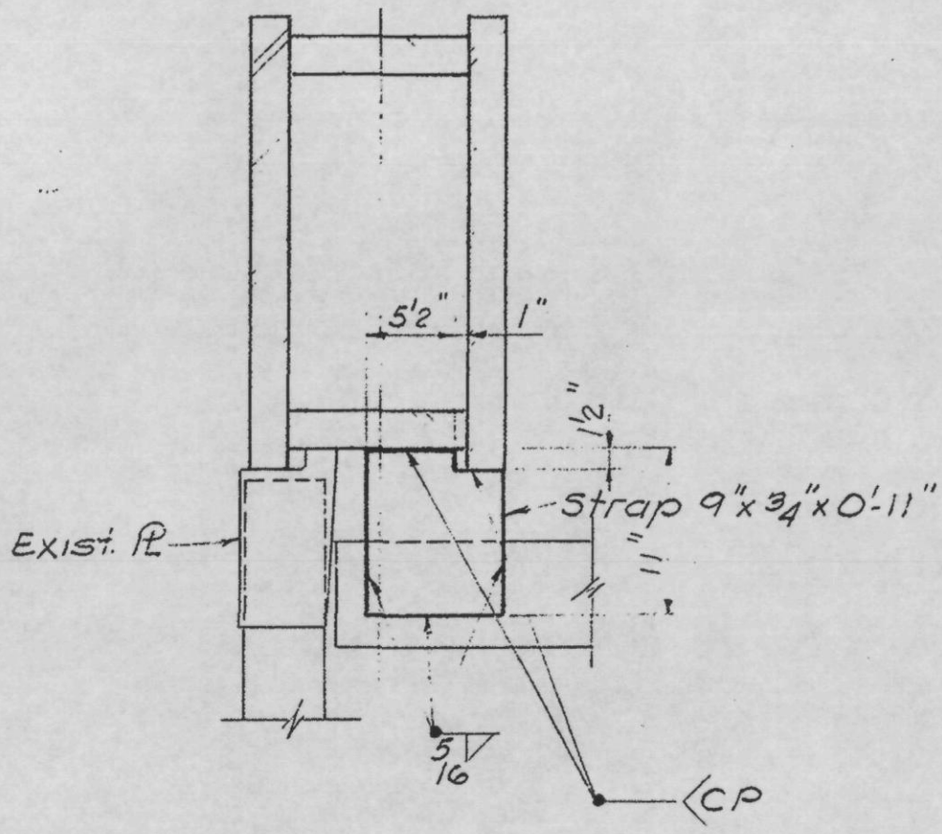

DETAIL 58A

LICENSED PROFESSIONAL ENGINEER
LESLIE E. ROBERTSON
No. 34360
UNIVERSITY OF THE STATE OF NEW YORK

DESIGNED L. O'Neill

DRAWN S. Wexler

REVIEWED

18-AB2-58

SKILLING, HELLE, CHRISTIANSEN, ROBERTSON — Structural & Civil Engineers

PROJECT: THE WORLD TRADE CENTER | TITLE: STRAP ANCHORS - CORE - DETAIL 59 | DATE: 2-7-69

REVISIONS

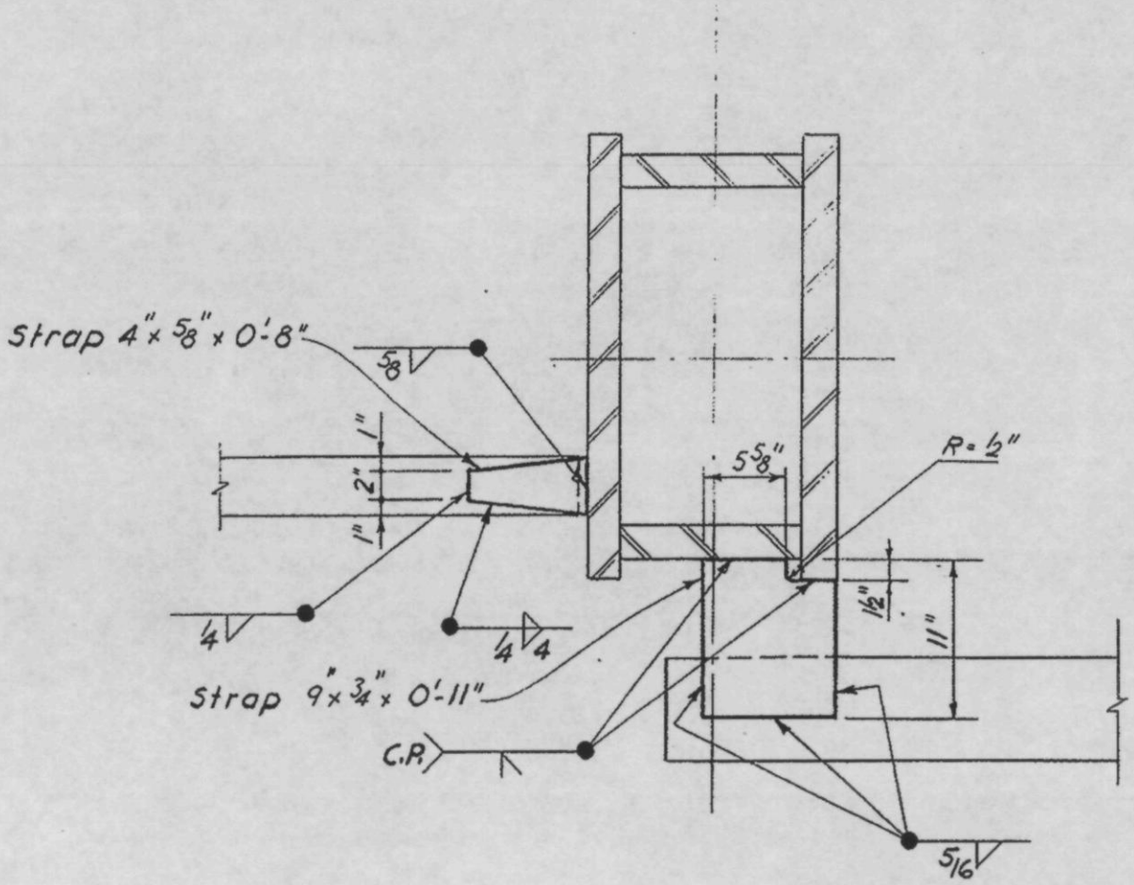

LICENSED PROFESSIONAL ENGINEER
LESLIE E. ROBERTSON
No. 34360
UNIVERSITY OF THE STATE OF NEW YORK

DESIGNED L. O'Neill
DRAWN F. Smith
REVIEWED W. Brewer

18-AB2-59

SKILLING, HELLE, CHRISTIANSEN, ROBERTSON — Structural & Civil Engineers

PROJECT: THE WORLD TRADE CENTER | TITLE: STRAP ANCHOR - CORE - DETAIL 60 | DATE: 2-7-69

REVISIONS

4-30-69

Detail No	Strap #1 — Studs		Strap #2
60	3" x 3/4" x 2'-1 1/2"	4/5/8	13" x 3/4" x 1'-3"
60A	3" x 3/8" x 1'-7 1/2"	3/5/8	15" x 3/4" x 1'-4"

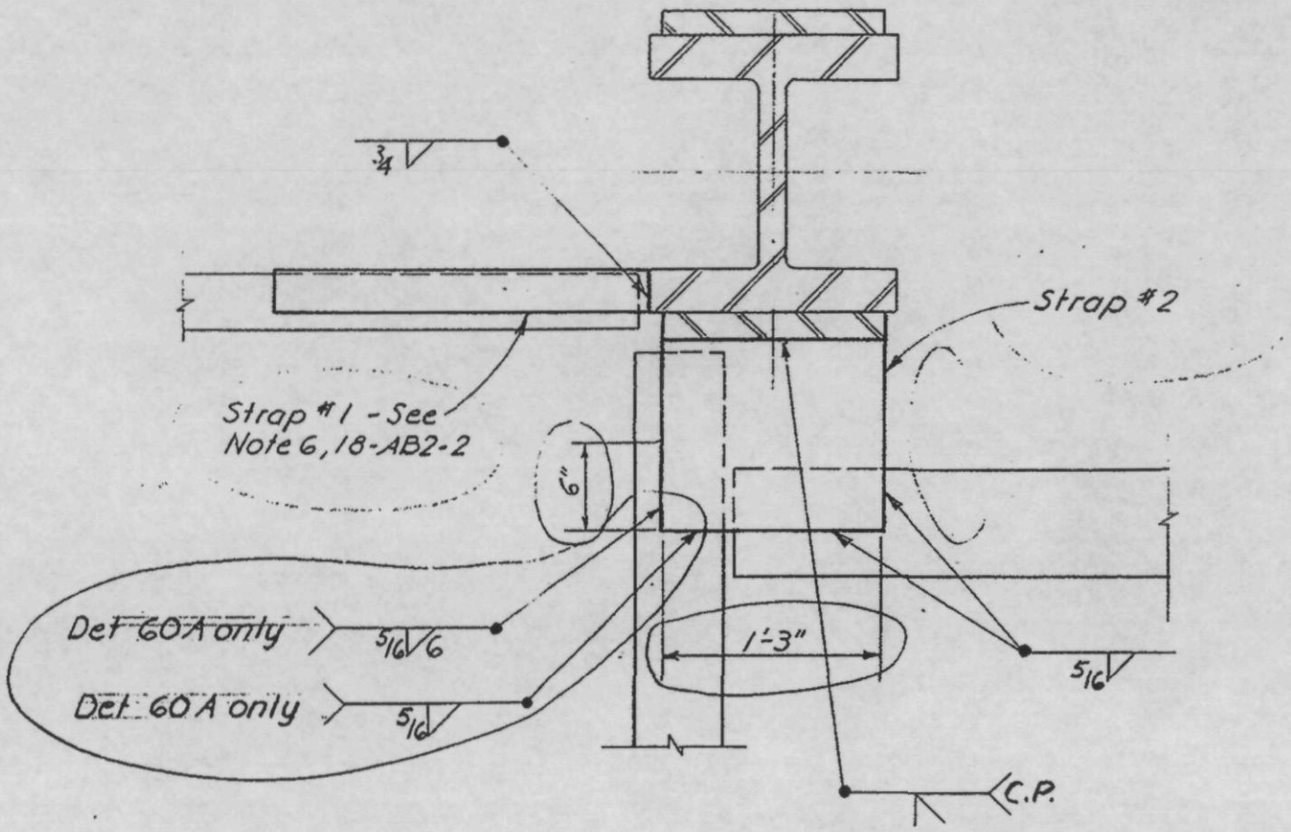

LICENSED PROFESSIONAL ENGINEER
LESLIE E. ROBERTSON
No. 34360
UNIVERSITY OF THE STATE OF NEW YORK

66

DESIGNED: L. O'Neill

DRAWN: F. Smith

REVIEWED: W. Brewer

18-AB2-60

SKILLING, HELLE, CHRISTIANSEN, ROBERTSON — Structural & Civil Engineers

PROJECT THE WORLD TRADE CENTER | TITLE STRAP ANCHOR - CORE - DETAIL 61 | DATE 4/30/69

REVISIONS

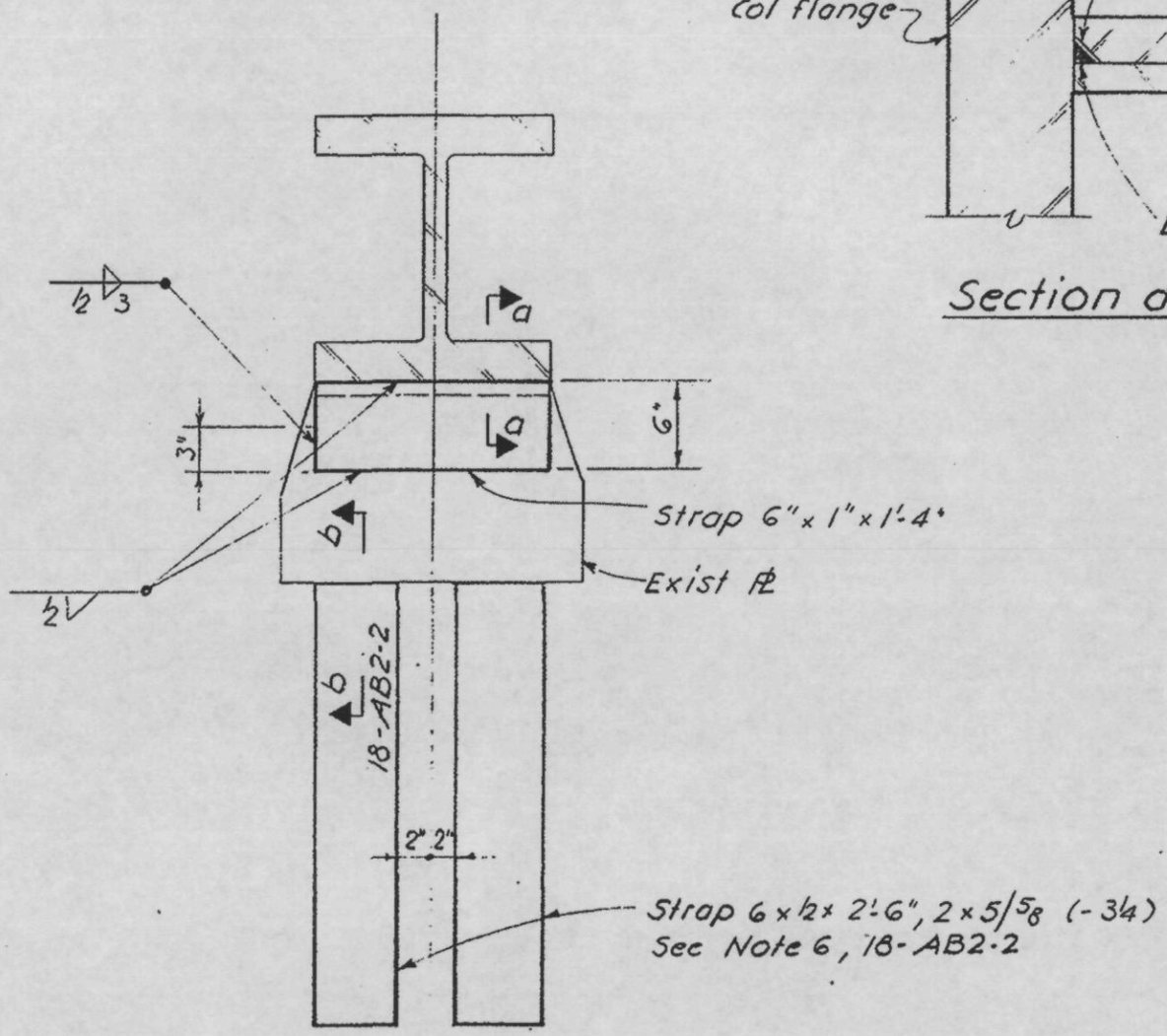

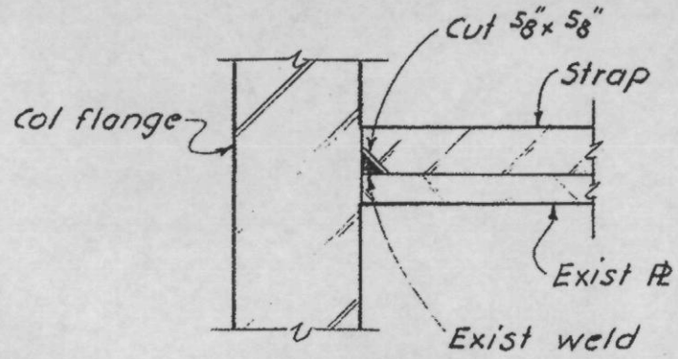

Section a-a

LICENSED PROFESSIONAL ENGINEER
LESLIE E. ROBERTSON
No. 34360
UNIVERSITY OF THE STATE OF NEW YORK

L7
DESIGNED

DRAWN
F. Smith

REVIEWED
W. Brewer

18-AB2-61

SKILLING, HELLE, CHRISTIANSEN, ROBERTSON — Structural & Civil Engineers

PROJECT THE WORLD TRADE CENTER | TITLE STRAP ANCHORS - CORE - DETAIL 62 | DATE 4/30/69

REVISIONS

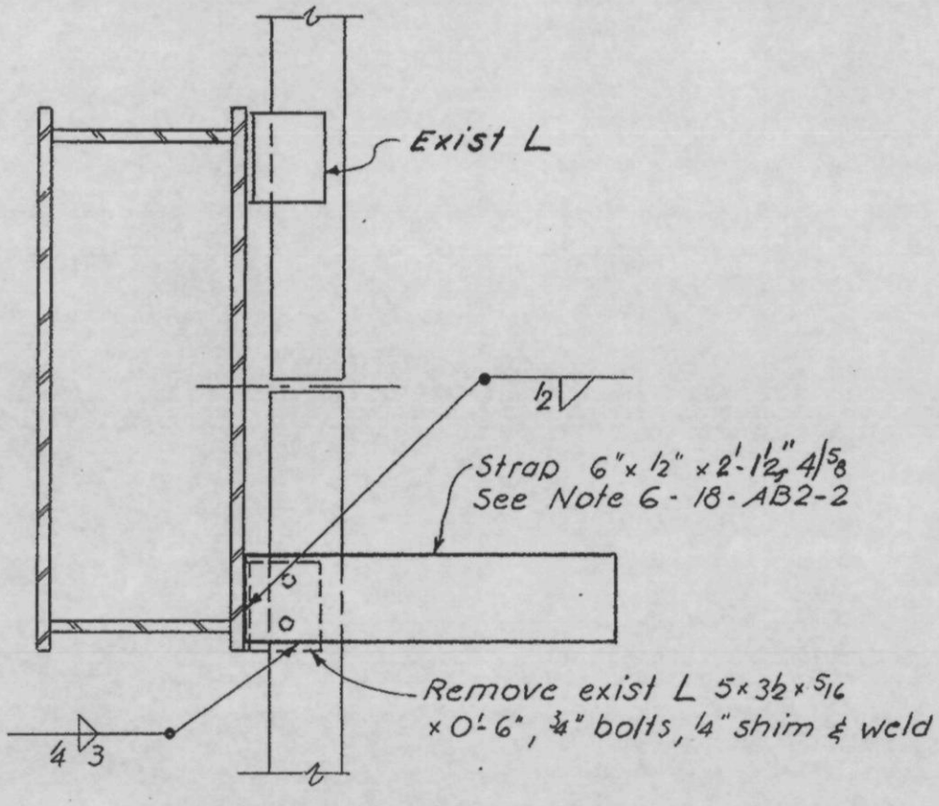

DETAIL 62A

DETAIL 62B

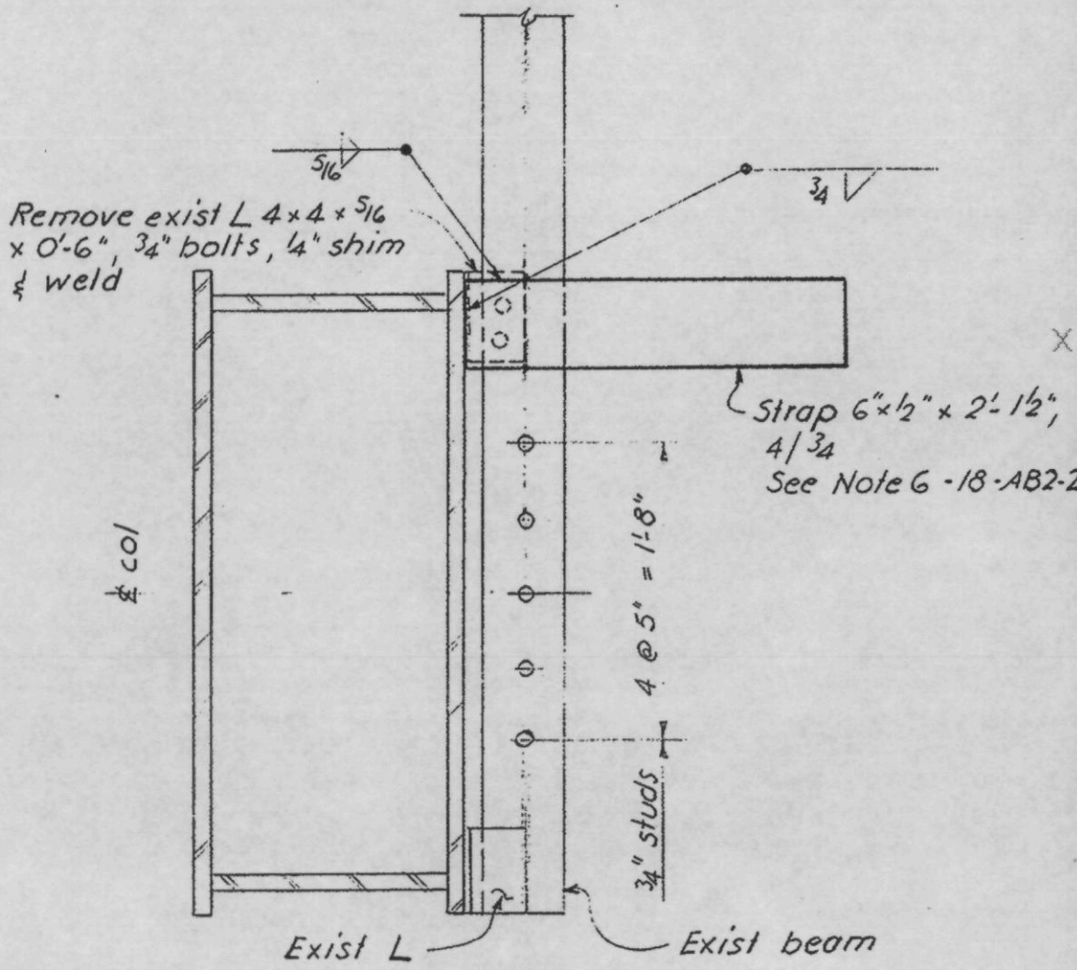

DETAIL 62C

LICENSED PROFESSIONAL ENGINEER
LESLIE E. ROBERTSON
No. 34360
UNIVERSITY OF THE STATE OF NEW YORK

68
DESIGNED

DRAWN F. Smith

REVIEWED W. Brewer

18-AB2-62.1

SKILLING, HELLE, CHRISTIANSEN, ROBERTSON — Structural & Civil Engineers

PROJECT: THE WORLD TRADE CENTER | TITLE: STRAP ANCHORS - DETAIL 62 | DATE: 4/30/69

REVISIONS

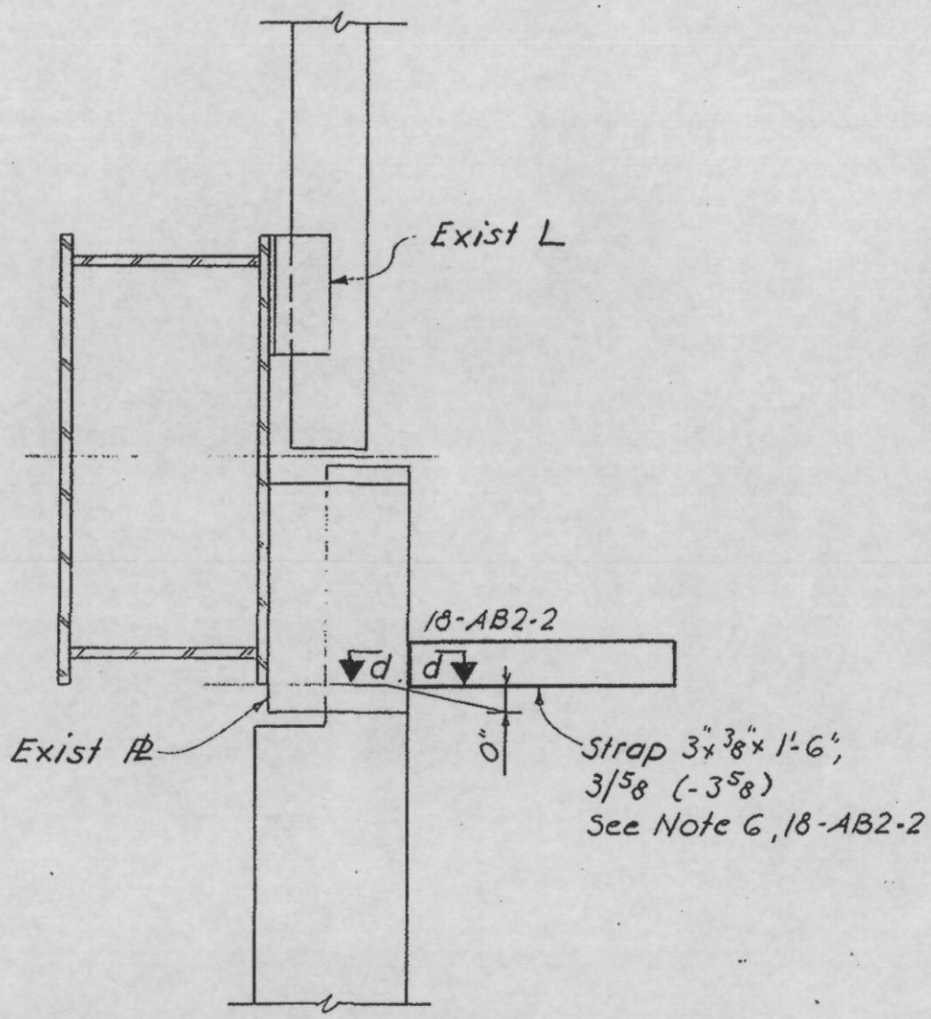

DETAIL 62D

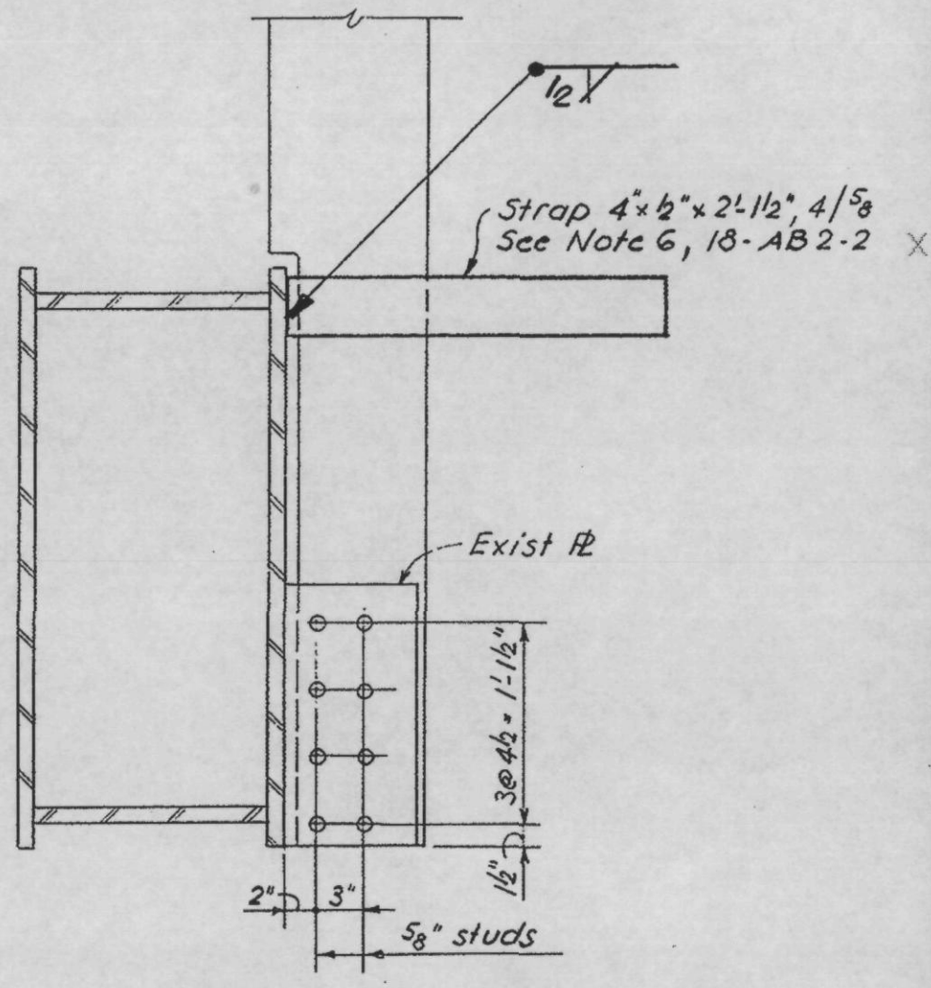

DETAIL 62E.

LICENSED PROFESSIONAL ENGINEER — LESLIE E. ROBERTSON — No. 34360 — UNIVERSITY OF THE STATE OF NEW YORK

LG — DESIGNED

DRAWN: F. Smith

REVIEWED: W. Brewer

18-AB.2-62.2

SKILLING, HELLE, CHRISTIANSEN, ROBERTSON — Structural & Civil Engineers

PROJECT THE WORLD TRADE CENTER | TITLE STRAP ANCHOR - CORE - DETAIL 63 | DATE 4/30/69

REVISIONS

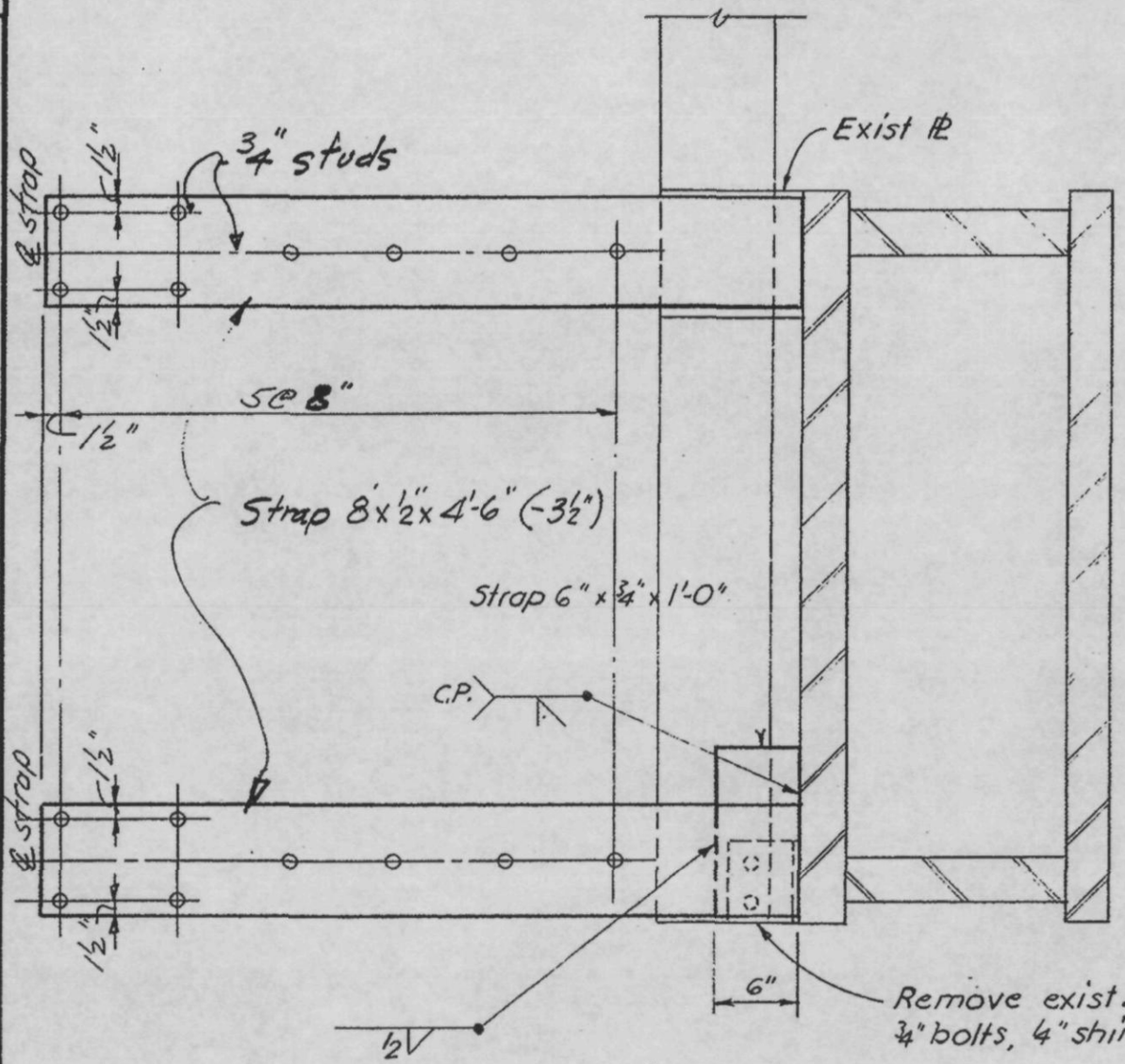

DETAIL 63A

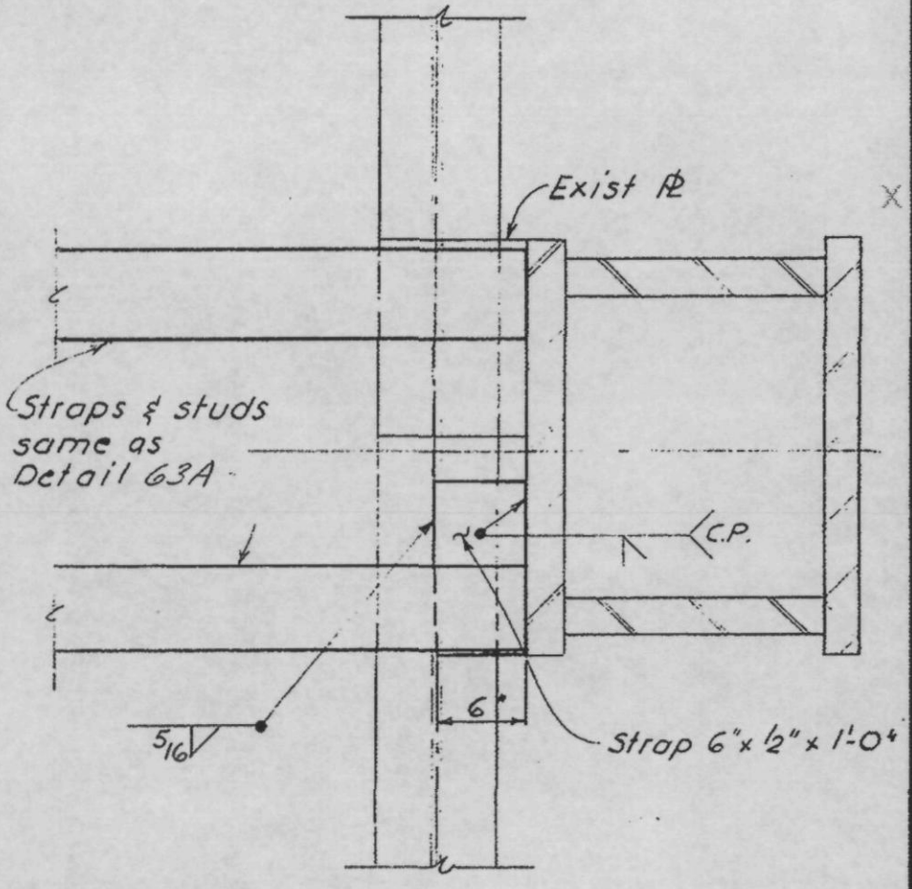

DETAIL 63B

LICENSED PROFESSIONAL ENGINEER
LESLIE E. ROBERTSON
No. 34360
UNIVERSITY OF THE STATE OF NEW YORK

TD
DESIGNED

DRAWN
F. Smith

REVIEWED
W. Brewer

18-AB2-63

SKILLING, HELLE, CHRISTIANSEN, ROBERTSON — Structural & Civil Engineers

PROJECT THE WORLD TRADE CENTER | TITLE STRAP ANCHOR - CORE - DETAIL 64 | DATE 4/30/69

REVISIONS

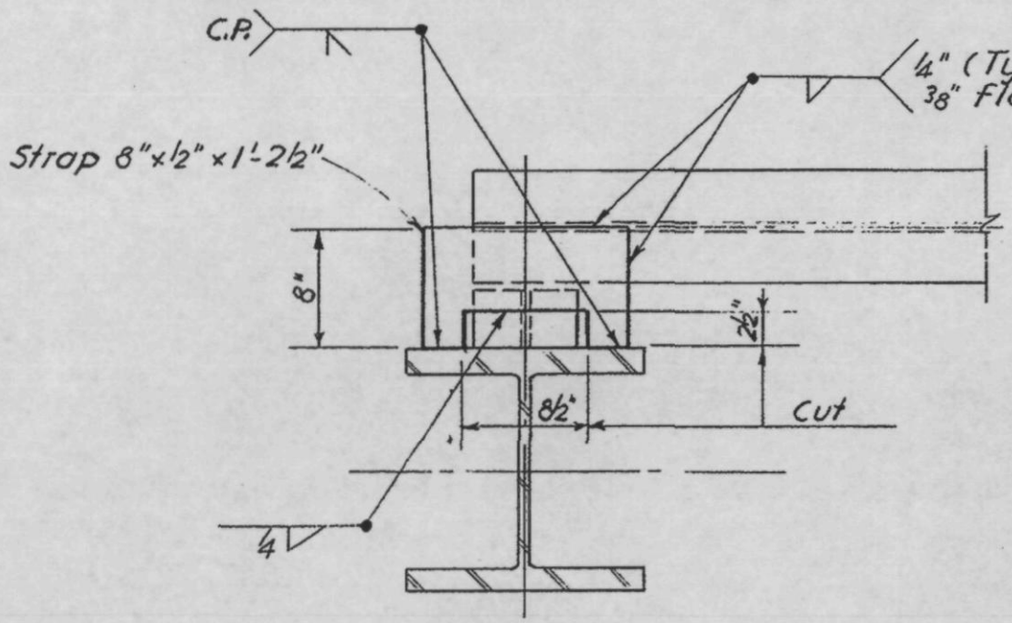

DETAIL 64A

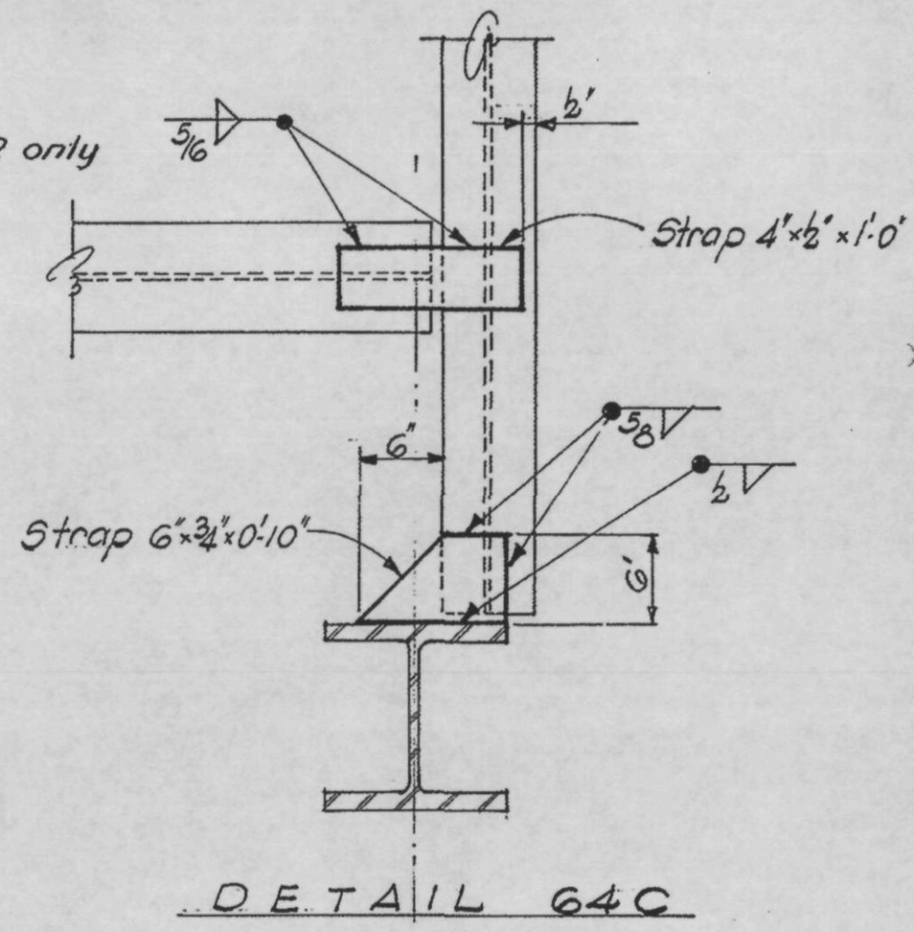

DETAIL 64C

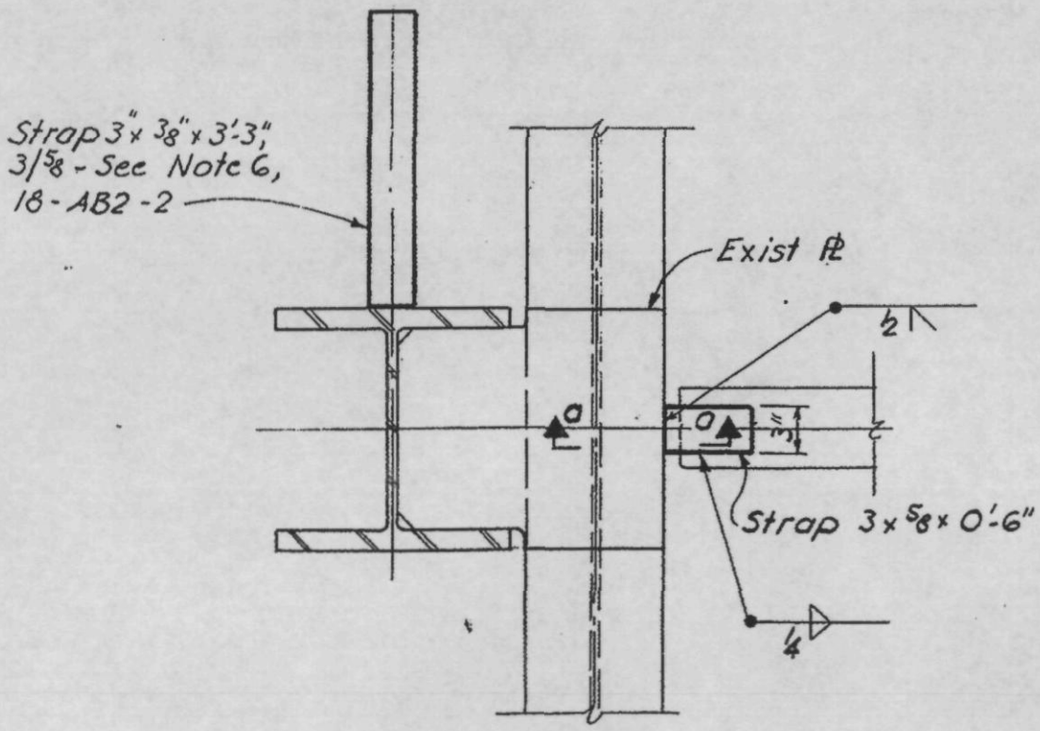

DETAIL 64B

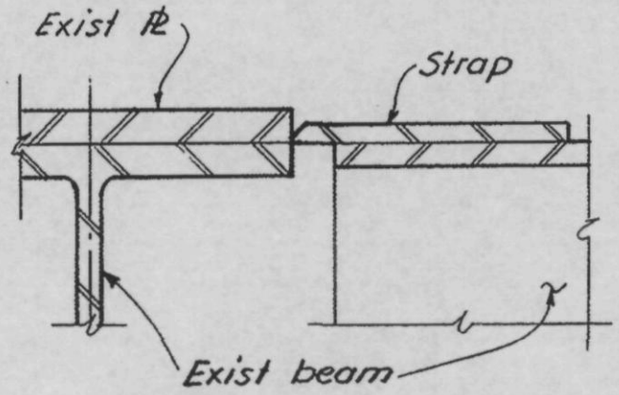

Section a-a

LICENSED PROFESSIONAL ENGINEER
LESLIE E. ROBERTSON
No. 34360
UNIVERSITY OF THE STATE OF NEW YORK

DESIGNED

DRAWN F. Smith

REVIEWED W. Brewer

18-AB2-64.1

SKILLING, HELLE, CHRISTIANSEN, ROBERTSON — Structural & Civil Engineers

PROJECT THE WORLD TRADE CENTER | TITLE STRAP ANCHOR CORE DETAIL 64 | DATE 4/30/69

REVISIONS

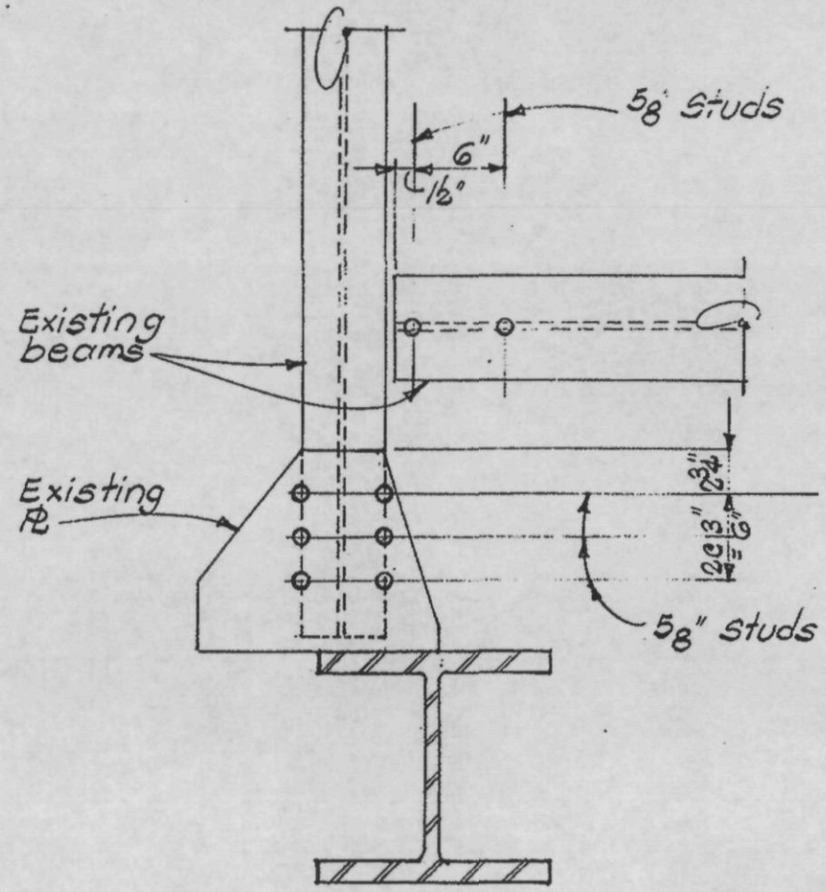

SECTION 64D

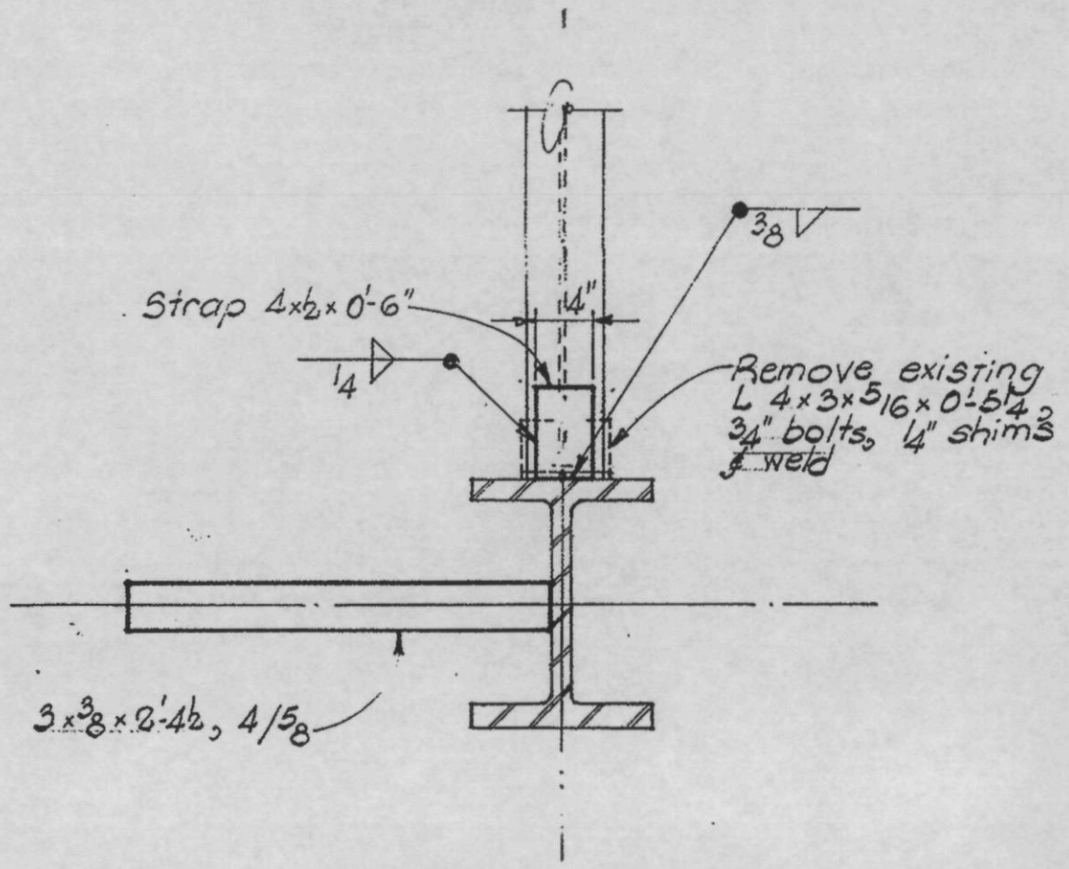

SECTION 64E

LICENSED PROFESSIONAL ENGINEER
LESLIE E. ROBERTSON
No. 34360
UNIVERSITY OF THE STATE OF NEW YORK

2

DESIGNED

DRAWN S.T.M.

REVIEWED W. Brewer

18-AB2-64.2

SKILLING, HELLE, CHRISTIANSEN, ROBERTSON — Structural & Civil Engineers

PROJECT THE WORLD TRADE CENTER | TITLE STRAP ANCHOR CORE DETAIL 65 | DATE 4-30-69

REVISIONS

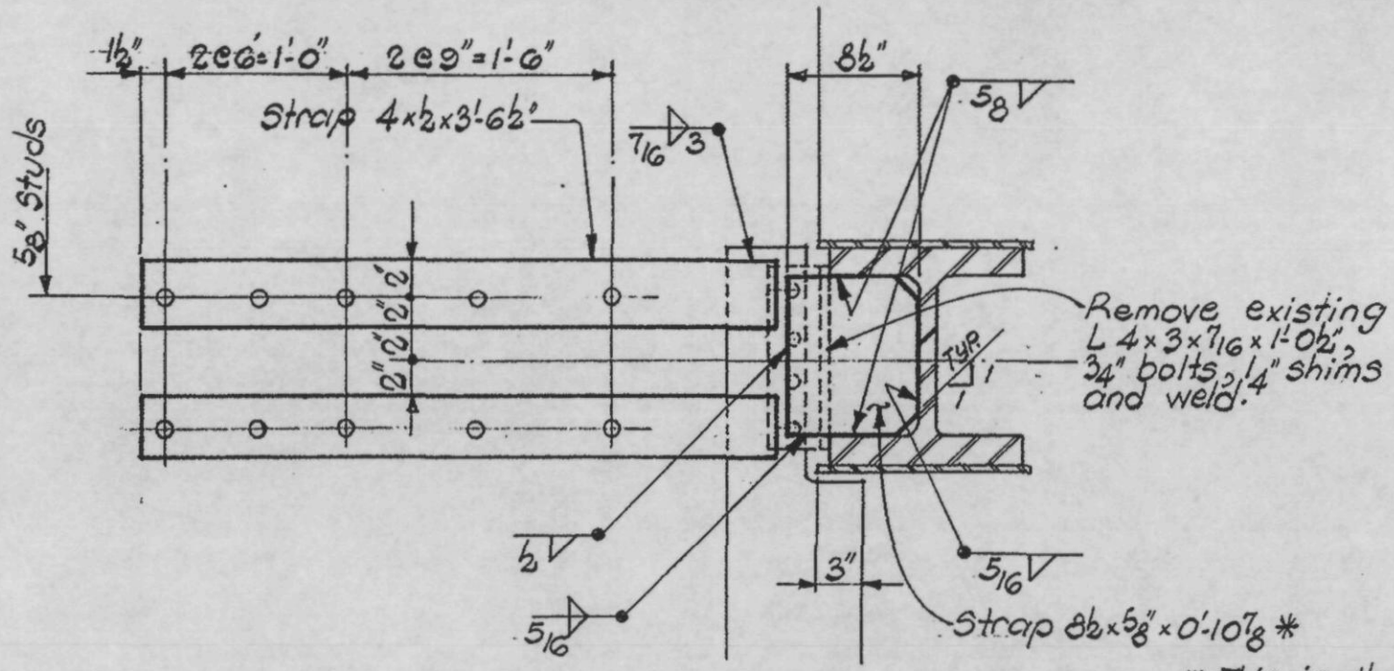

DETAIL 65A

* This is the theoretical dimension. Cut in the field from 8½"×5/8×1'-0" Maximum gap permitted between strap and column flange is 3/16"

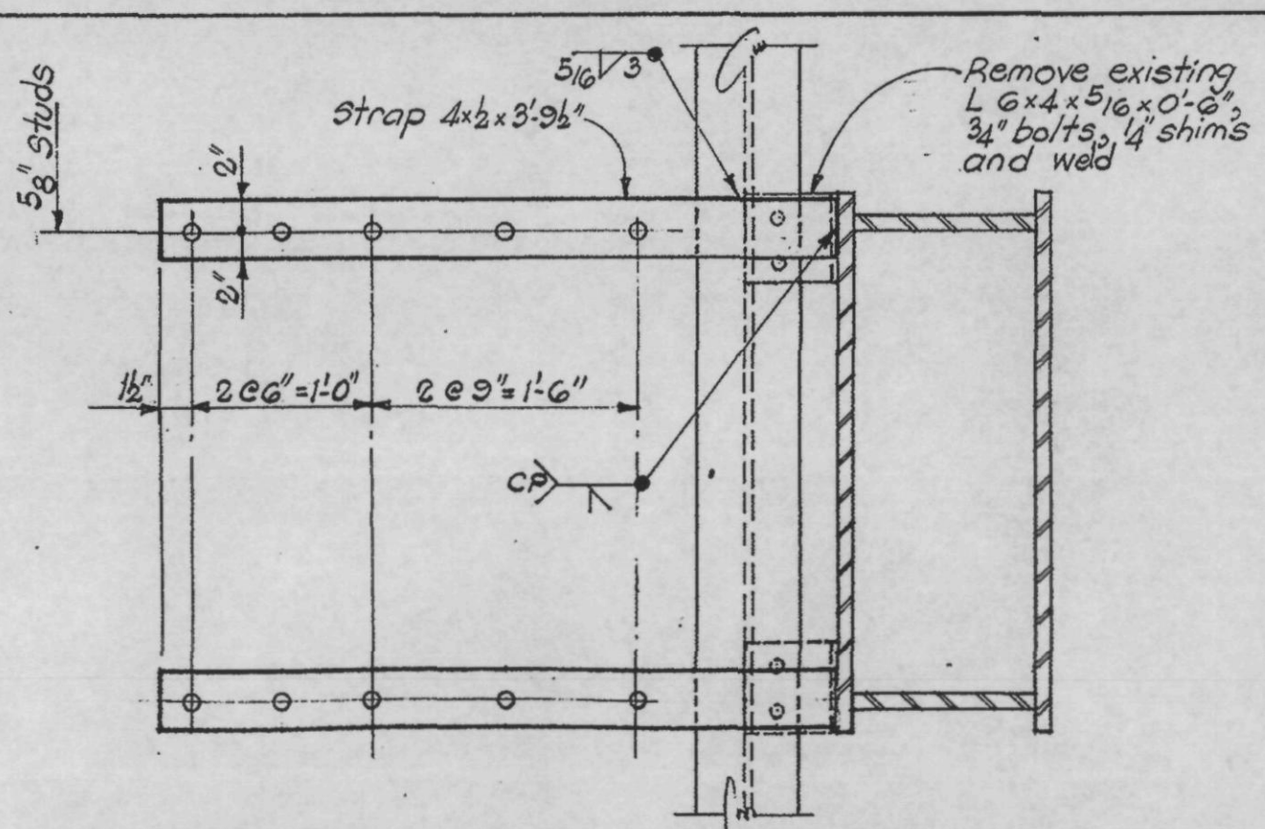

DETAIL 65B

LICENSED PROFESSIONAL ENGINEER
LESLIE E. ROBERTSON
No. 34960
UNIVERSITY OF THE STATE OF NEW YORK

73
DESIGNED

DRAWN
S.T.M.

REVIEWED
W. Brewer

18-AB2-65

SKILLING, HELLE, CHRISTIANSEN, ROBERTSON — Structural & Civil Engineers

PROJECT THE WORLD TRADE CENTER | TITLE STRAP ANCHOR CORE DETAIL 66 | DATE 4-30-69

REVISIONS

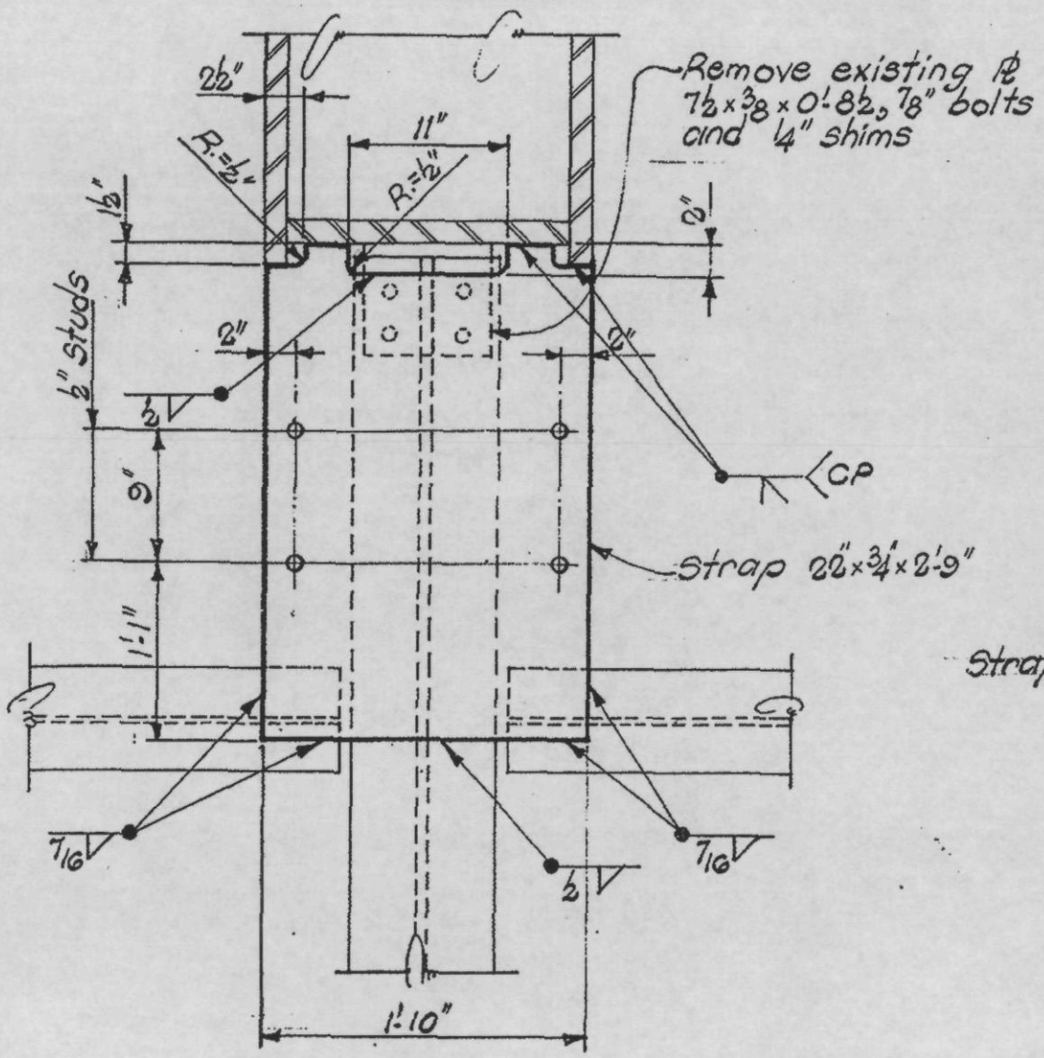

DETAIL 66A

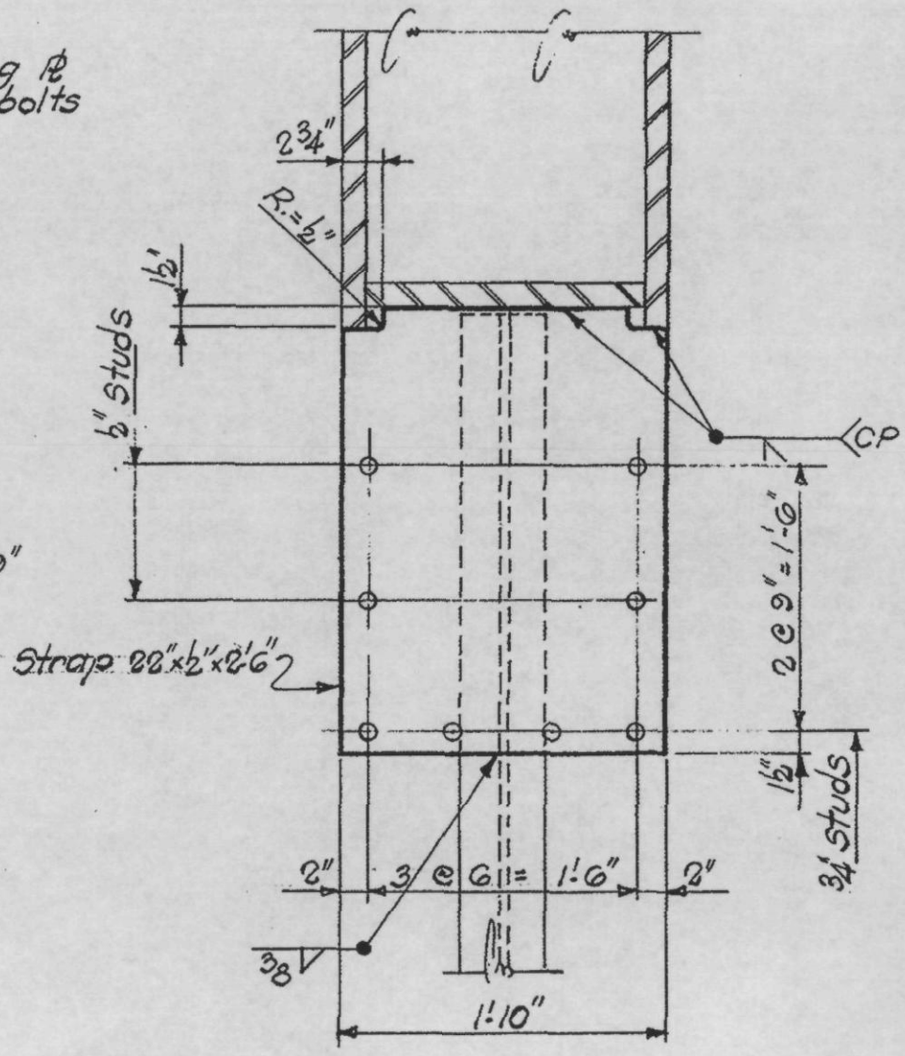

DETAIL 66B

LICENSED PROFESSIONAL ENGINEER
LESLIE E. ROBERTSON
No. 34360
UNIVERSITY OF THE STATE OF NEW YORK

DESIGNED

DRAWN S.T.M.

REVIEWED W Brewer

18-AB2-66.1

SKILLING, HELLE, CHRISTIANSEN, ROBERTSON — Structural & Civil Engineers

PROJECT: THE WORLD TRADE CENTER | TITLE: STRAP ANCHOR CORE DETAIL 66 | DATE: 4-30-69

REVISIONS

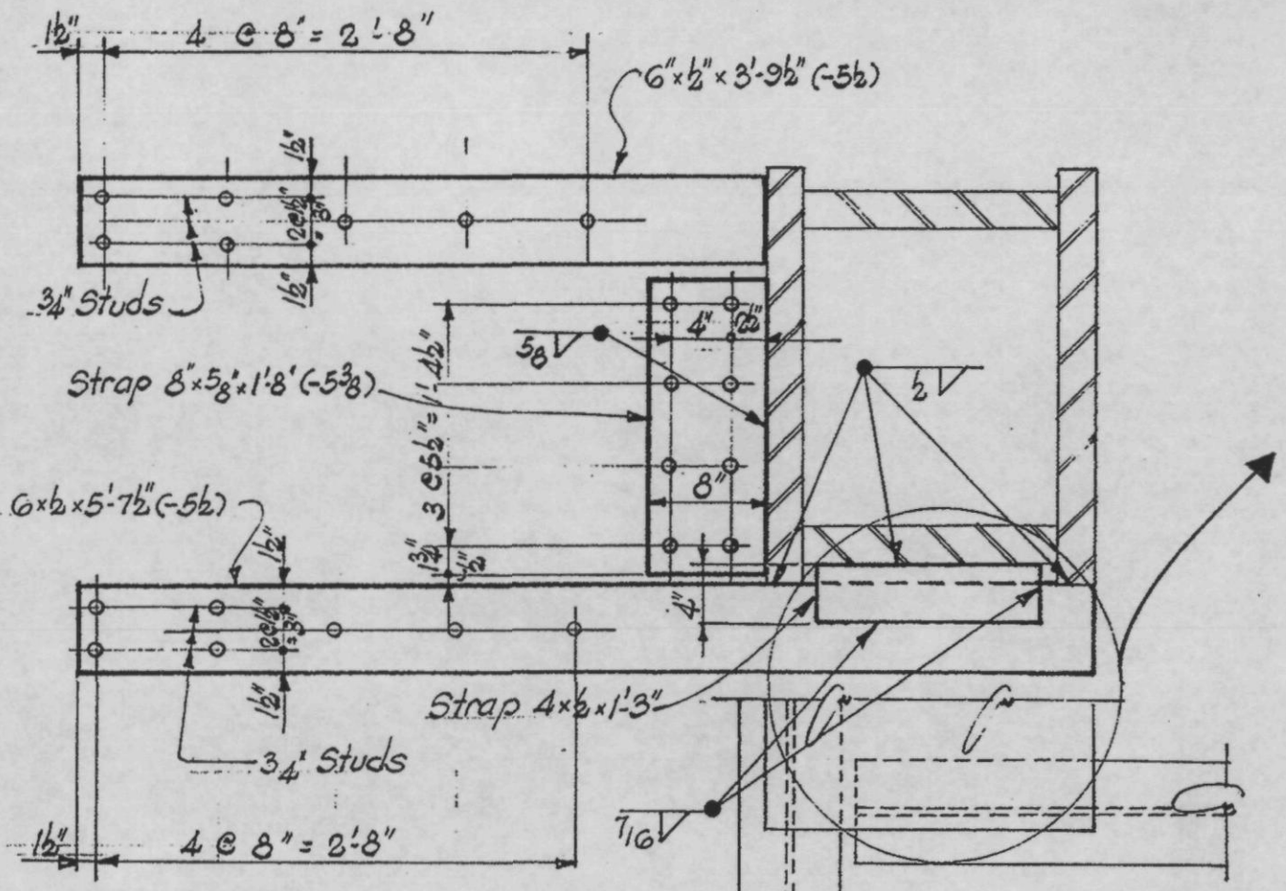

DETAIL 66C

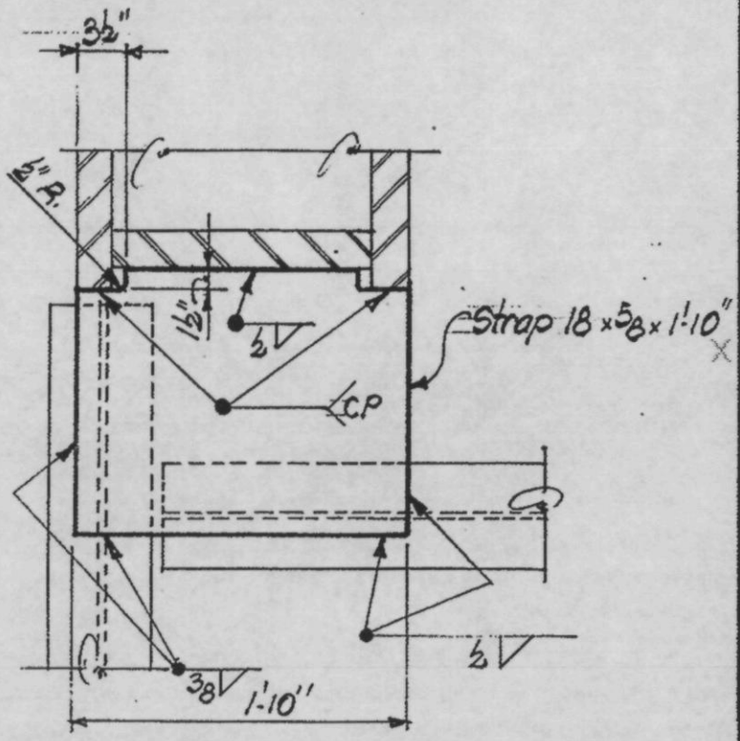

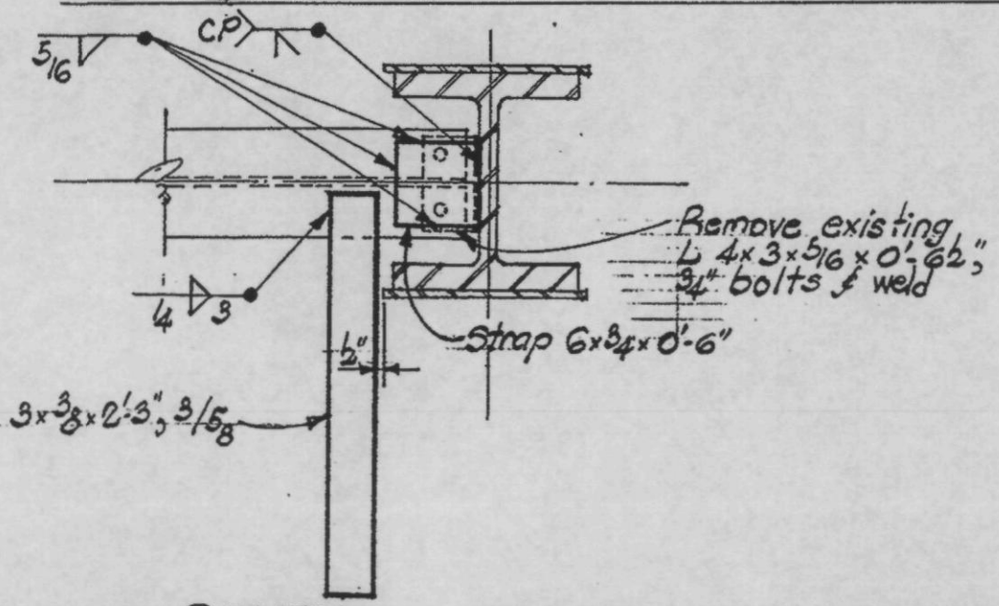

DETAIL 66D

LICENSED PROFESSIONAL ENGINEER
LESLIE E. ROBERTSON
No. 34360
UNIVERSITY OF THE STATE OF NEW YORK

DESIGNED

DRAWN
S.T.M.

REVIEWED
W J Brewer

18-AB2-66.2

SKILLING, HELLE, CHRISTIANSEN, ROBERTSON — Structural & Civil Engineers

PROJECT THE WORLD TRADE CENTER | TITLE STRAP ANCHOR - CORE - DETAIL 66 | DATE 4/30/69

REVISIONS

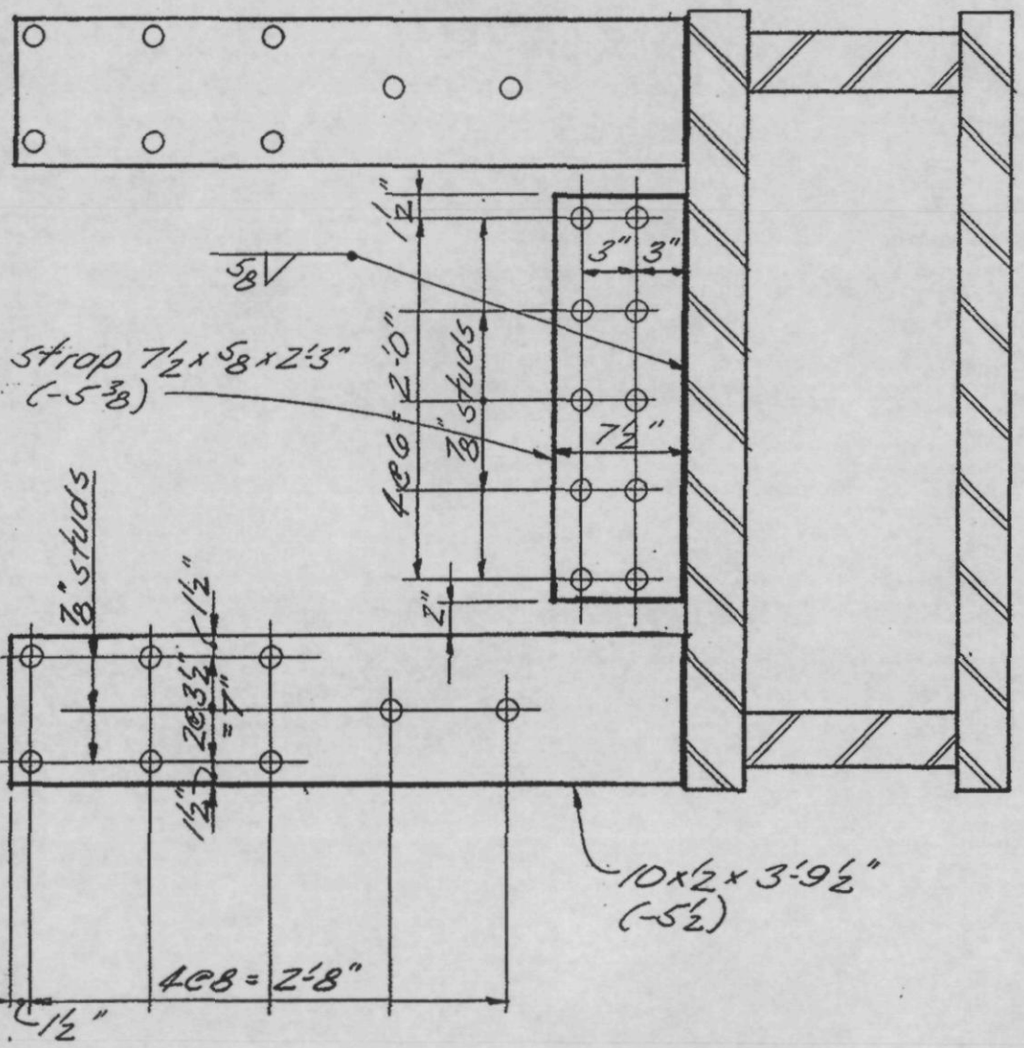

DETAIL 66E

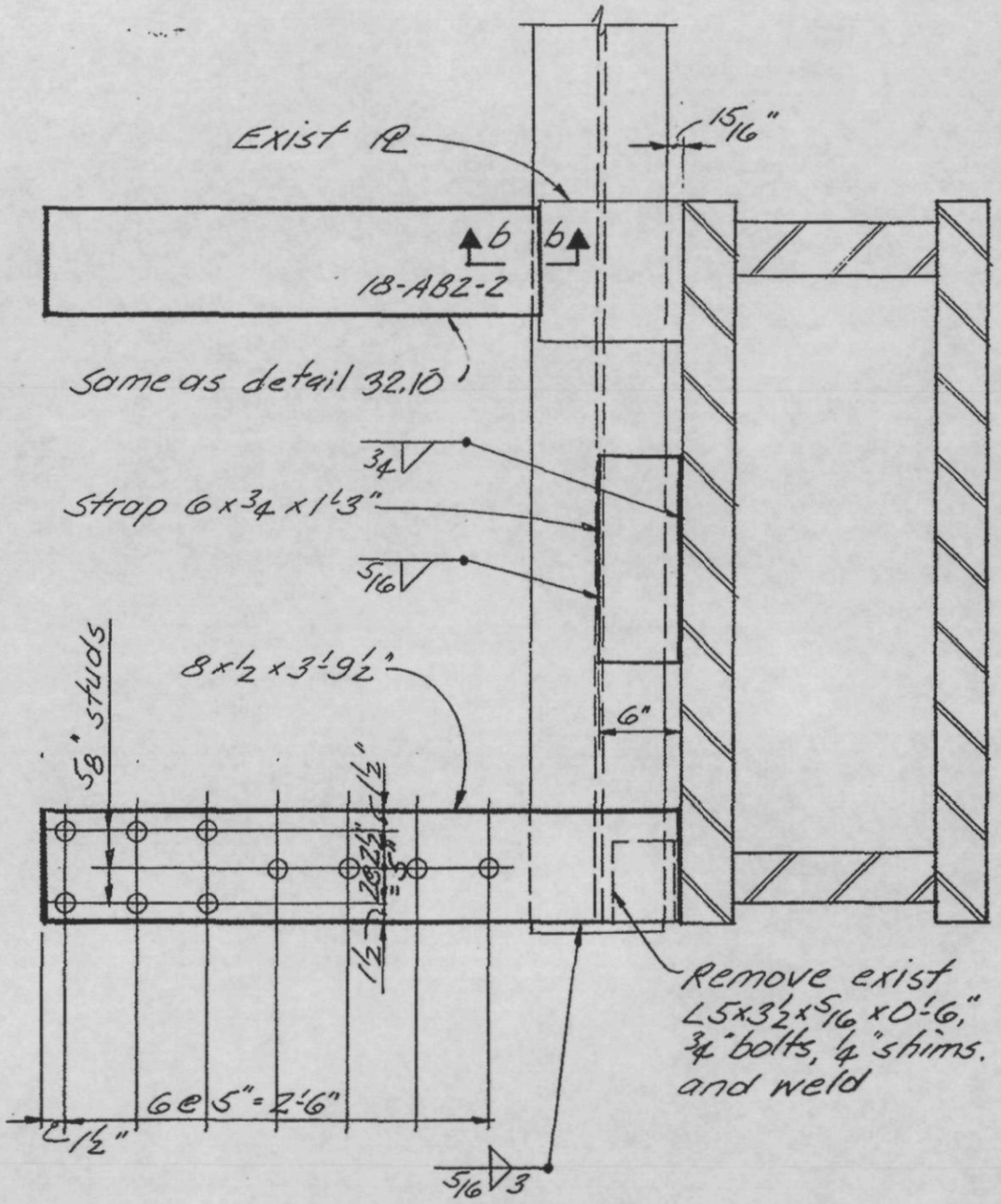

DETAIL 66F

LICENSED PROFESSIONAL ENGINEER — LESLIE E. ROBERTSON — No. 34360 — UNIVERSITY OF THE STATE OF NEW YORK

DESIGNED

DRAWN J. Adams

REVIEWED W. Brewer

18-ABZ-66.3

SKILLING, HELLE, CHRISTIANSEN, ROBERTSON — Structural & Civil Engineers

PROJECT THE WORLD TRADE CENTER | TITLE STRAP ANCHORS - CORE - DETAIL 67 | DATE 4/30/69

REVISIONS

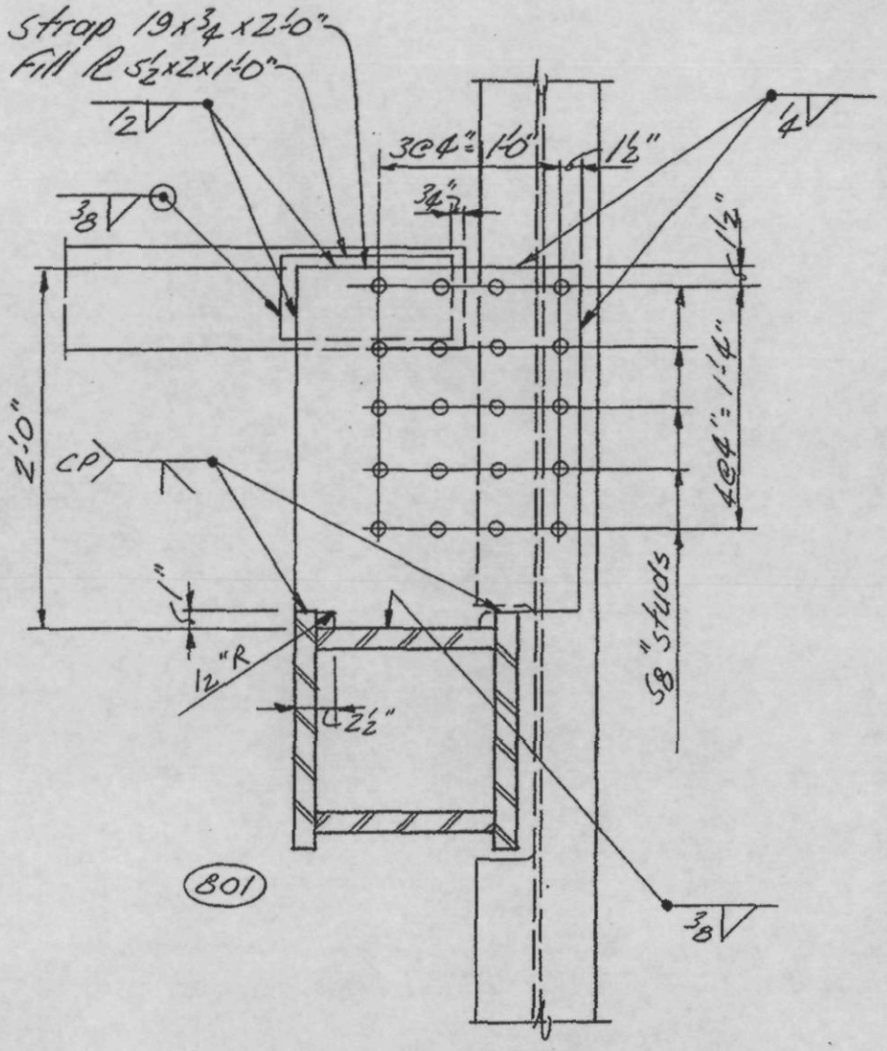

DETAIL 67A

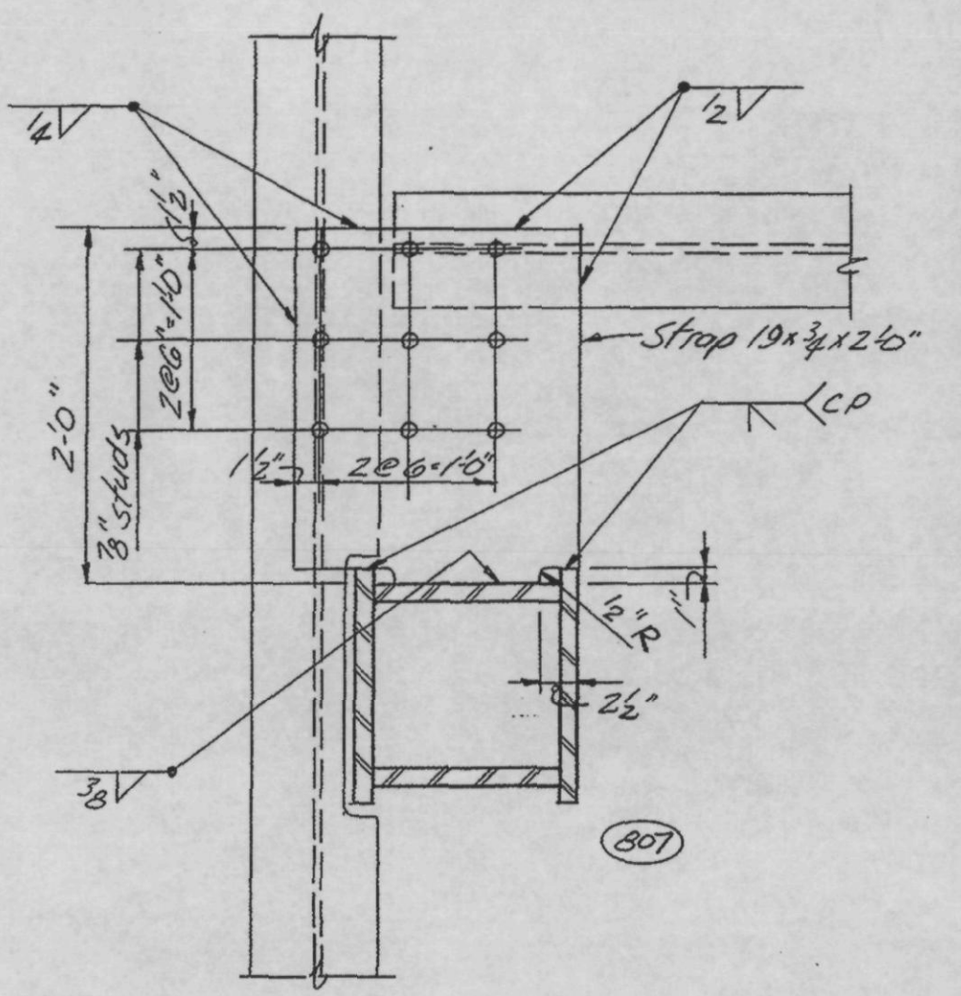

DETAIL 67B

LICENSED PROFESSIONAL ENGINEER
LESLIE E. ROBERTSON
No. 34360
UNIVERSITY OF THE STATE OF NEW YORK

DESIGNED

DRAWN J. Adams

REVIEWED W. Brewer

18-ABZ-67.1

SKILLING, HELLE, CHRISTIANSEN, ROBERTSON — Structural & Civil Engineers

PROJECT THE WORLD TRADE CENTER | TITLE STRAP ANCHOR - CORE - DETAIL 67 | DATE 4/30/69

REVISIONS

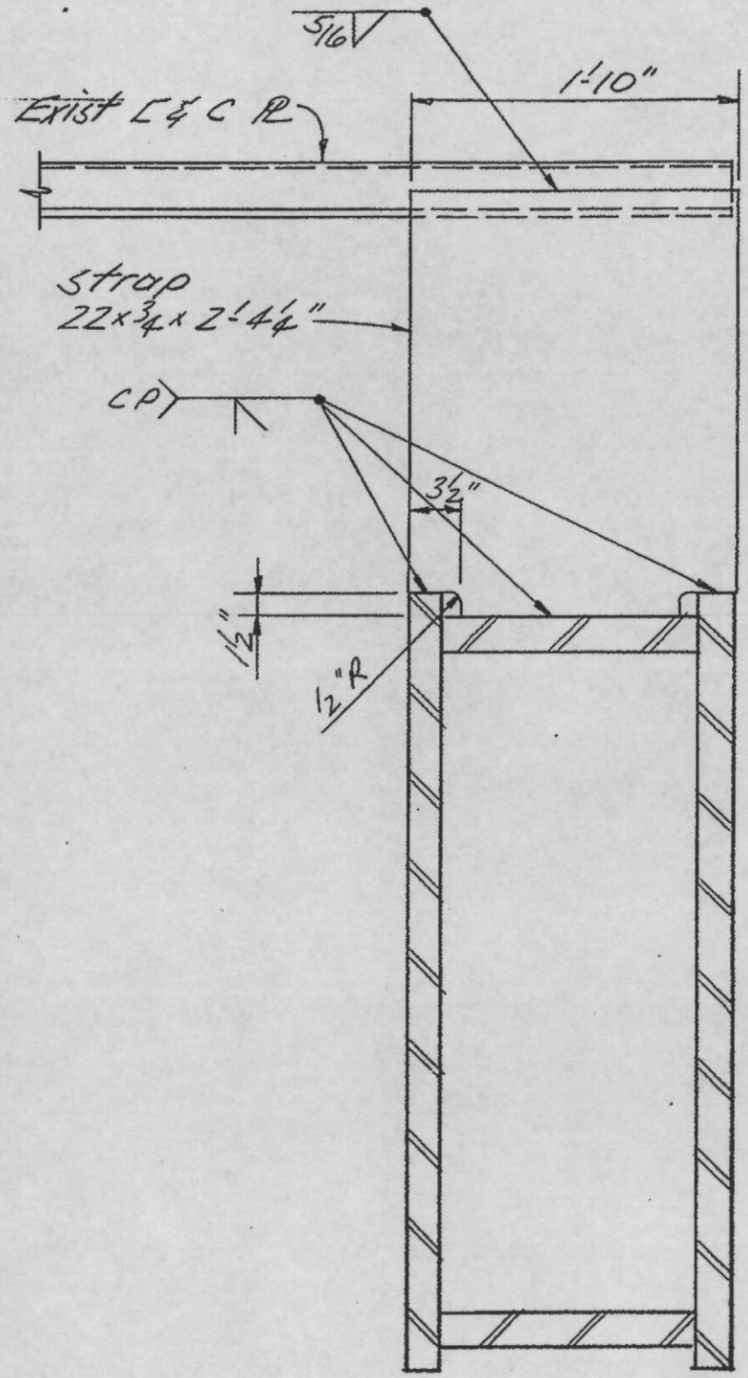

DETAIL 67C

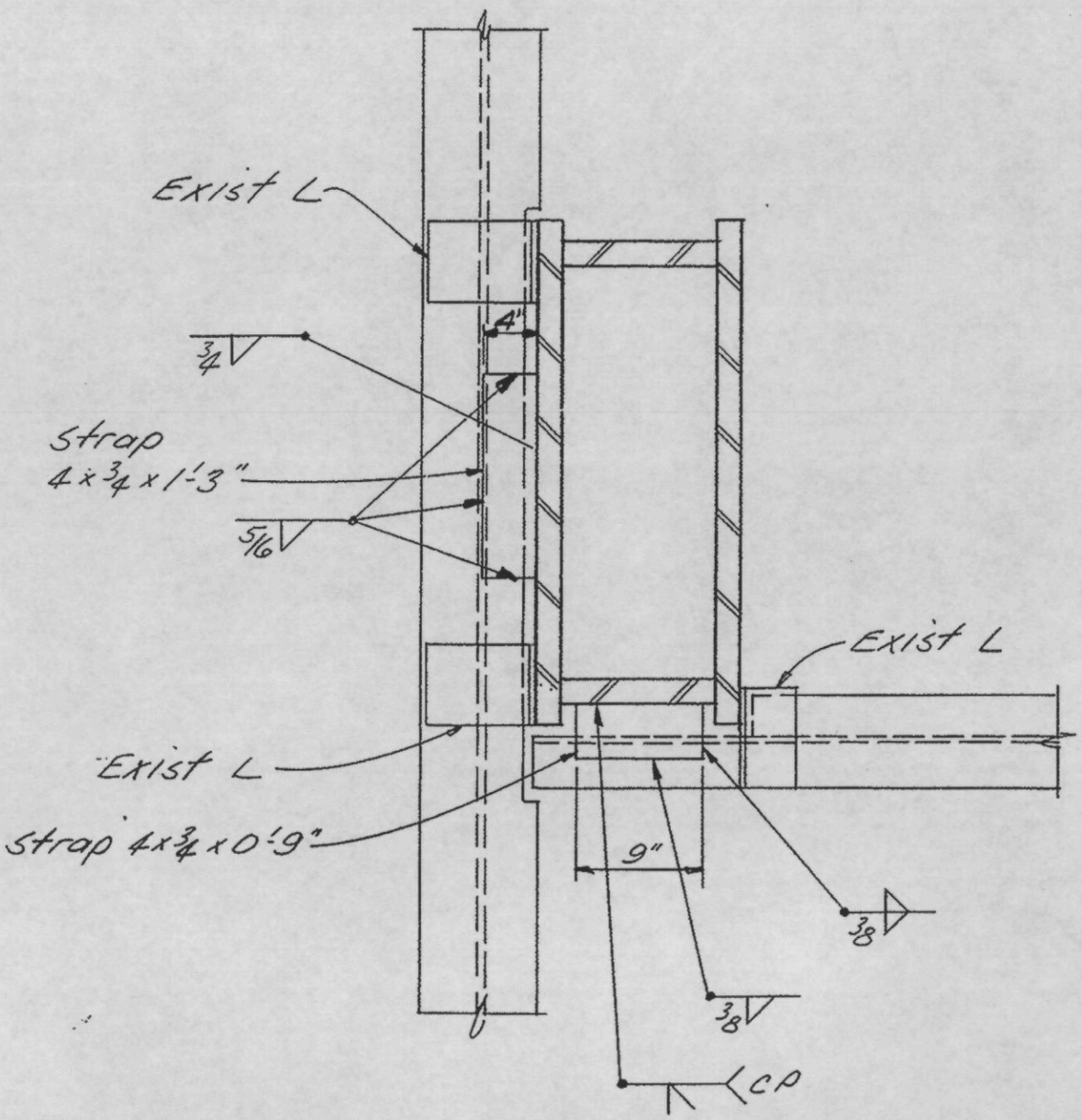

DETAIL 67D

LICENSED PROFESSIONAL ENGINEER
LESLIE E. ROBERTSON
No. 34360
UNIVERSITY OF THE STATE OF NEW YORK

DESIGNED

DRAWN J. Adams

REVIEWED W. Brewer

18-AB2-67.2

SKILLING, HELLE, CHRISTIANSEN, ROBERTSON — Structural & Civil Engineers

PROJECT THE WORLD TRADE CENTER | TITLE STRAP ANCHOR CORE DETAIL 68 | DATE 4/30/69

REVISIONS

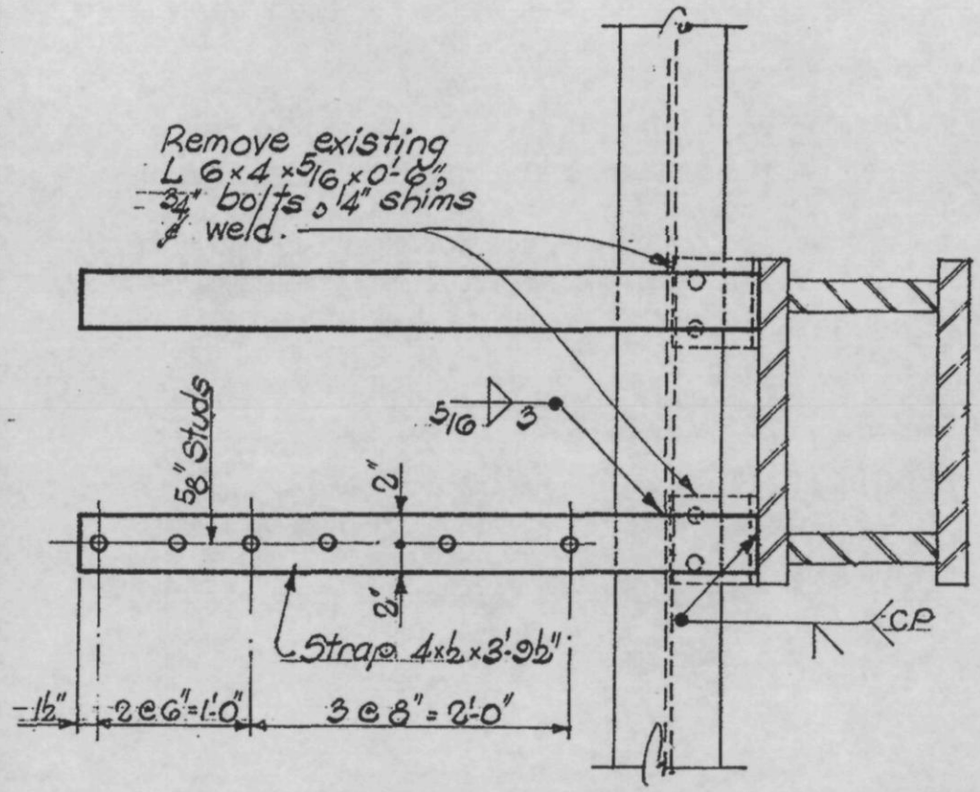

DETAIL 68A

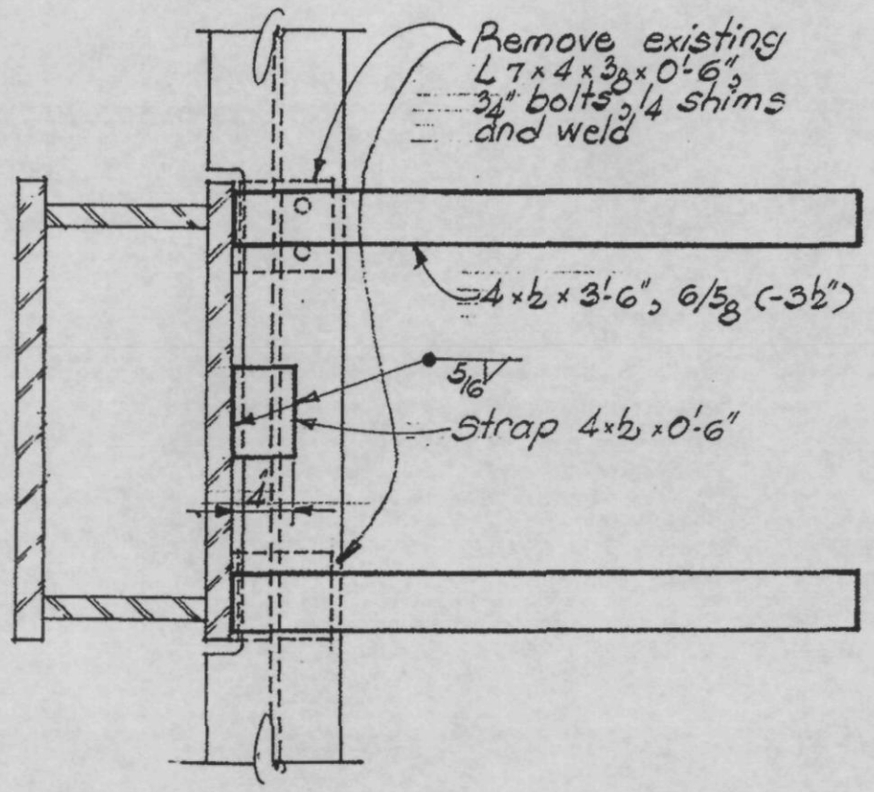

DETAIL 68B

LICENSED PROFESSIONAL ENGINEER
LESLIE E. ROBERTSON
No. 34360
UNIVERSITY OF THE STATE OF NEW YORK

DESIGNED

DRAWN S.T.M.

REVIEWED W. Brewer

18-AB2-68

SKILLING, HELLE, CHRISTIANSEN, ROBERTSON — Structural & Civil Engineers

PROJECT: THE WORLD TRADE CENTER | TITLE: STRAP ANCHORS - CORE - DETAIL 69 | DATE: 3-20-69

REVISIONS

10/1/69

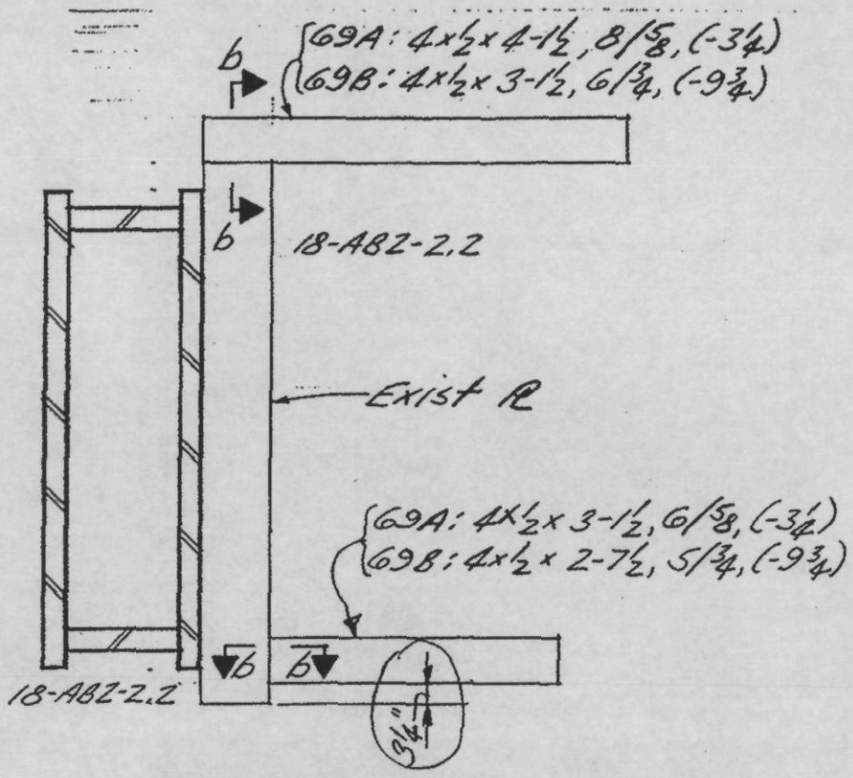

69A & B

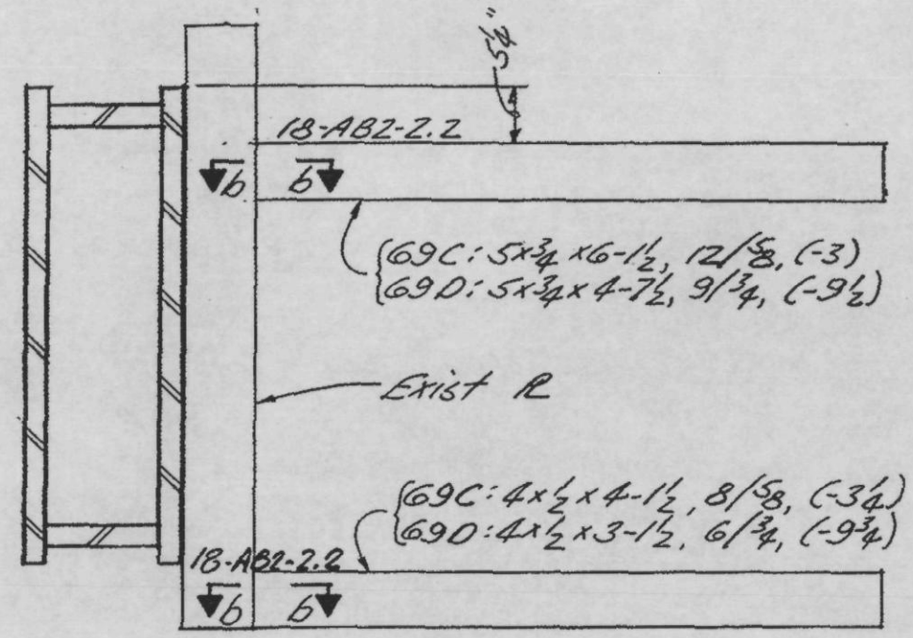

69 C & D

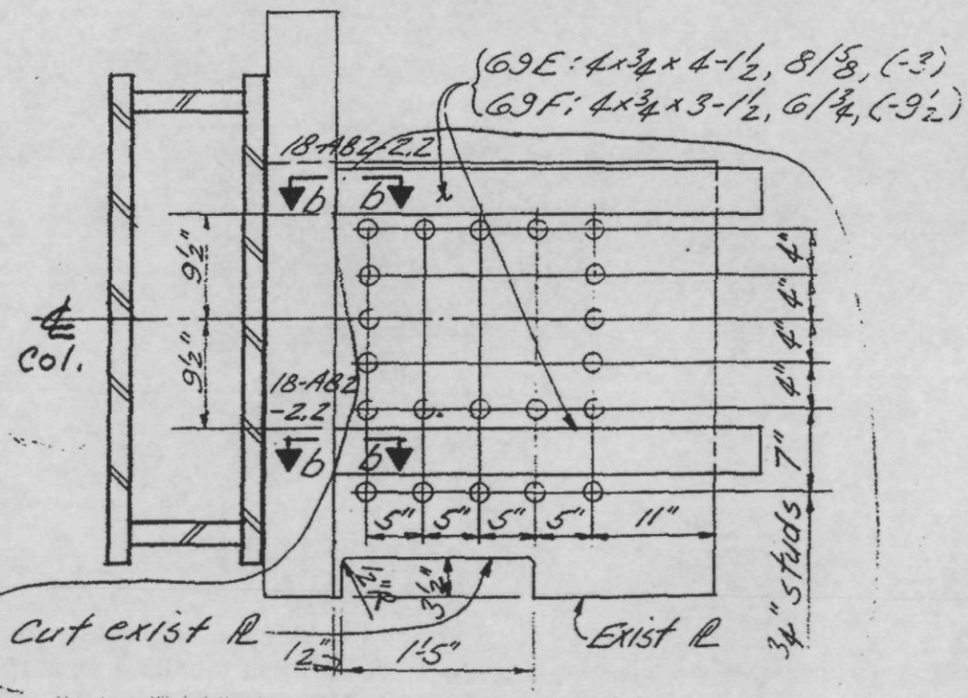

69 E & F

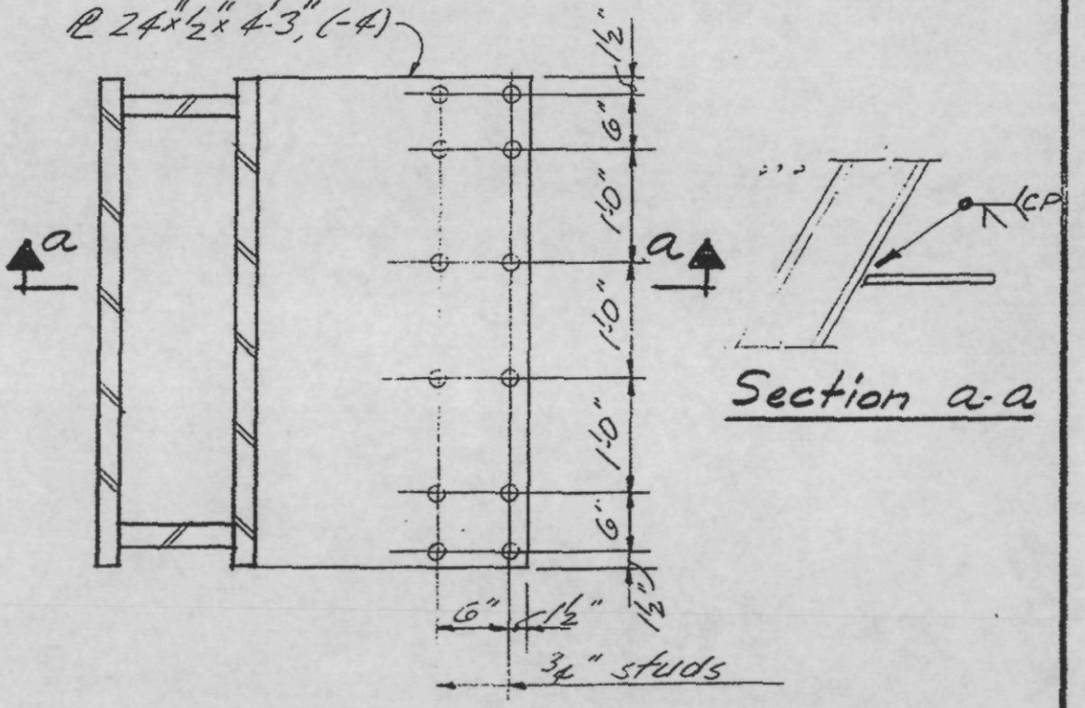

69G

LICENSED PROFESSIONAL ENGINEER
LESLIE E. ROBERTSON
No. 34360
UNIVERSITY OF THE STATE OF NEW YORK

DESIGNED

DRAWN J. Adams

REVIEWED W. Brown

18-ABZ-69.1

SKILLING HELLE CHRISTIANSEN, ROBERTSON — Structural & Civil Engineers

PROJECT THE WORLD TRADE CENTER | TITLE STRAP ANCHORS - CORE - DETAIL 69 | DATE 10-7-69

REVISIONS

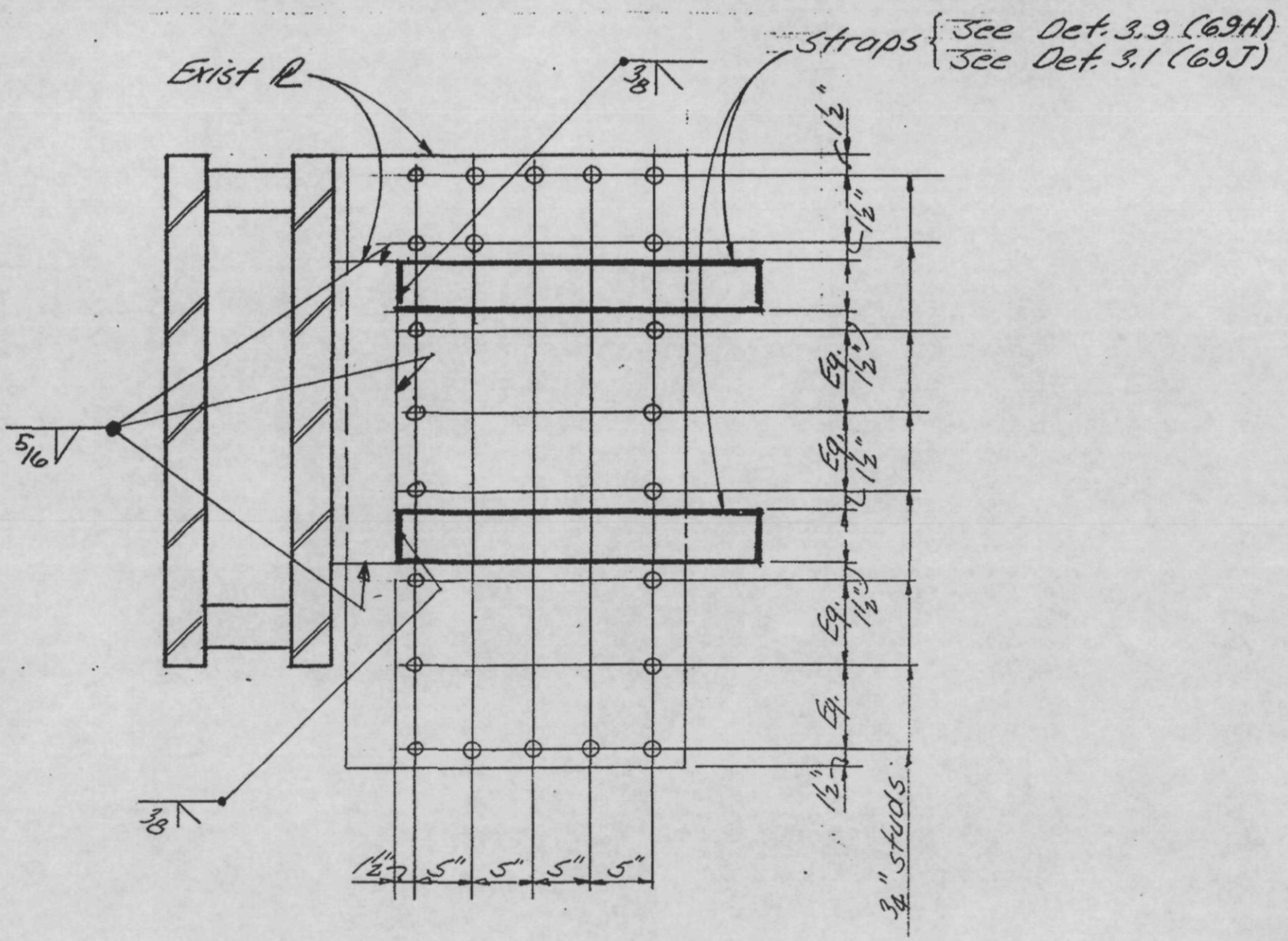

Details 69H & 69J

LICENSED PROFESSIONAL ENGINEER
LESLIE E. ROBERTSON
No. 34360
UNIVERSITY OF THE STATE OF NEW YORK

DESIGNED

DRAWN
J Hans

REVIEWED

18-AB2-69.2

SKILLING, HELLE, CHRISTIANSEN, ROBERTSON — Structural & Civil Engineers

PROJECT: THE WORLD TRADE CENTER | TITLE: STRAP ANCHOR - CORE - DETAIL 70 | DATE: 5-20-69

REVISIONS

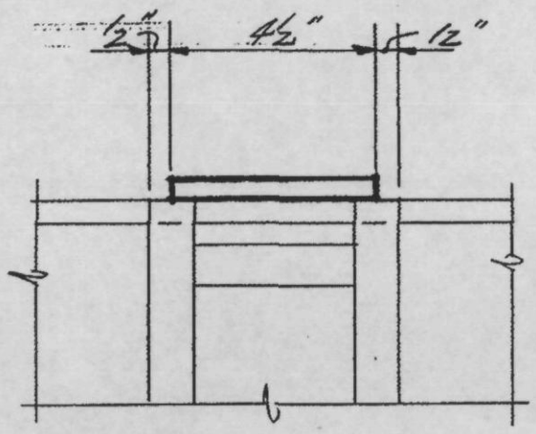

Section a-a

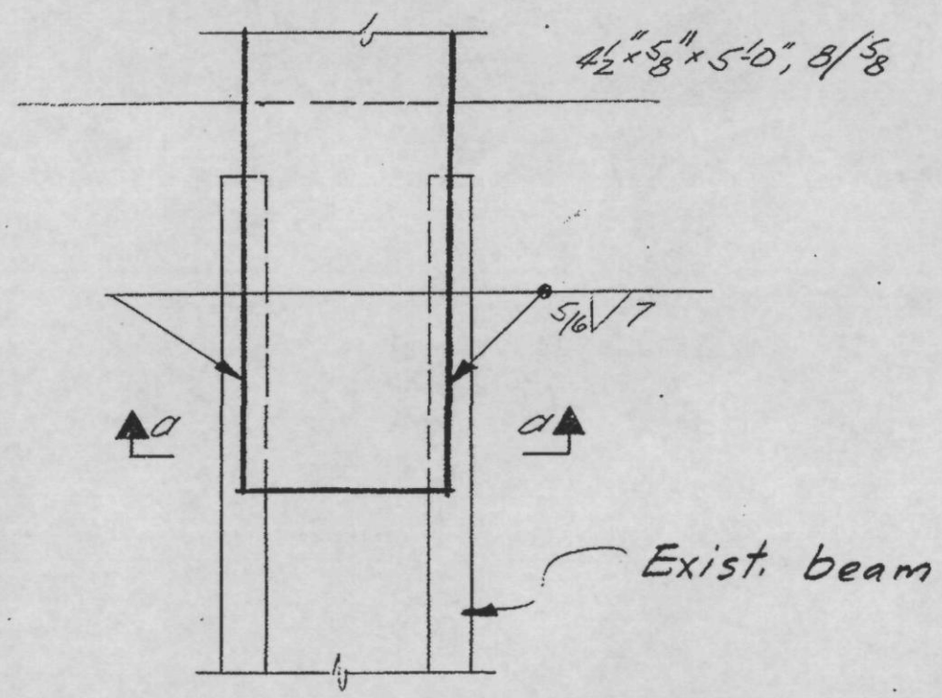

LICENSED PROFESSIONAL ENGINEER
LESLIE E. ROBERTSON
No. 34360
UNIVERSITY OF THE STATE OF NEW YORK

DESIGNED

DRAWN
J. Adams

REVIEWED
W. Brewer

18-A82-70

SKILLING, HELLE, CHRISTIANSEN, ROBERTSON — Structural & Civil Engineers

PROJECT: THE WORLD TRADE CENTER | TITLE: STRAP ANCHORS - CORE - DETAIL 71 | DATE: 5-20-69

REVISIONS

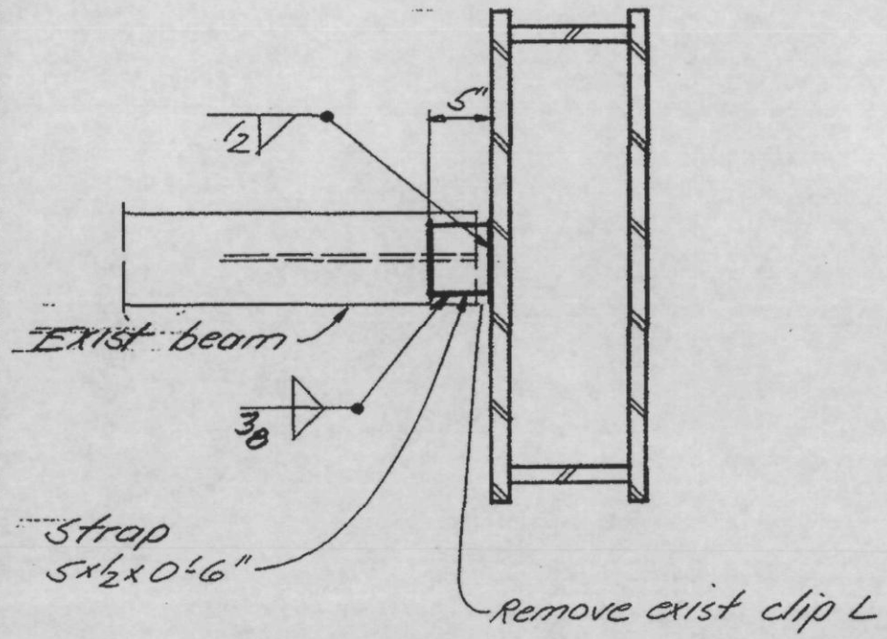

71A

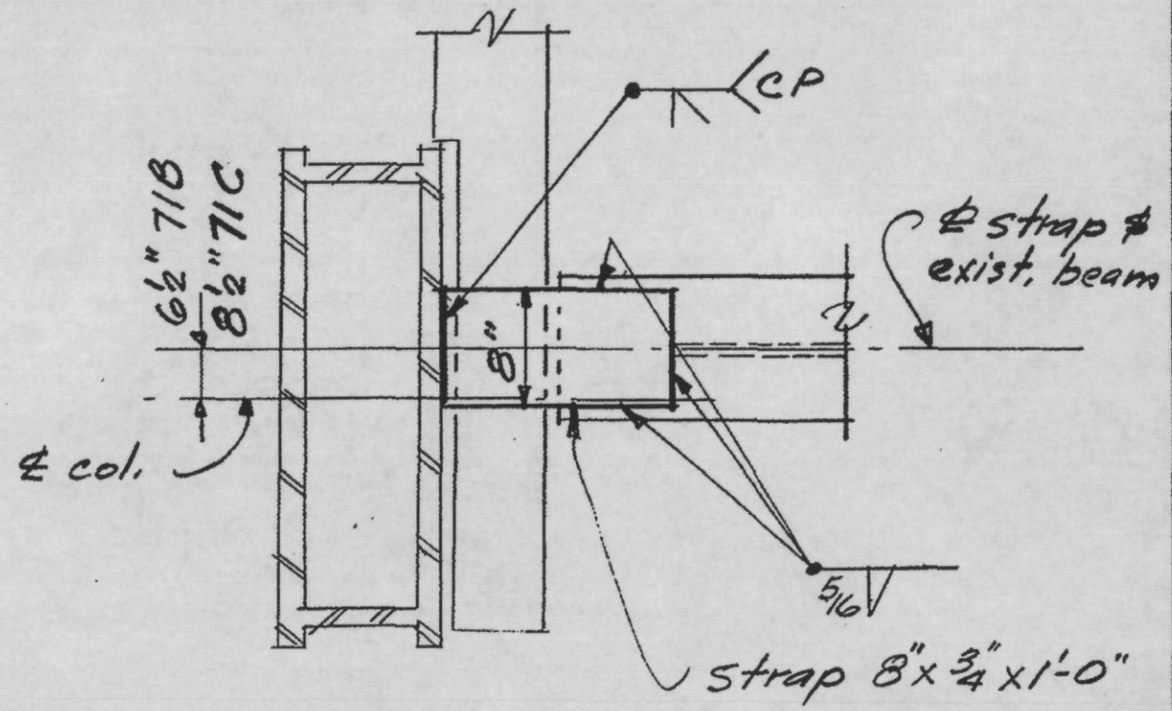

71B & C

LICENSED PROFESSIONAL ENGINEER
LESLIE E. ROBERTSON
No. 34360
UNIVERSITY OF THE STATE OF NEW YORK

DESIGNED

DRAWN
Adams

REVIEWED
W. Brewer

18-AB2-71

SKILLING, HELLE, CHRISTIANSEN, ROBERTSON — Structural & Civil Engineers

PROJECT: THE WORLD TRADE CENTER | TITLE: STRAP ANCHOR - CORE - DETAIL 72 | DATE: 3-20-69

REVISIONS

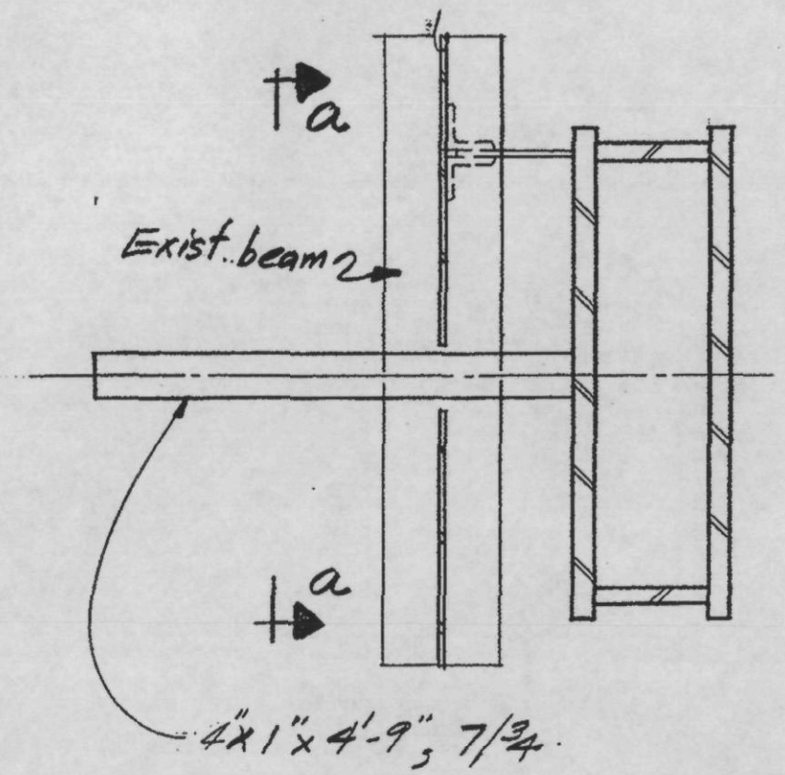

72 A

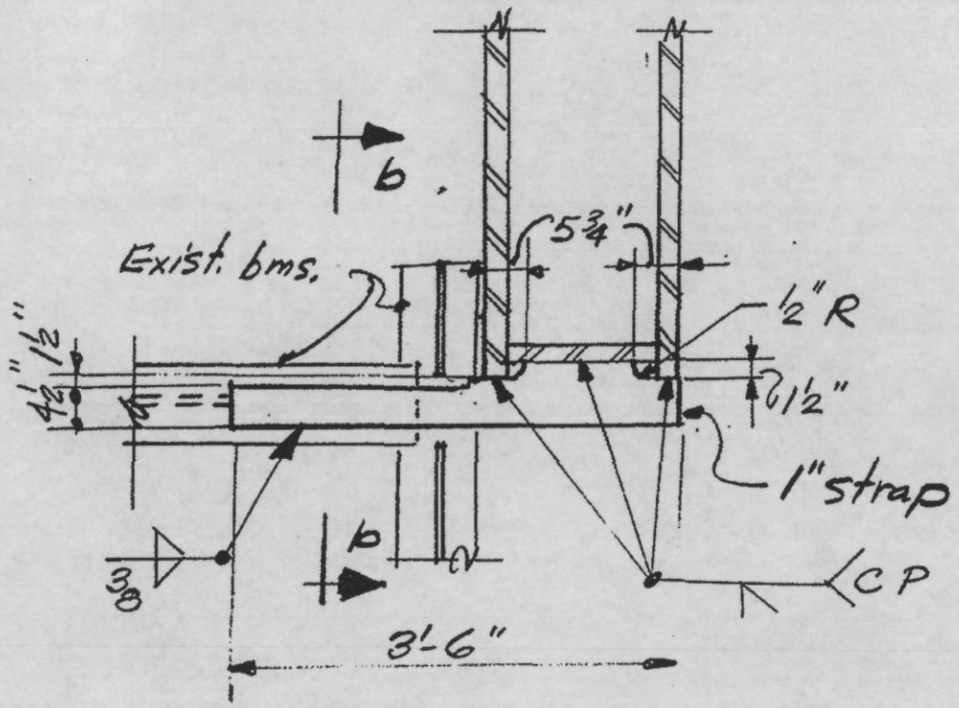

72 B

El. 284'-0"

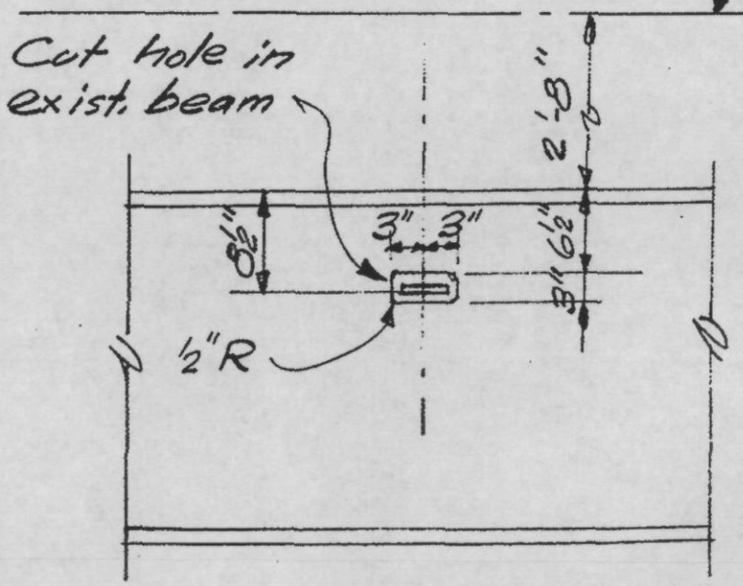

Section a-a

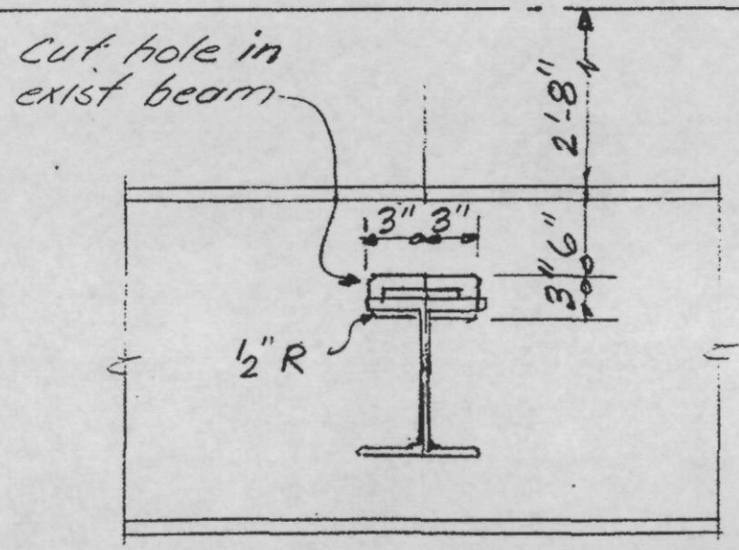

Section b-b

LICENSED PROFESSIONAL ENGINEER
LESLIE E. ROBERTSON
No. 34360
UNIVERSITY OF THE STATE OF NEW YORK

DESIGNED

DRAWN
J. Sams

REVIEWED
W. Brown

18-ABZ-72

SKILLING, HELLE, CHRISTIANSEN, ROBERTSON — Structural & Civil Engineers

PROJECT: THE WORLD TRADE CENTER | TITLE: STRAP ANCHORS - CORE - DETAIL 73 | DATE: 5-28-69

REVISIONS

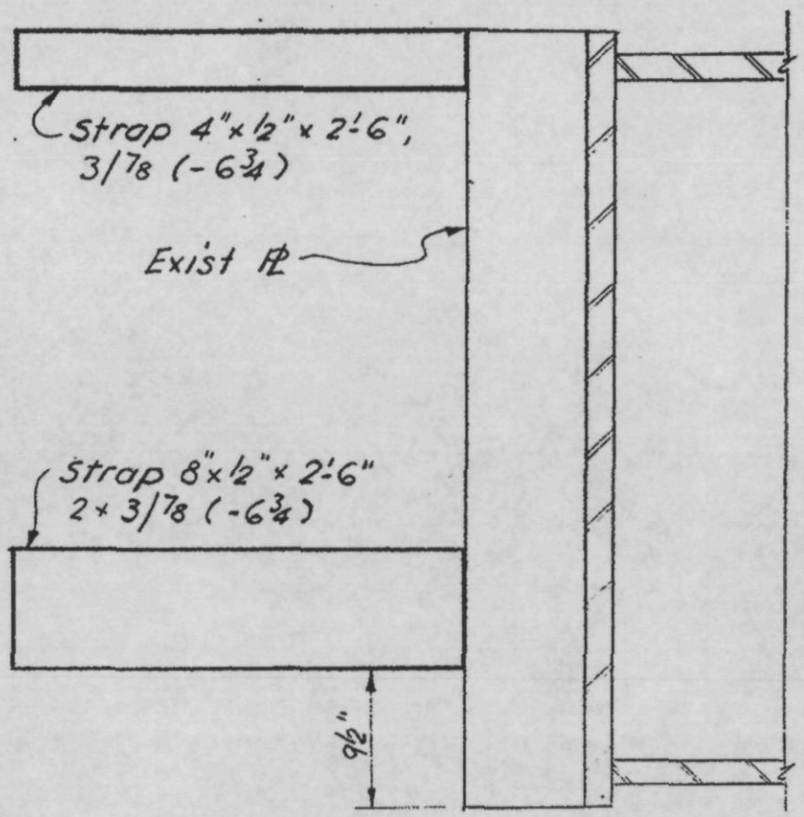

DETAIL 73 A

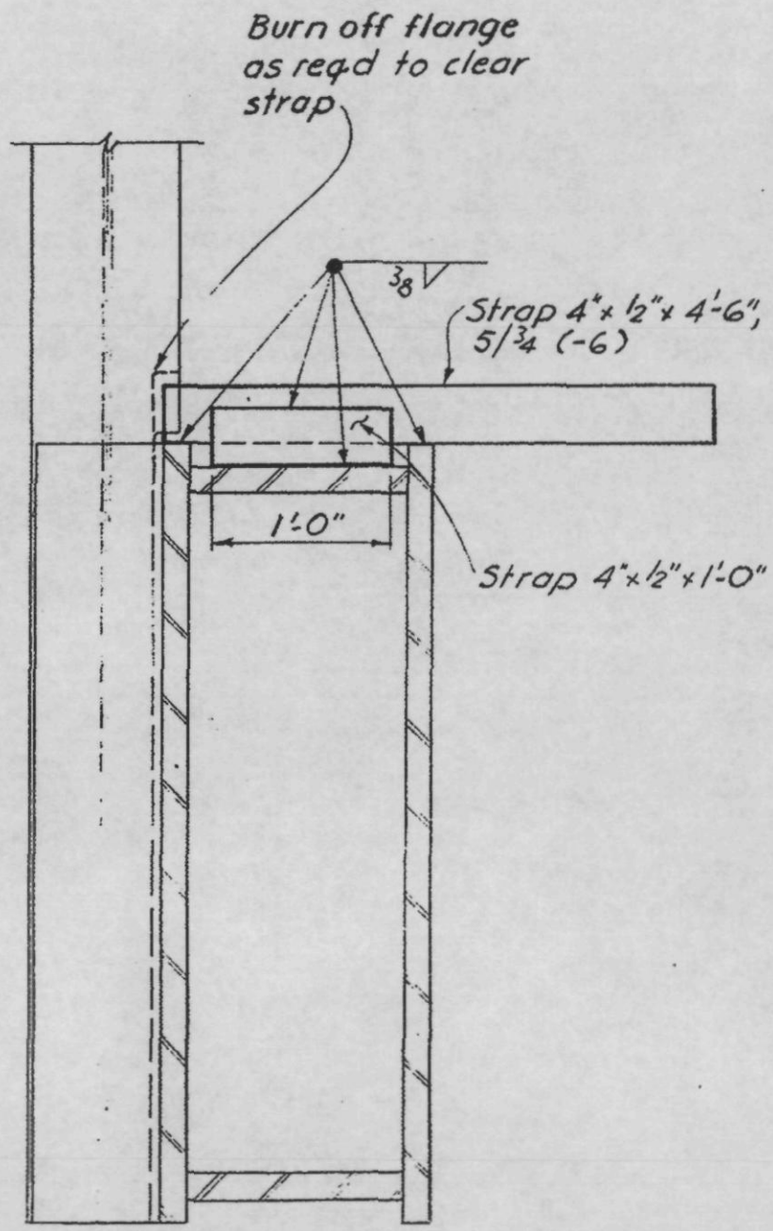

DETAIL 73 B

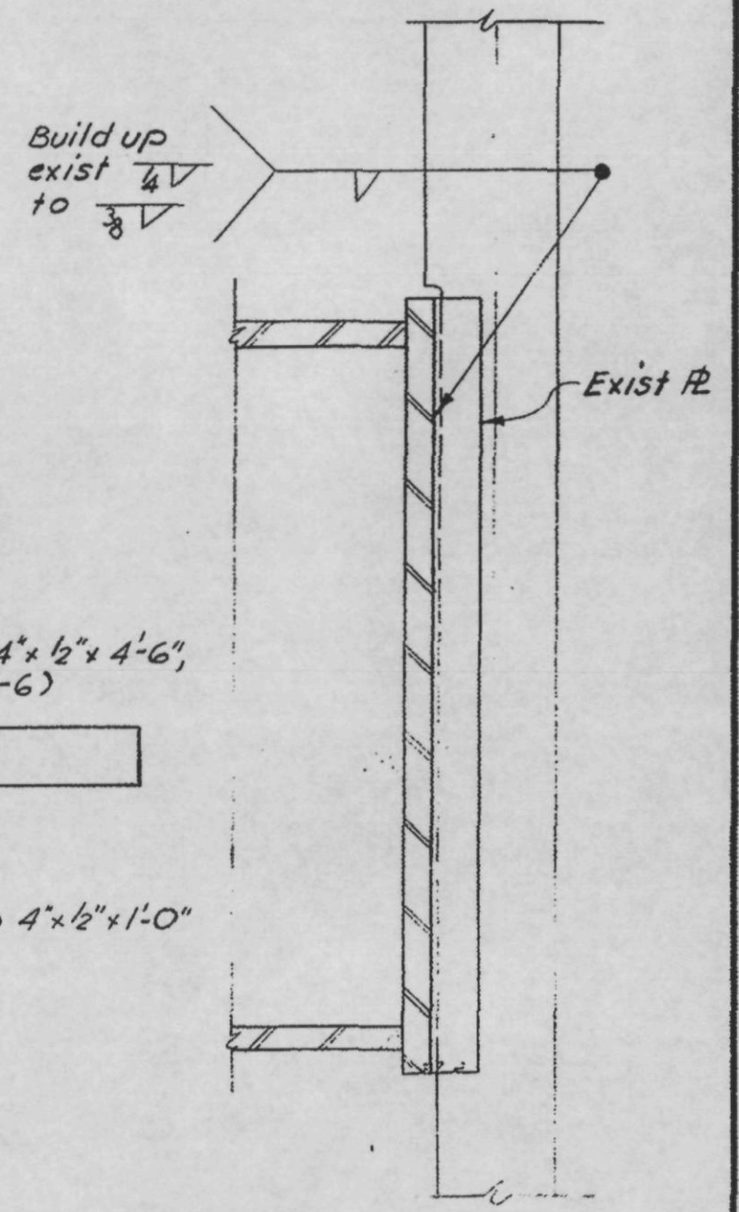

DETAIL 73 C

LICENSED PROFESSIONAL ENGINEER
LESLIE E. ROBERTSON
No. 34960
UNIVERSITY OF THE STATE OF NEW YORK

DESIGNED

DRAWN

REVIEWED

18-AB2-73

SKILLING, HELLE, CHRISTIANSEN, ROBERTSON — Structural & Civil Engineers

PROJECT THE WORLD TRADE CENTER | TITLE STRAP ANCHORS - CORE - DETAIL 74 | DATE 10-1-69

REVISIONS

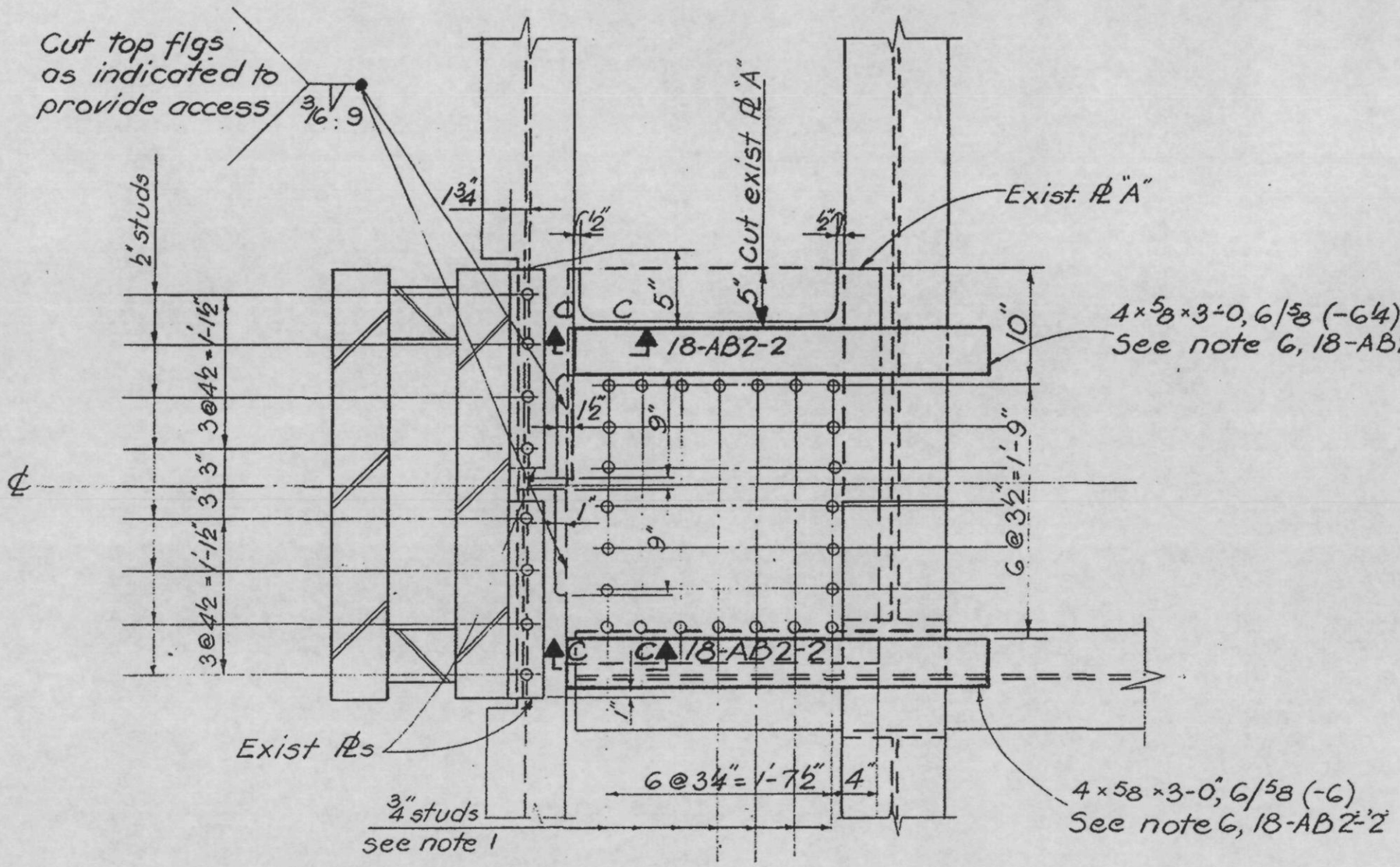

DETAIL 74A

Note 1. Studs to be place on exist ℄ "A" prior to installation of straps

LICENSED PROFESSIONAL ENGINEER — LESLIE E. ROBERTSON — No. 34360 — UNIVERSITY OF THE STATE OF NEW YORK

DESIGNED

DRAWN D.C. Huggins

REVIEWED

18-AB2-74.1

SKILLING, HELLE, CHRISTIANSEN, ROBERTSON — Structural & Civil Engineers

PROJECT THE WORLD TRADE CENTER | TITLE STRAP ANCHOR-CORE DETAIL 74 | DATE 10-1-69

REVISIONS

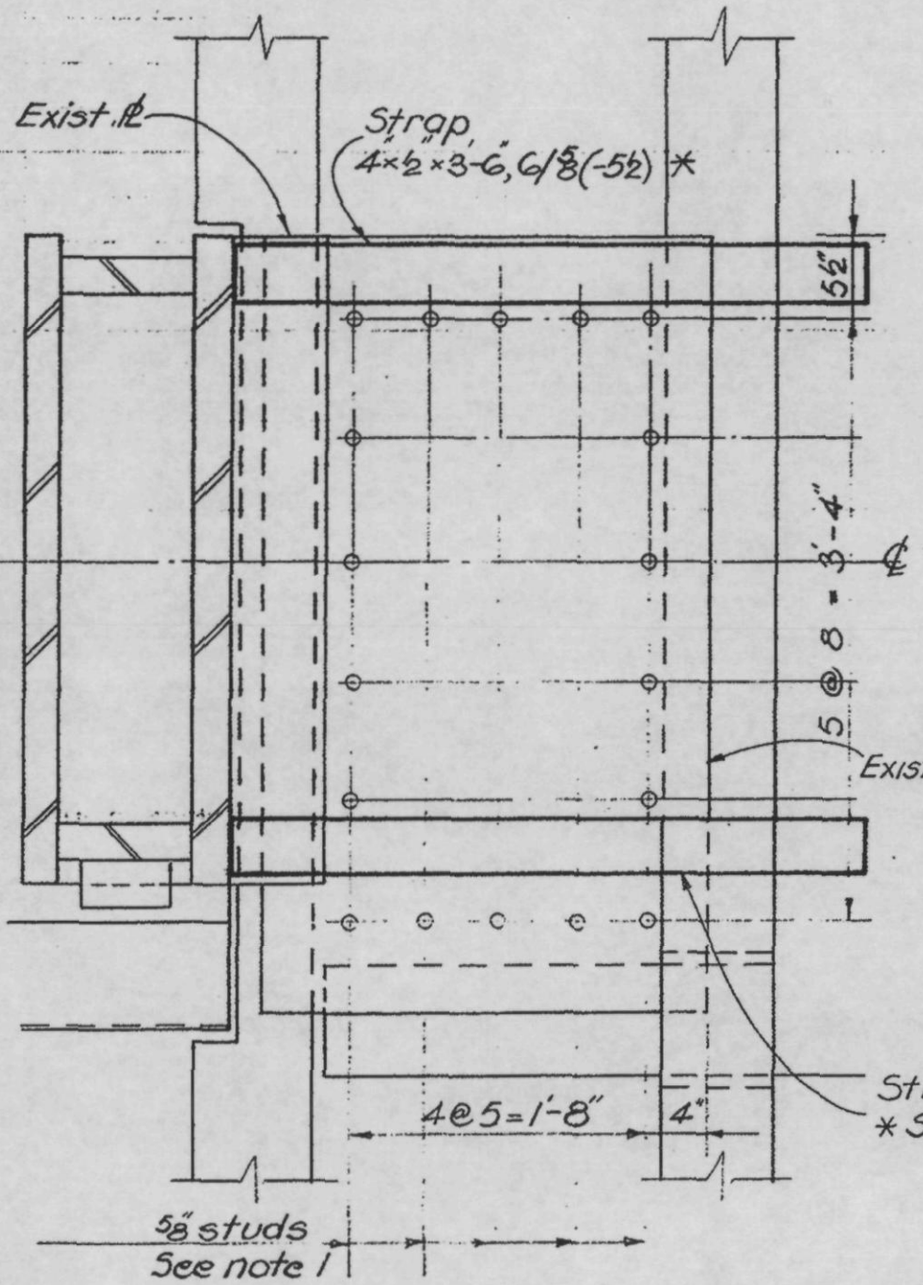

DETAIL 74B

Note 1 Studs to be place on existing ℄ A prior to installation of straps

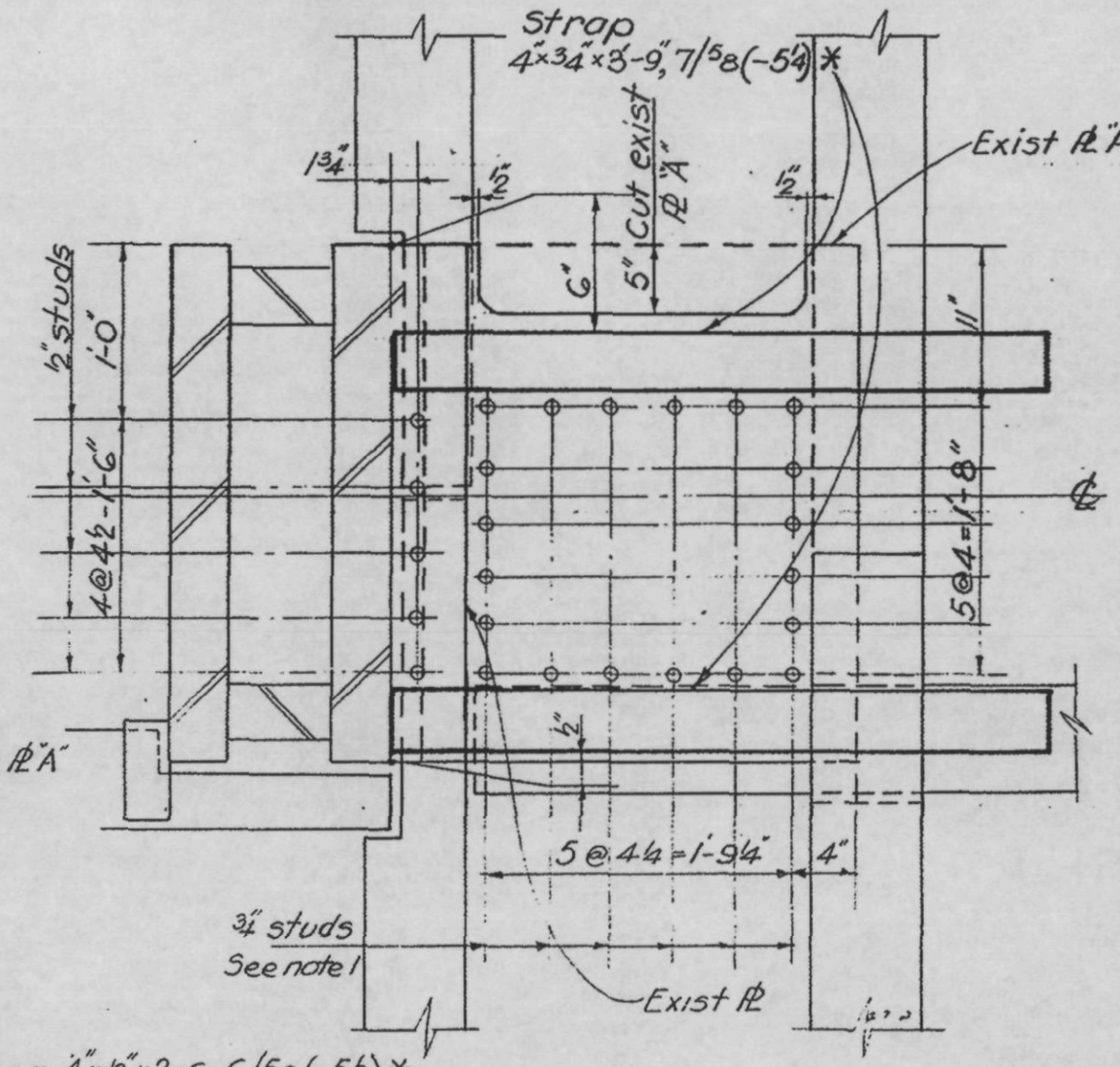

DETAIL 74C

Note 1 Studs to be place on exist ℄ "A" prior to installation of straps

LICENSED PROFESSIONAL ENGINEER
LESLIE E. ROBERTSON
No. 34360
UNIVERSITY OF THE STATE OF NEW YORK

DESIGNED

DRAWN
D. J. Huggins

REVIEWED

18-AB2-74.2

SKILLING, HELLE, CHRISTIANSEN, ROBERTSON — Structural & Civil Engineers

PROJECT: THE WORLD TRADE CENTER | TITLE: STRAP ANCHOR - CORE - DETAIL 75 | DATE: 10-1-69

REVISIONS

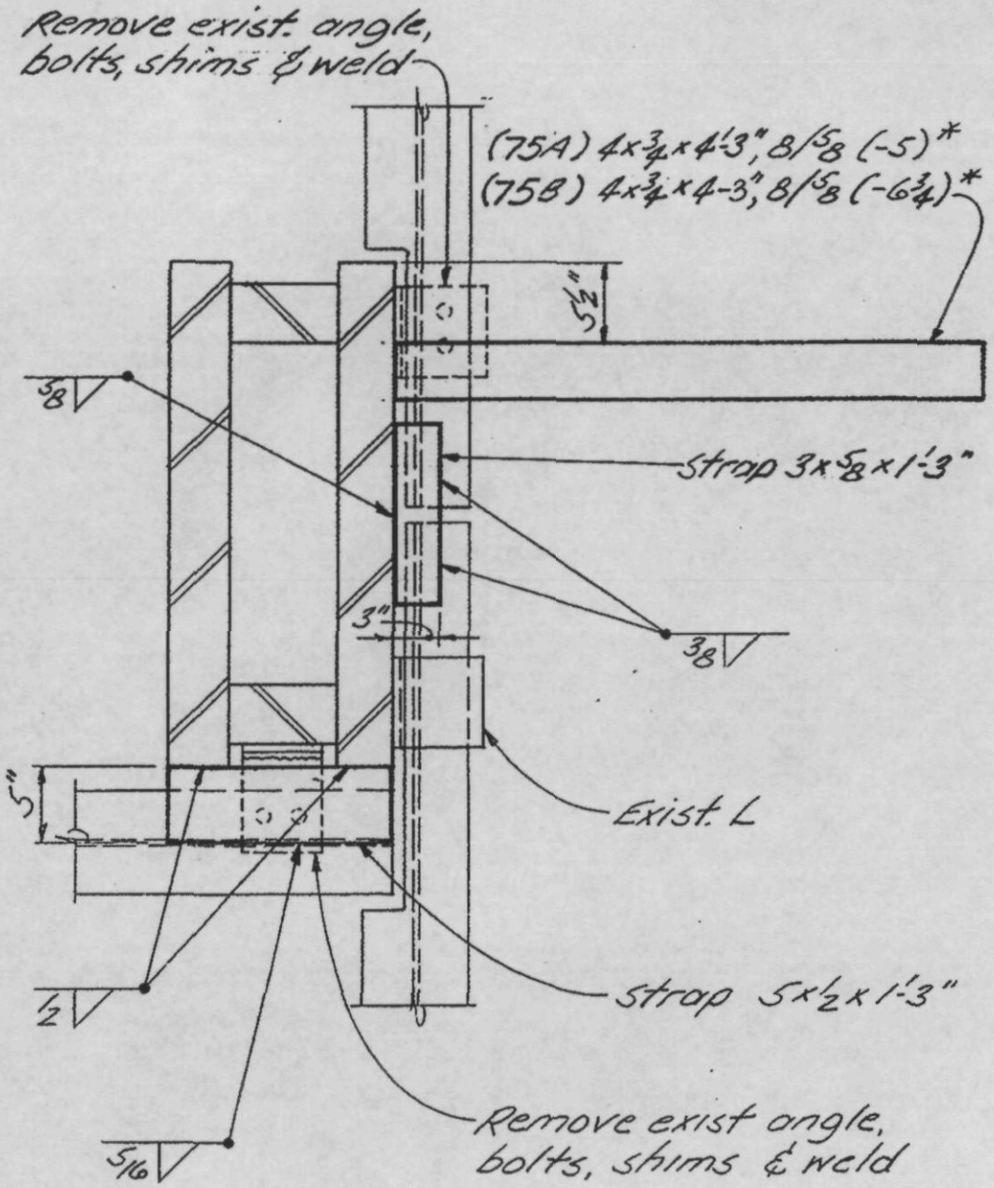

Details 75A and 75B

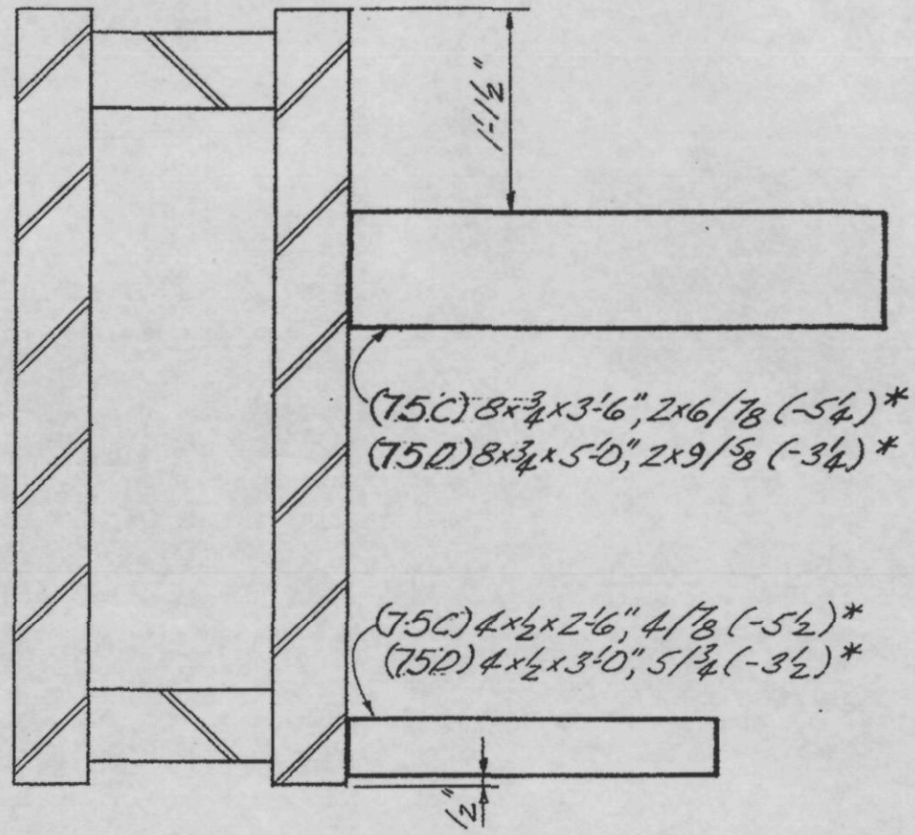

Details 75C and 75D

* See Note 6, 18-ABZ-2

LICENSED PROFESSIONAL ENGINEER — LESLIE E. ROBERTSON — No. 34360 — UNIVERSITY OF THE STATE OF NEW YORK

DESIGNED

DRAWN
J. Adams

REVIEWED

18-ABZ-75

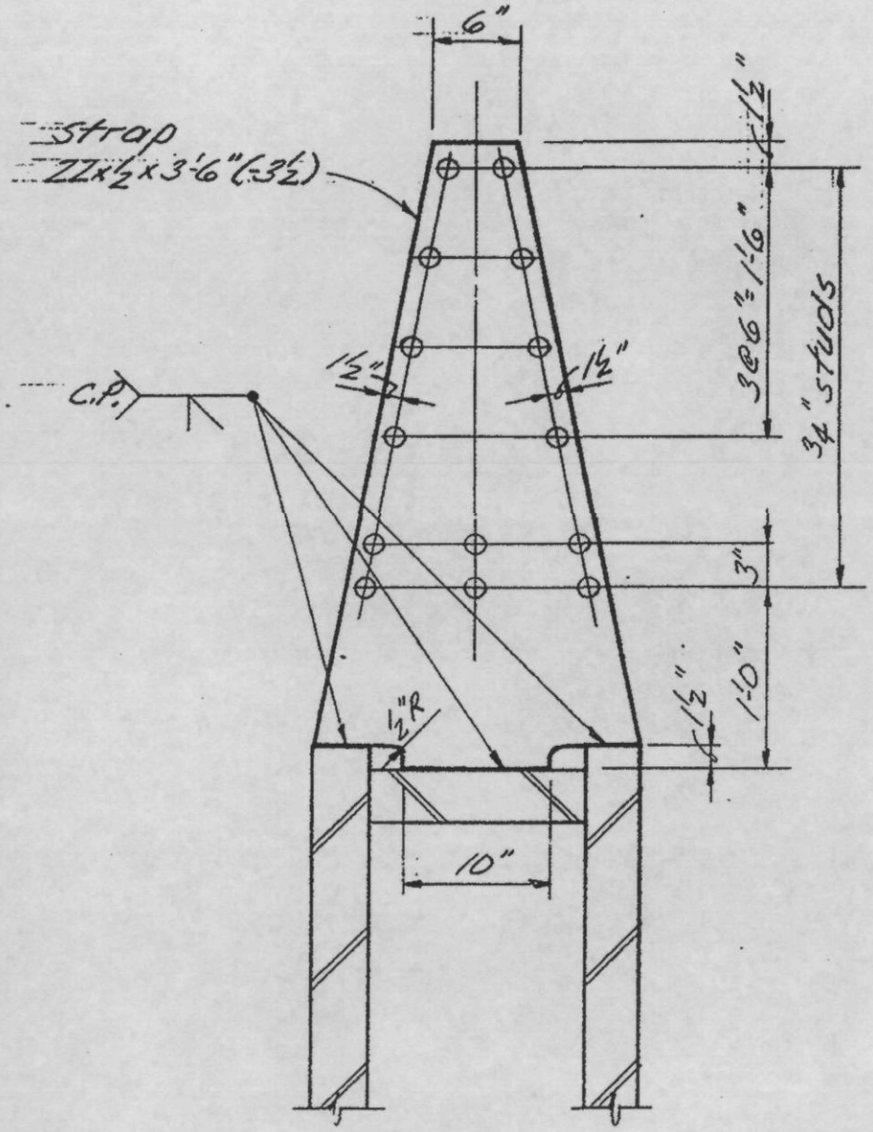

Detail 76A

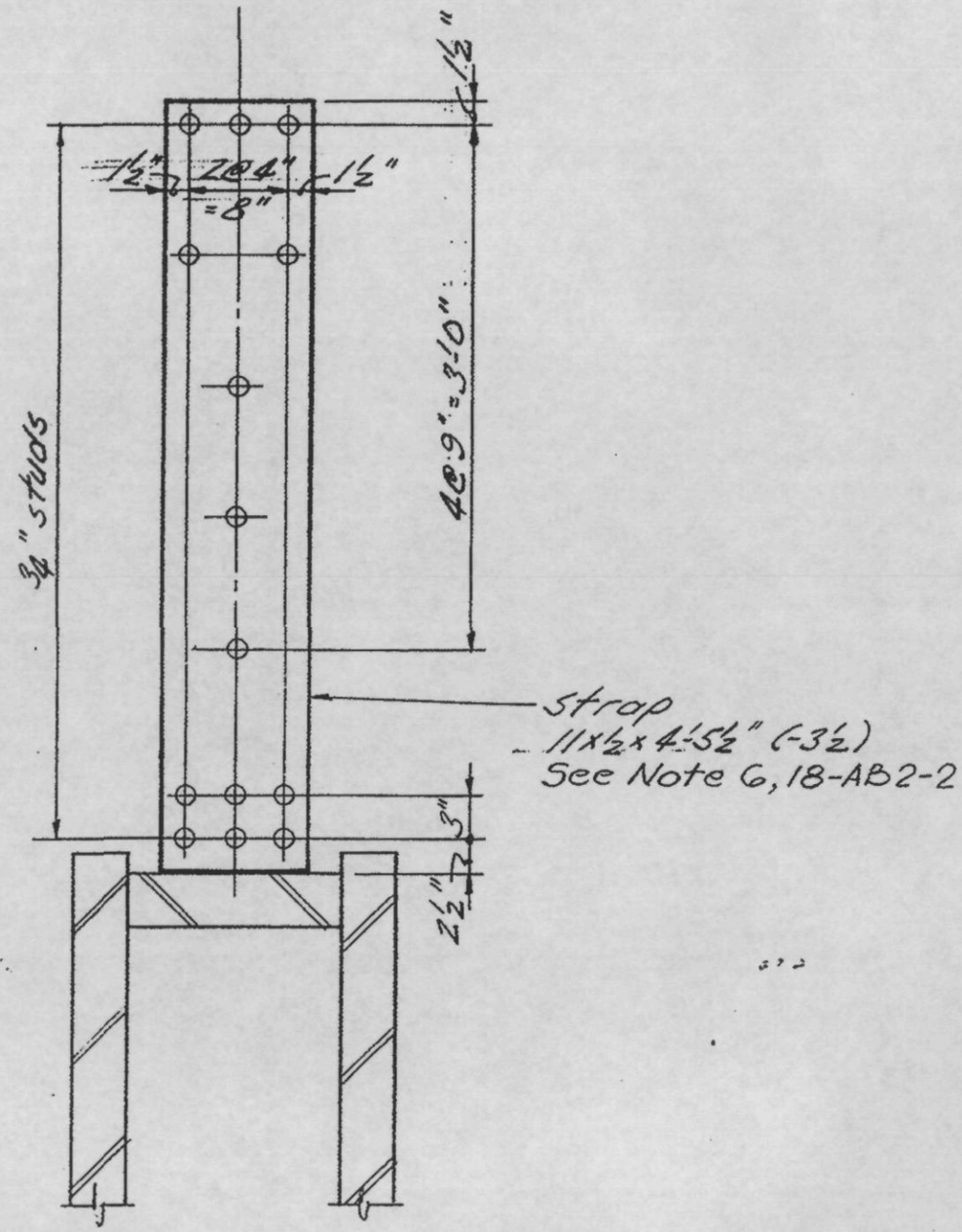

Detail 76B

LICENSED PROFESSIONAL ENGINEER
LESLIE E. ROBERTSON
No. 34360
UNIVERSITY OF THE STATE OF NEW YORK

DESIGNED

DRAWN
J. Adams

REVIEWED

18-ABZ-76

SKILLING, HELLE, CHRISTIANSEN, ROBERTSON — Structural & Civil Engineers

PROJECT: THE WORLD TRADE CENTER | TITLE: STRAP ANCHOR - CORE - DETAIL 77 | DATE: 10-1-69

REVISIONS

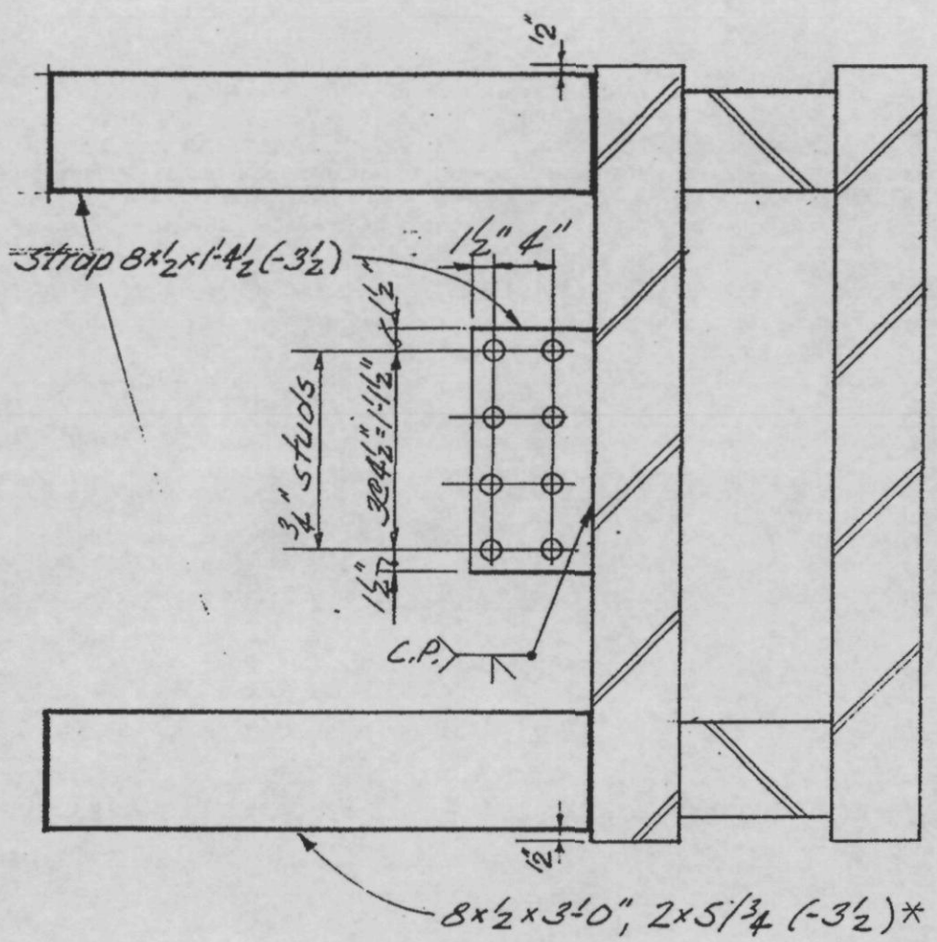

Detail 77A

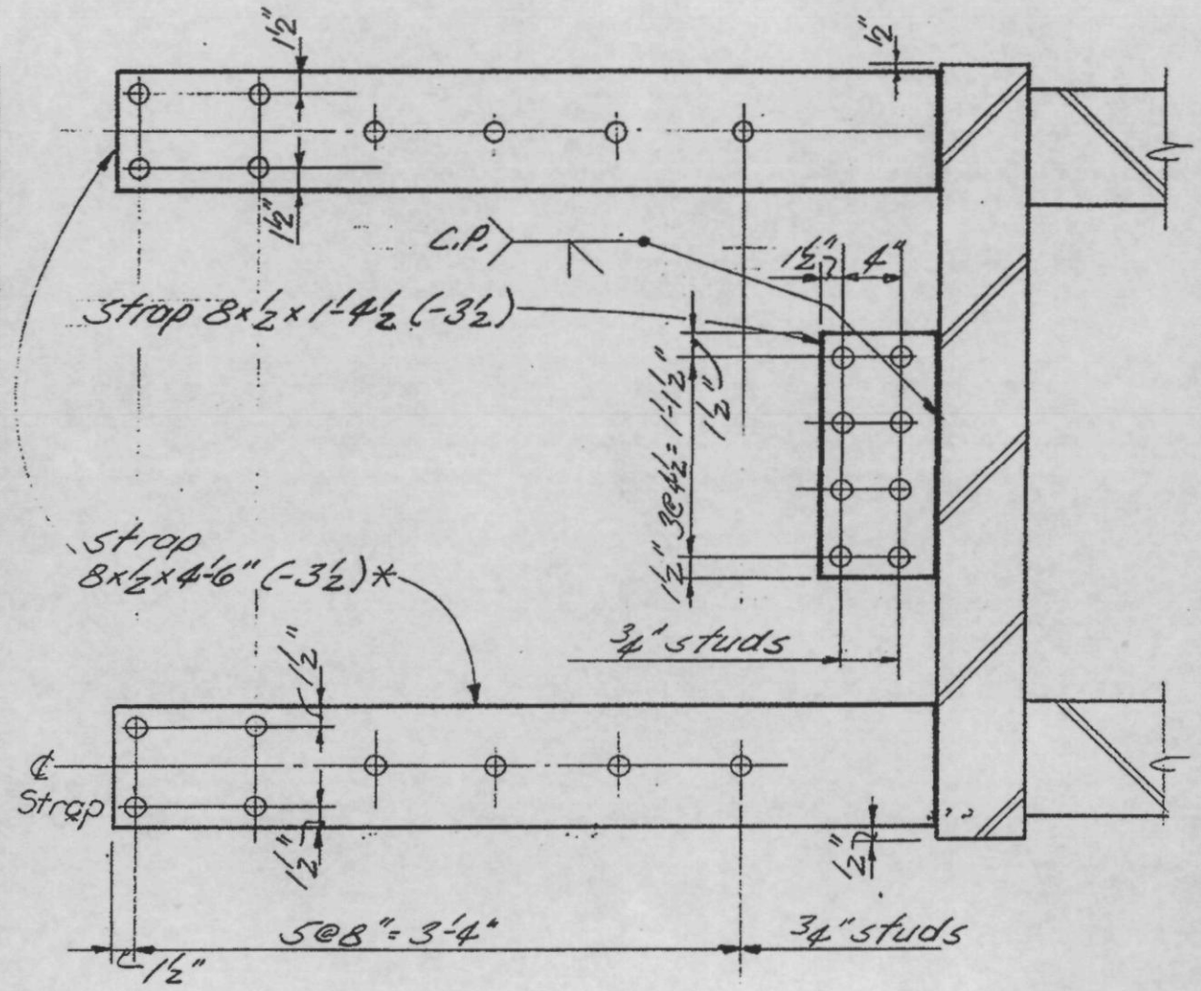

Detail 77B

* See Note 6
18-AB2-2

LICENSED PROFESSIONAL ENGINEER — LESLIE E. ROBERTSON — No. 34360 — UNIVERSITY OF THE STATE OF NEW YORK

DESIGNED

DRAWN
S. Adams

REVIEWED

18-AB2-77.1

SKILLING, HELLE, CHRISTIANSEN, ROBERTSON — Structural & Civil Engineers

PROJECT: THE WORLD TRADE CENTER | TITLE: STRAP ANCHOR - CORE - DETAIL 77 | DATE: 10-1-69

REVISIONS

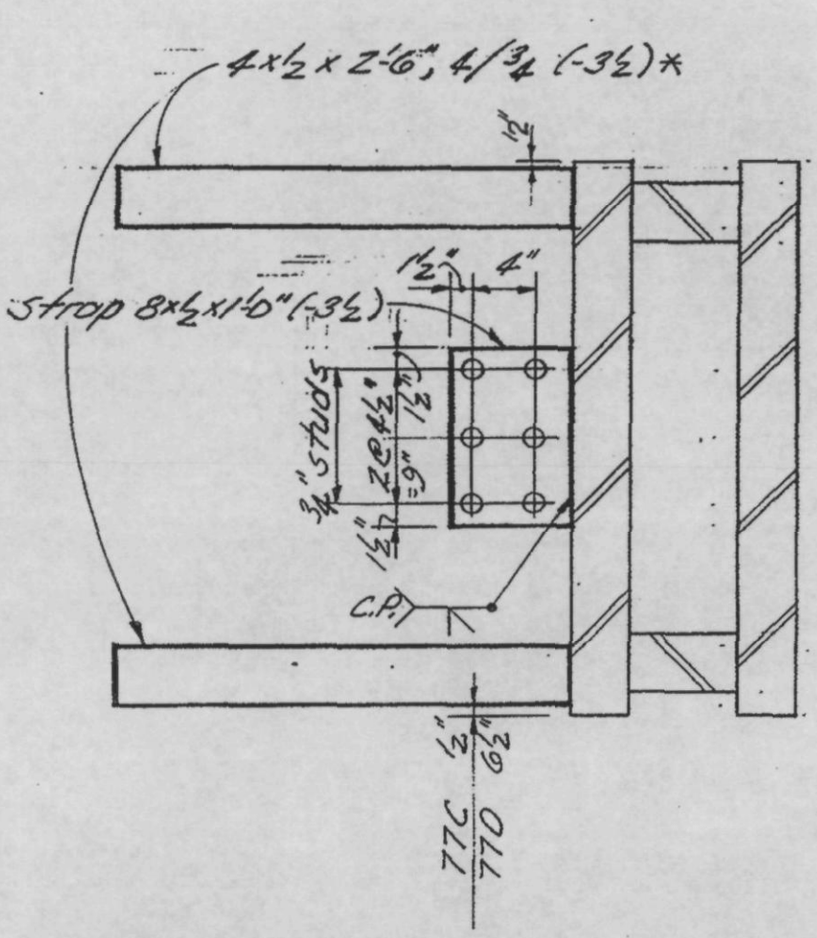

Details 77C and 77D

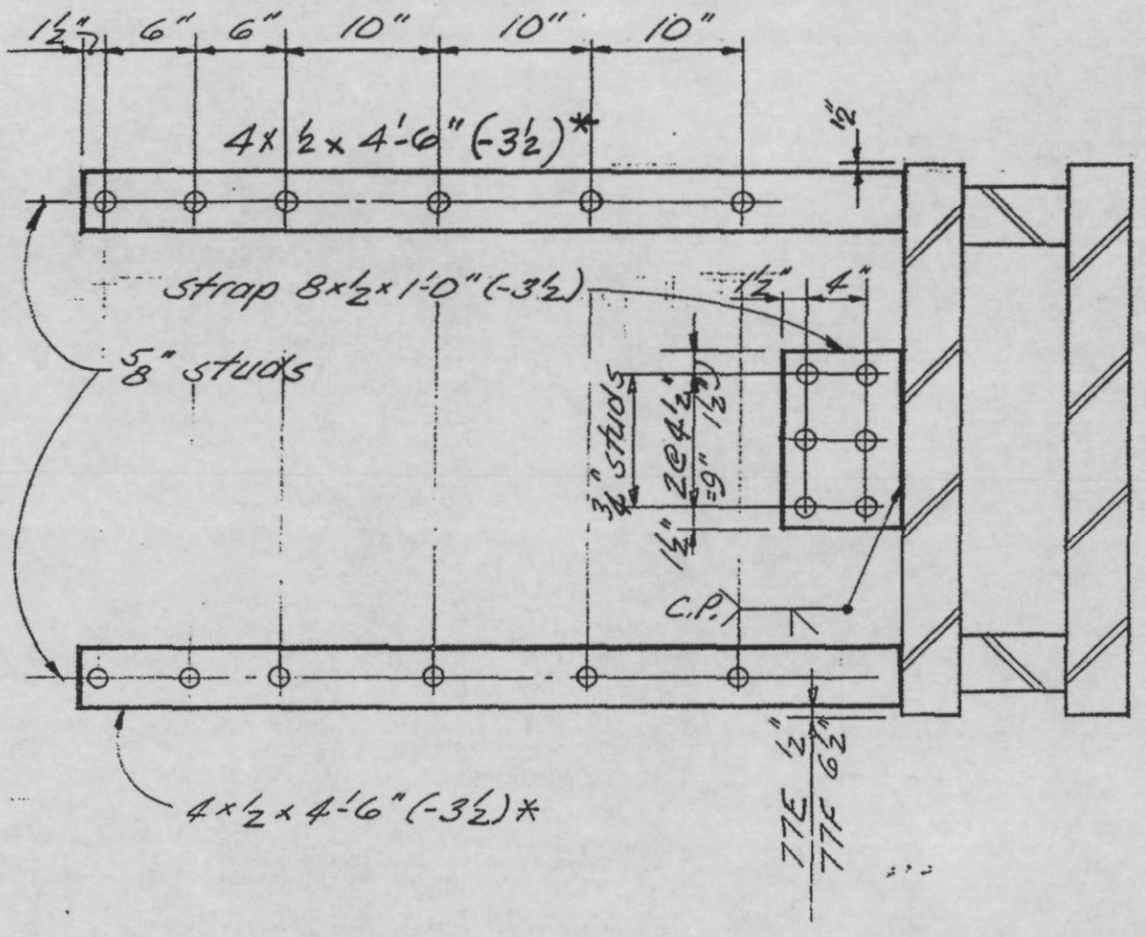

Details 77E and 77F

See Note 6
18-AB2-2

LICENSED PROFESSIONAL ENGINEER
LESLIE E. ROBERTSON
No. 34360
UNIVERSITY OF THE STATE OF NEW YORK

DESIGNED

DRAWN
Adams

REVIEWED

18-AB2-77.2

SKILLING, HELLE, CHRISTIANSEN, ROBERTSON — Structural & Civil Engineers

PROJECT: THE WORLD TRADE CENTER | TITLE: STRAP ANCHORS - CORE - DETAIL 78 | DATE: 10/1/69

REVISIONS

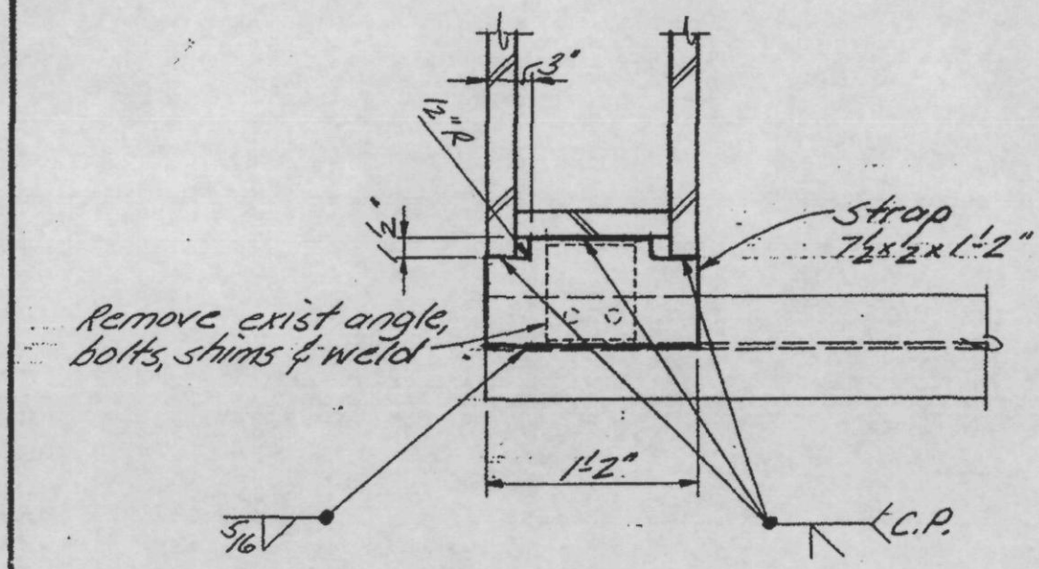

Detail 78A

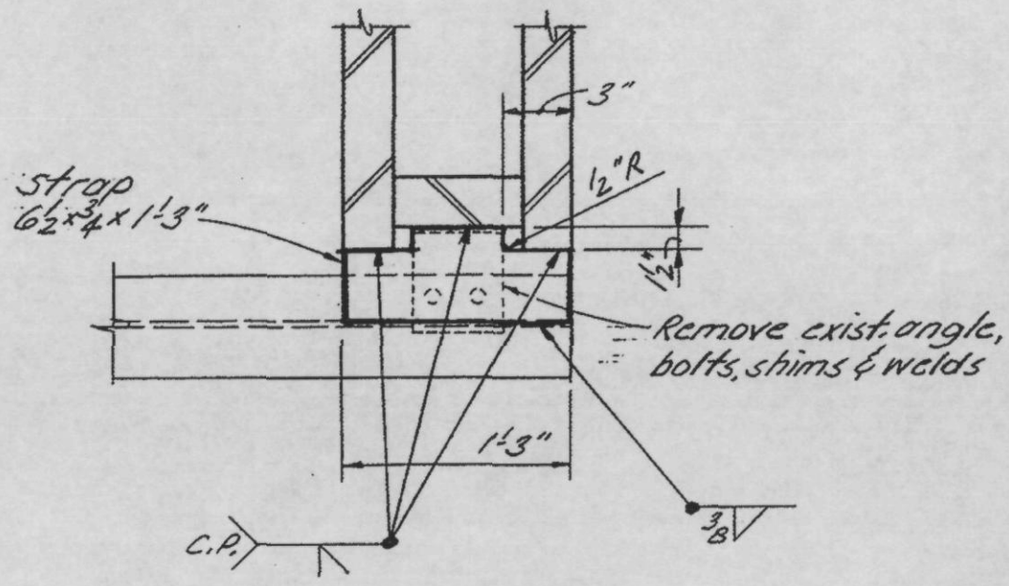

Detail 78B

LICENSED PROFESSIONAL ENGINEER
LESLIE E. ROBERTSON
No. 34360
UNIVERSITY OF THE STATE OF NEW YORK

DESIGNED

DRAWN
J. Hollis

REVIEWED

18-A82-78

SKILLING, HELLE, CHRISTIANSEN, ROBERTSON — Structural & Civil Engineers

PROJECT: THE WORLD TRADE CENTER | TITLE: STRAP ANCHORS - CORE - DETAIL 79 | DATE: 10-1-69

REVISIONS

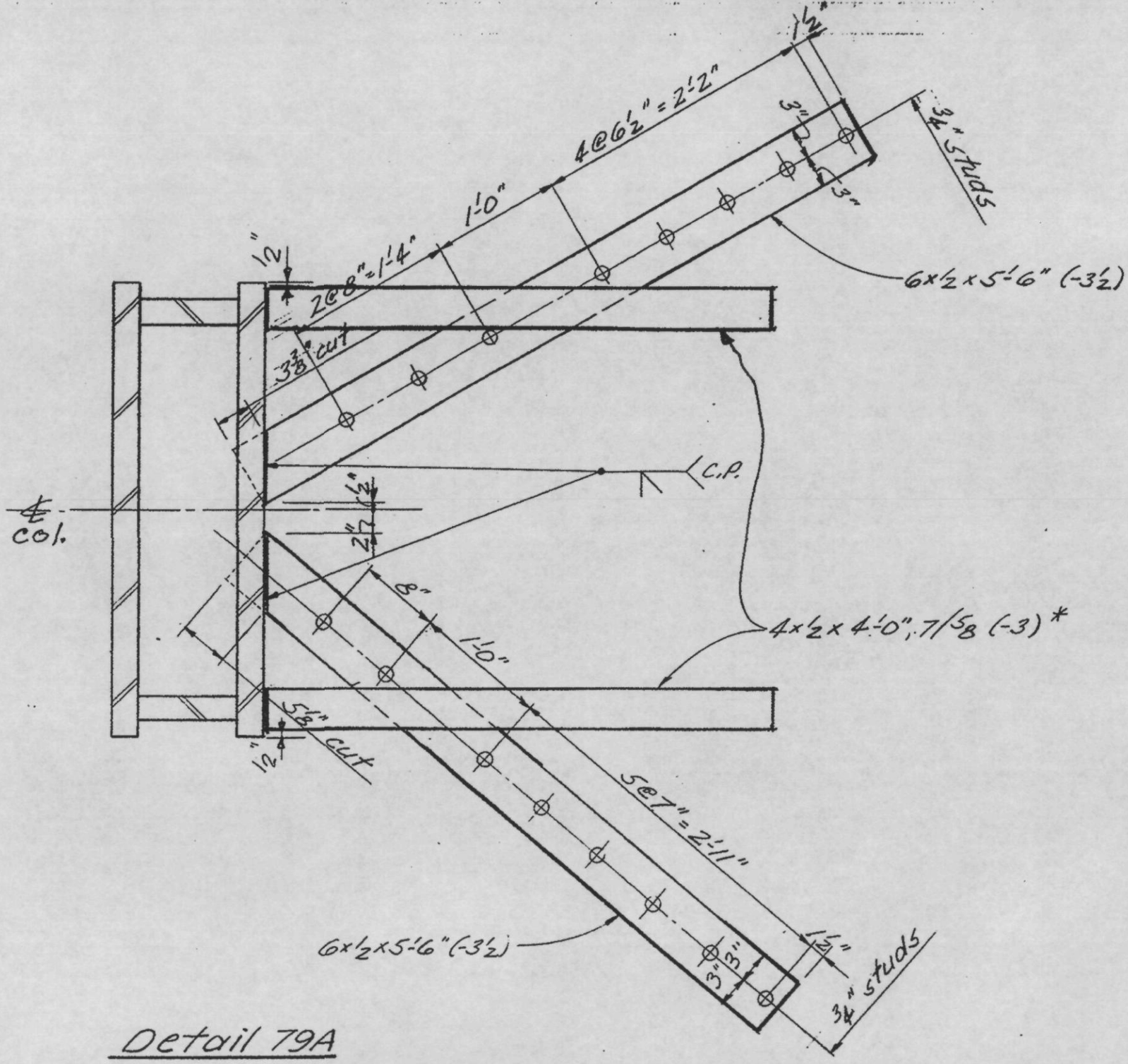

Detail 79A

* See Note 6, 18-ABZ-2.

LICENSED PROFESSIONAL ENGINEER — LESLIE E. ROBERTSON — No. 34360 — UNIVERSITY OF THE STATE OF NEW YORK

DESIGNED

DRAWN
Adams

REVIEWED

18-ABZ-79.1

SKILLING HELLE CHRISTIANSEN, ROBERTSON — Structural & Civil Engineers

PROJECT: THE WORLD TRADE CENTER | TITLE: STRAP ANCHORS - CORE - DETAIL 79 | DATE: 10-1-69

REVISIONS

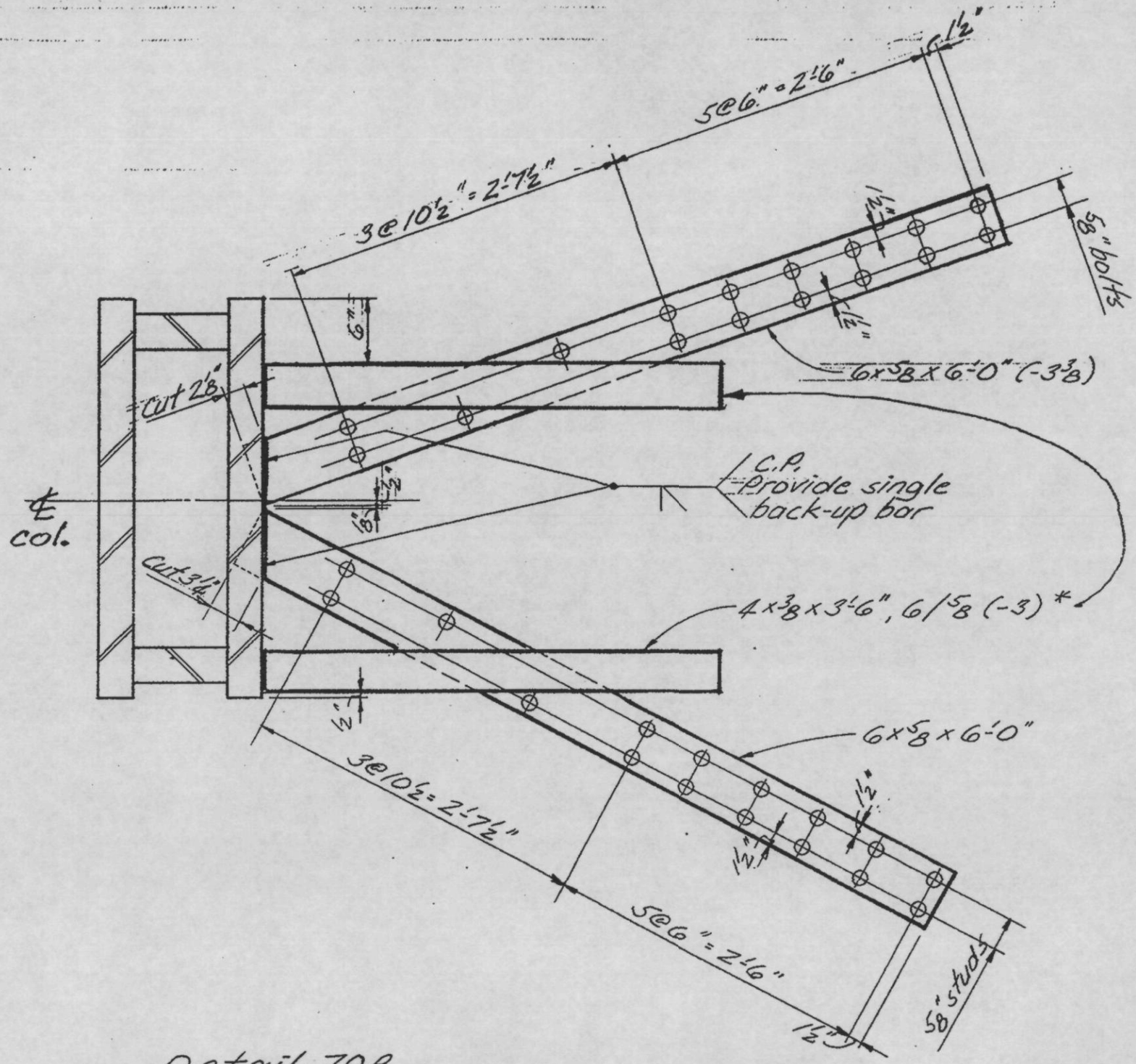

Detail 79B

*See Note 6, 18-ABZ-2

LICENSED PROFESSIONAL ENGINEER — LESLIE E. ROBERTSON — No. 34960 — UNIVERSITY OF THE STATE OF NEW YORK

DESIGNED

DRAWN J. Adams

REVIEWED

18-ABZ-79.2

SKILLING, HELLE, CHRISTIANSEN, ROBERTSON — Structural & Civil Engineers

PROJECT THE WORLD TRADE CENTER | TITLE STRAP ANCHORS - CORE - DETAIL BO | DATE 10-1-69

REVISIONS

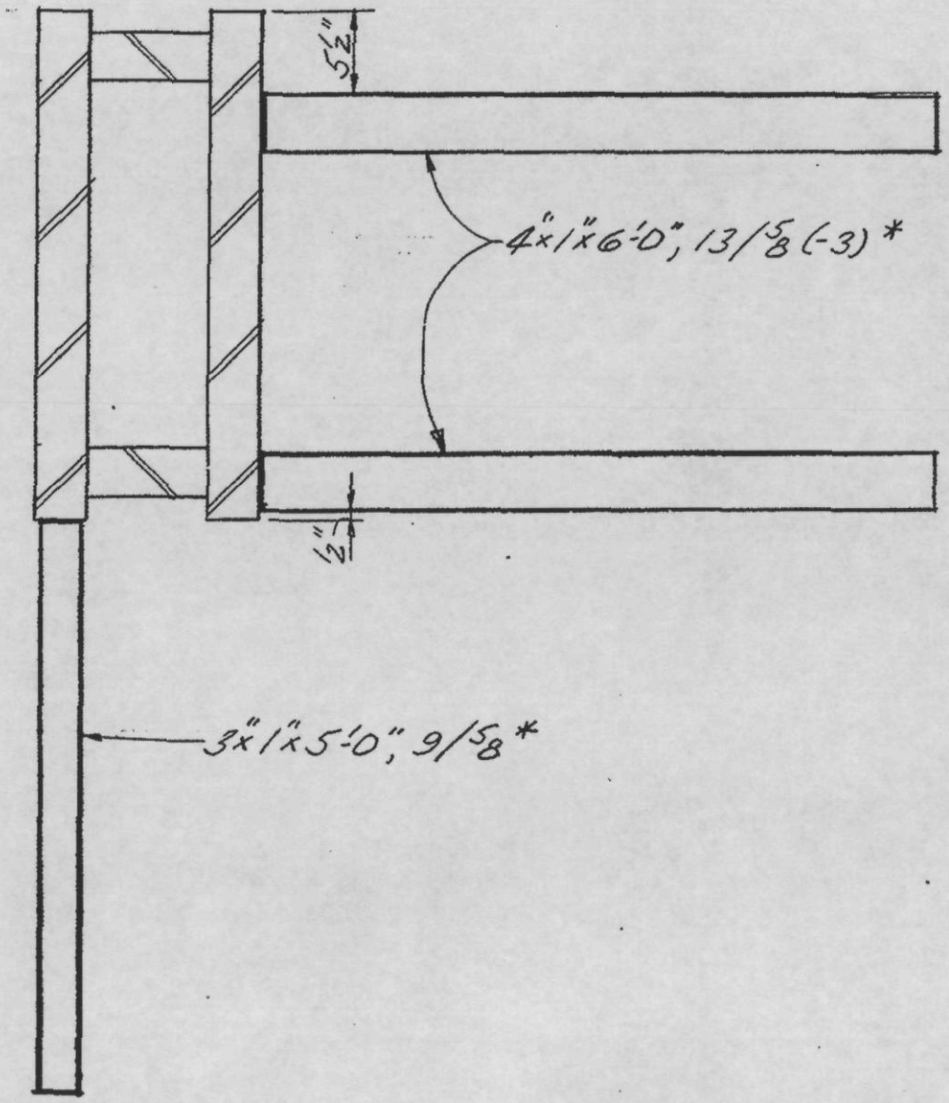

Detail BOA

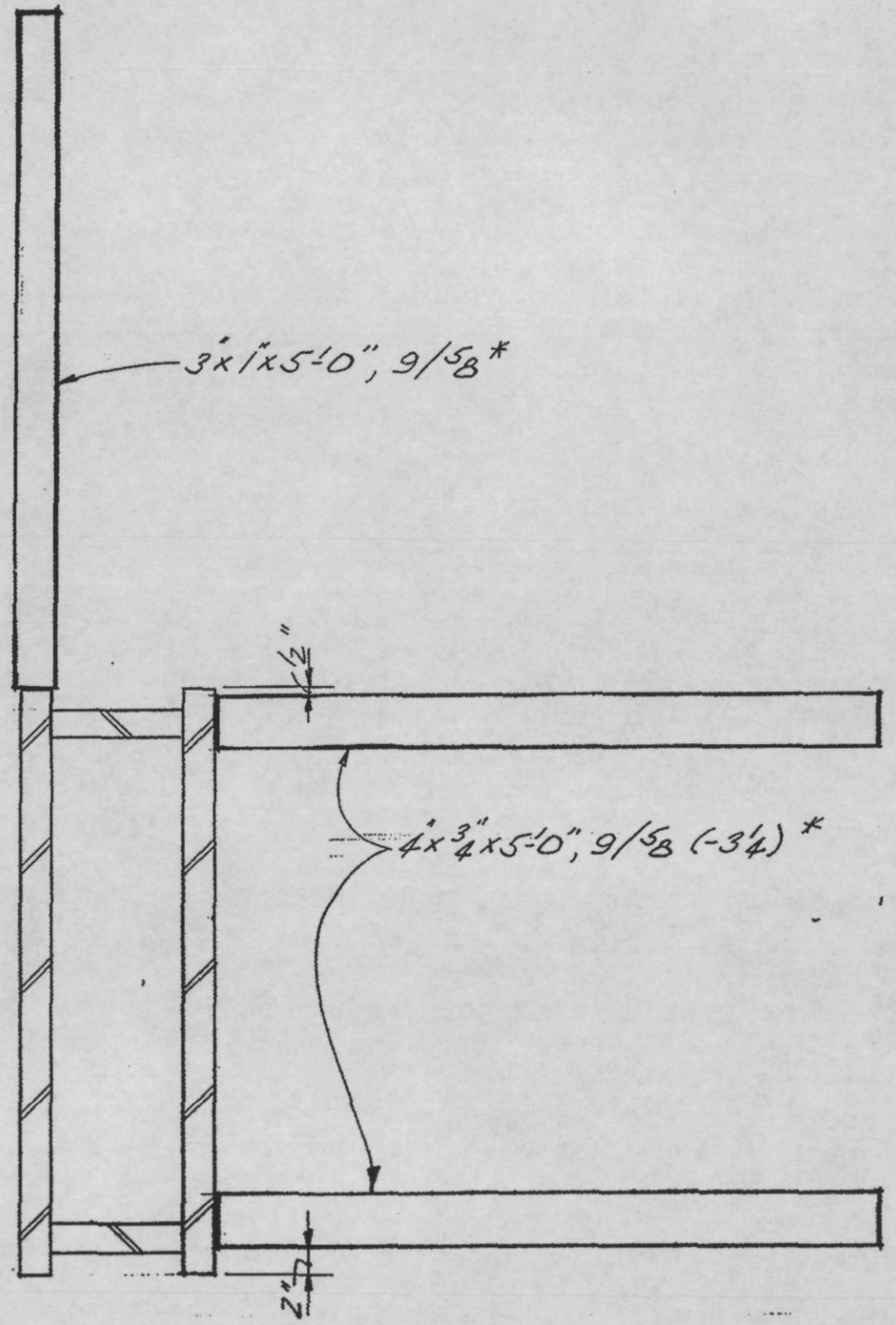

Detail BOB

*See Note 6, 18-AB2-2

LICENSED PROFESSIONAL ENGINEER
LESLIE E. ROBERTSON
No. 34360
UNIVERSITY OF THE STATE OF NEW YORK

DESIGNED

DRAWN J. Adams

REVIEWED

18-AB2-BO

SKILLING, HELLE, CHRISTIANSEN, ROBERTSON — Structural & Civil Engineers

PROJECT THE WORLD TRADE CENTER | TITLE STRAP ANCHORS - CORE - DETAIL 81 | DATE 10-1-69

REVISIONS

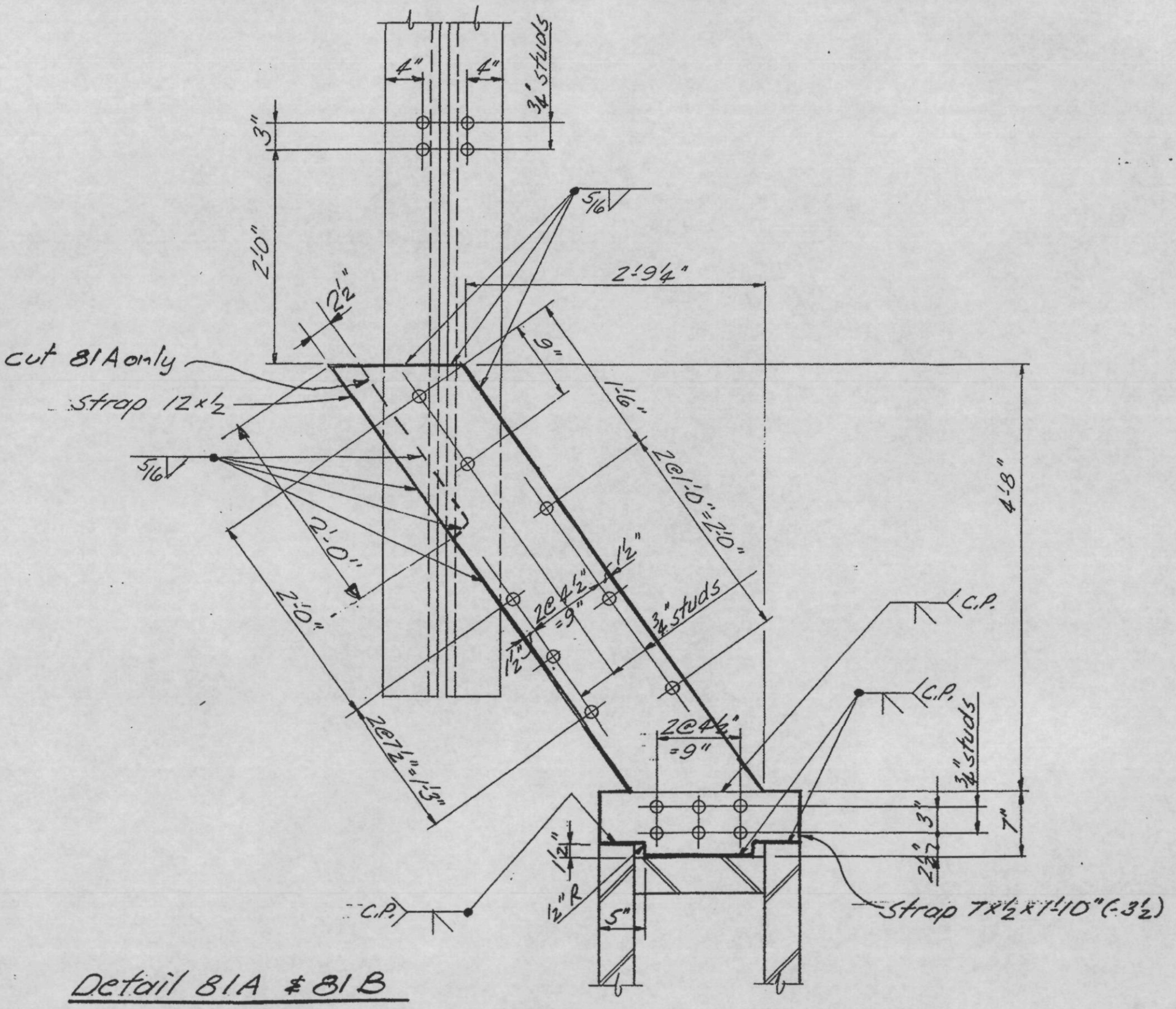

Detail 81A & 81B

LICENSED PROFESSIONAL ENGINEER
LESLIE E. ROBERTSON
No. 34860
UNIVERSITY OF THE STATE OF NEW YORK

DESIGNED

DRAWN
J. Adams

REVIEWED

18-AB2-81.1

SKILLING, HELLE, CHRISTIANSEN, ROBERTSON — Structural & Civil Engineers

PROJECT: THE WORLD TRADE CENTER | TITLE: STRAP ANCHORS - CORE - DETAIL B1 | DATE: 10-1-69

REVISIONS

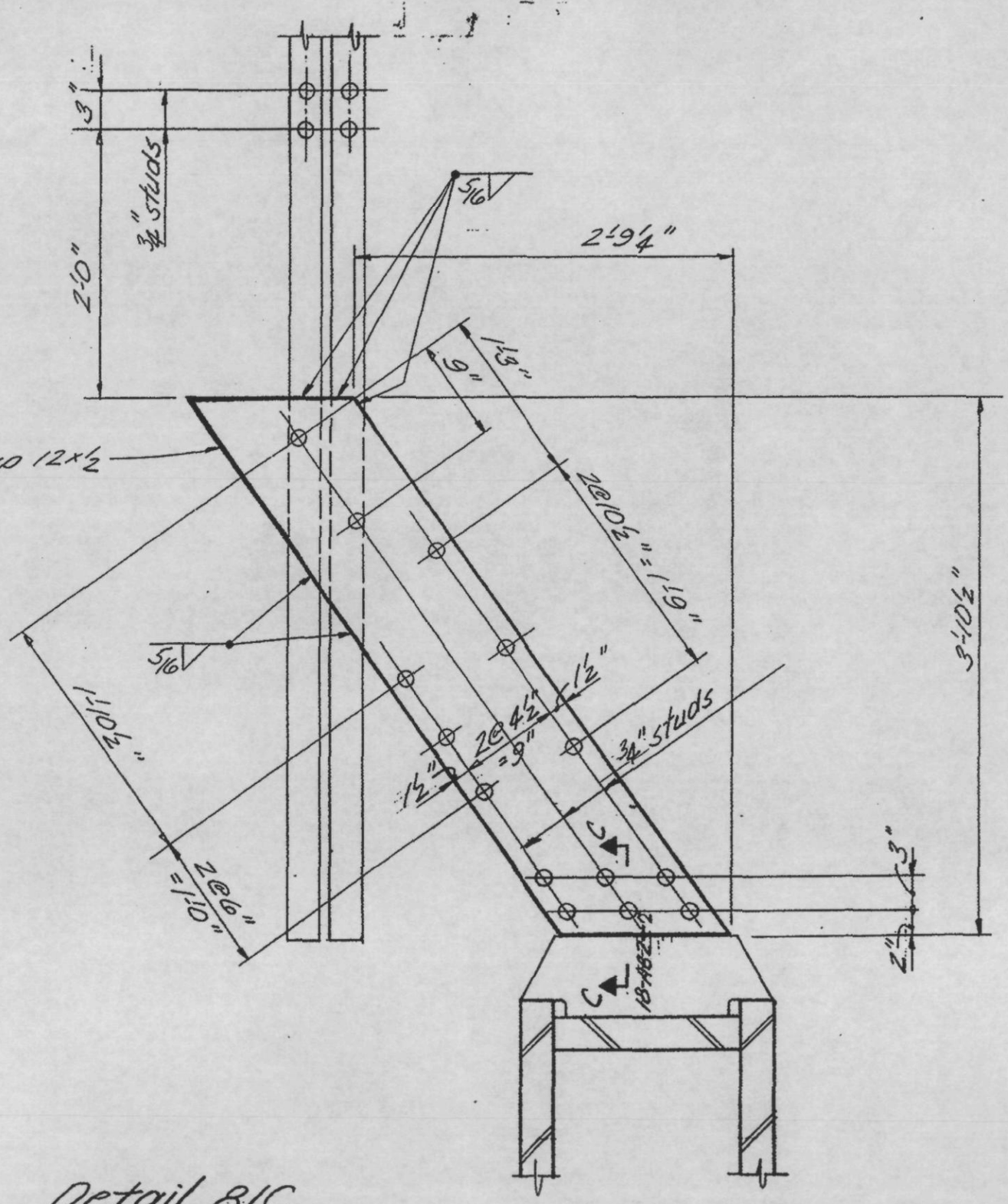

Detail B1C

LICENSED PROFESSIONAL ENGINEER
LESLIE E. ROBERTSON
No. 34360
UNIVERSITY OF THE STATE OF NEW YORK

DESIGNED

DRAWN
J. Adams

REVIEWED

18-AB2-B1.2

SKILLING, HELLE, CHRISTIANSEN, ROBERTSON — Structural & Civil Engineers

PROJECT	TITLE	DATE
THE WORLD TRADE CENTER	ANCHOR KEY PLANS - EXTERIOR WALL - INDEX	11/ 7/69

REVISIONS

18-AB3- 1	INDEX	
18-AB3- 2	FLOOR 7	
18-AB3- 3.1	FLOOR 9 TOWER A	
18-AB3- 3.2	FLOOR 9 TOWER B	
18-AB3- 4.1	FLOORS 10-24, 26-40, 50-58, 60-74, 84-91, 93-106 TOWER A	
18-AB3- 4.2	FLOORS 14-24, 26-40, 50-58, 60-74, 84-91, 93-106 TOWER B	
18-AB3- 4.3	FLOOR 10 TOWER B	
18-AB3- 4.4	FLOOR 11 TOWER B	
18-AB3- 4.5	FLOOR 12 TOWER B	
18-AB3- 4.6	FLOOR 13 TOWER B	
18-AB3- 5	FLOORS 25, 59, 92	
18-AB3- 6	FLOORS 41, 75	
18-AB3- 7.1	FLOOR 43 TOWER A	
18-AB3- 7.2	FLOOR 43 TOWER B	
18-AB3- 8.1	FLOOR 44 TOWER A	
18-AB3- 8.2	FLOOR 44 TOWER B	
18-AB3- 9	FLOOR 45	
18-AB3-10	FLOORS 46 - 49	
18-AB3-11	FLOOR 77	
18-AB3-12	FLOOR 78	
18-AB3-13	FLOOR 79	
18-AB3-14	FLOORS 80 - 83	
18-AB3-15	FLOOR 107	HOLD
18-AB3-16	FLOOR 108	HOLD
18-AB3-17	FLOOR 110	HOLD

LICENSED PROFESSIONAL ENGINEER
LESLIE E. ROBERTSON
No. 34360
UNIVERSITY OF THE STATE OF NEW YORK

SKILLING, HELLE, CHRISTIANSEN, ROBERTSON — Structural & Civil Engineers

PROJECT: THE WORLD TRADE CENTER

TITLE: ANCHOR PLATE KEY PLAN FLOOR 7

DATE: 2-7-69

REVISIONS

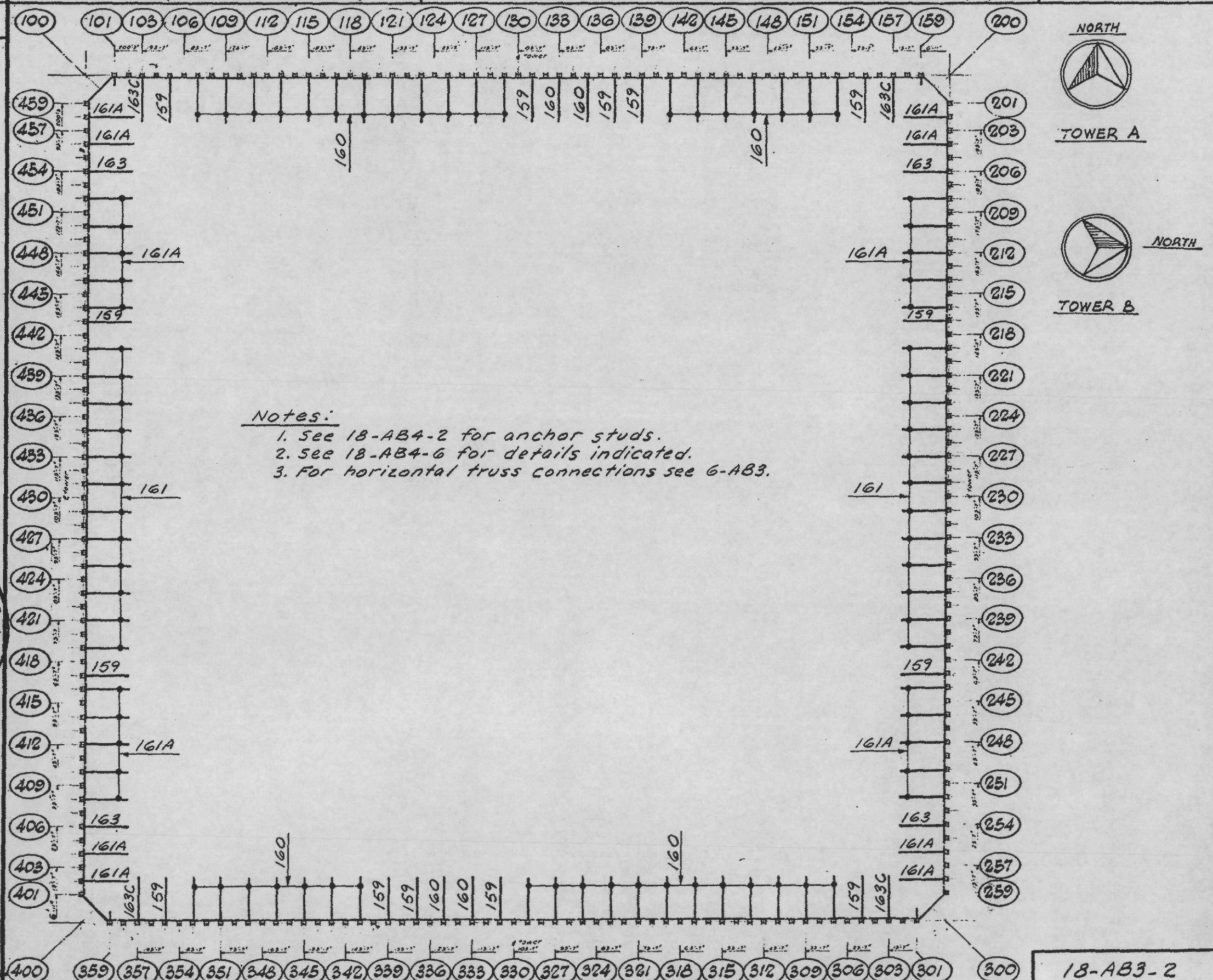

Notes:

1. See 18-AB4-2 for anchor studs.
2. See 18-AB4-6 for details indicated.
3. For horizontal truss connections see 6-AB3.

LICENSED PROFESSIONAL ENGINEER
LESLIE E. ROBERTSON
No. 34360
UNIVERSITY OF THE STATE OF NEW YORK

DESIGNED S. Karp

DRAWN A. Franqui

REVIEWED W. Brown

18-AB3-2

SKILLING, HELLE, CHRISTIANSEN, ROBERTSON — Structural & Civil Engineers

PROJECT: THE WORLD TRADE CENTER

TITLE: ANCHOR PLATE KEY PLAN FLOOR 9 TOWER A

DATE: 2-7-69

REVISIONS

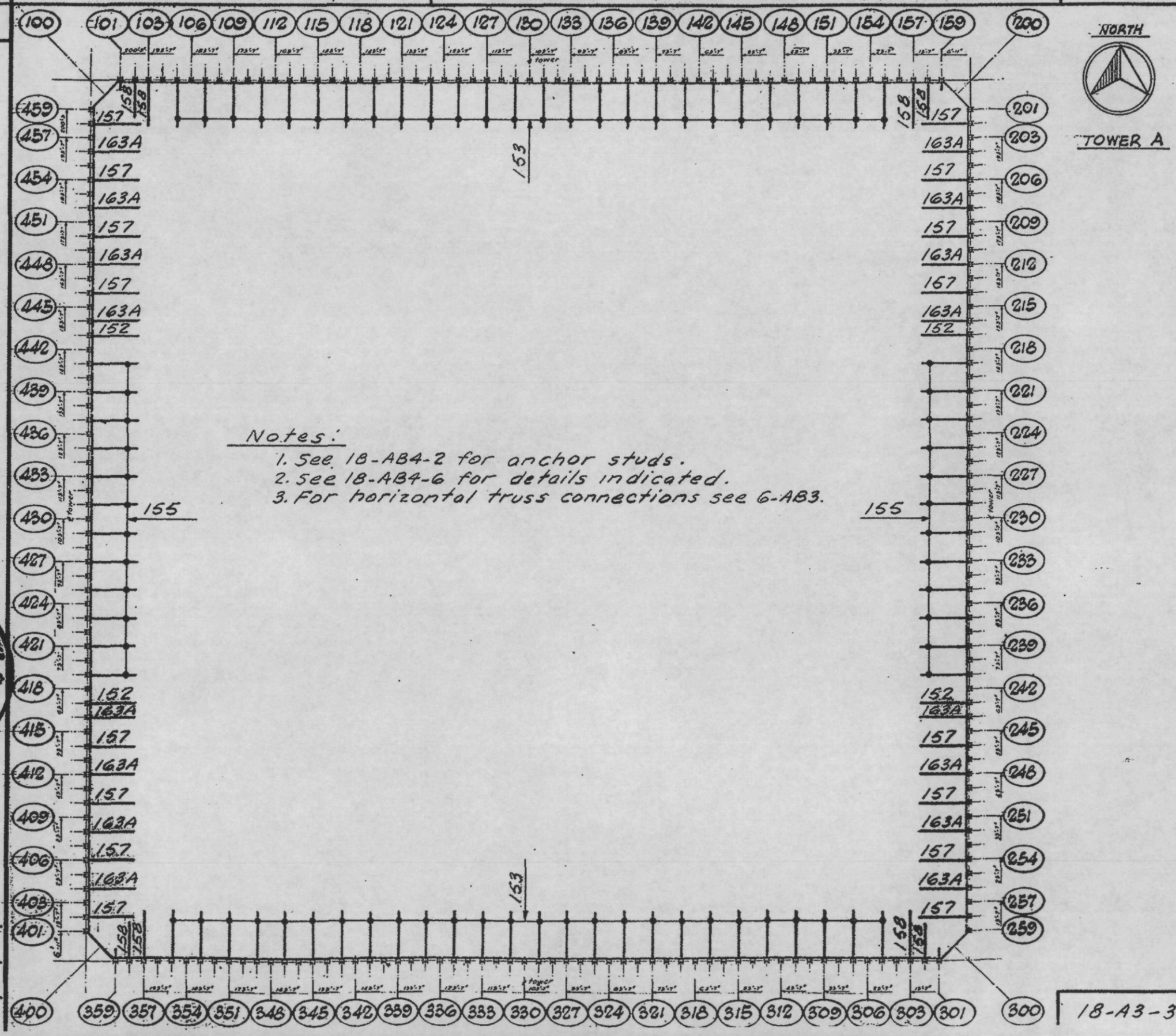

Notes:

1. See 18-AB4-2 for anchor studs.
2. See 18-AB4-6 for details indicated.
3. For horizontal truss connections see 6-AB3.

LICENSED PROFESSIONAL ENGINEER
LESLIE E. ROBERTSON
No. 34360
UNIVERSITY OF THE STATE OF NEW YORK

DESIGNED: S. Karp

DRAWN: A. Franqui

REVIEWED: W. Brewer

18-A3-3.1

SKILLING, HELLE, CHRISTIANSEN, ROBERTSON Structural & Civil Engineers

PROJECT THE WORLD TRADE CENTER | TITLE ANCHOR PLATE KEY PLAN FLOOR 9 TOWER B | DATE 2-7-69

REVISIONS

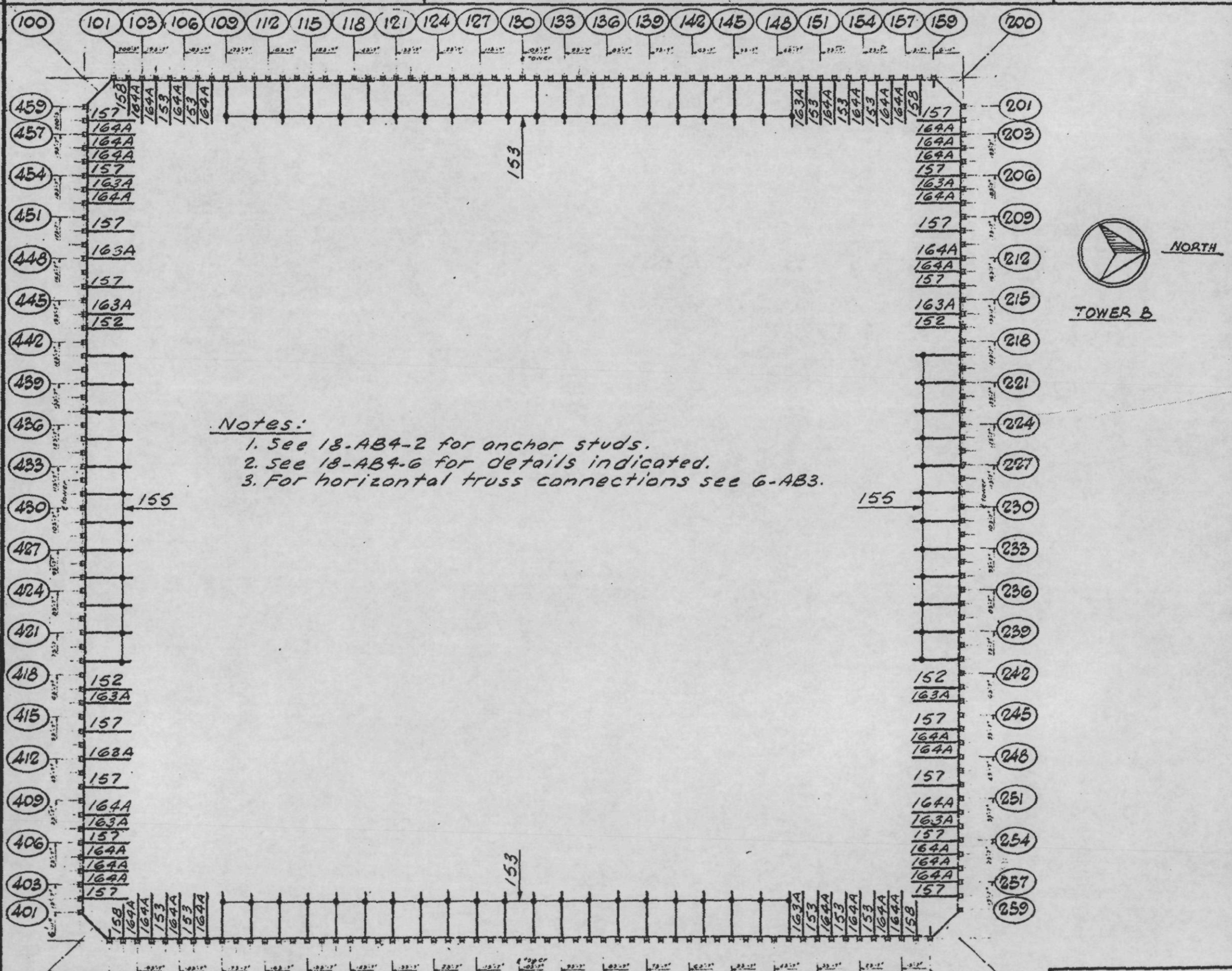

Notes:

1. See 18-AB4-2 for anchor studs.
2. See 18-AB4-6 for details indicated.
3. For horizontal truss connections see 6-AB3.

LICENSED PROFESSIONAL ENGINEER
LESLIE E. ROBERTSON
No. 34360
UNIVERSITY OF THE STATE OF NEW YORK

DESIGNED S. Karp
DRAWN A. Franqui
REVIEWED

SKILLING, HELLE, CHRISTIANSEN, ROBERTSON — Structural & Civil Engineers

PROJECT: THE WORLD TRADE CENTER

TITLE: ANCHOR PLATE KEY PLAN FLOORS TOWER B (See Table)

DATE: 2-7-69

REVISIONS

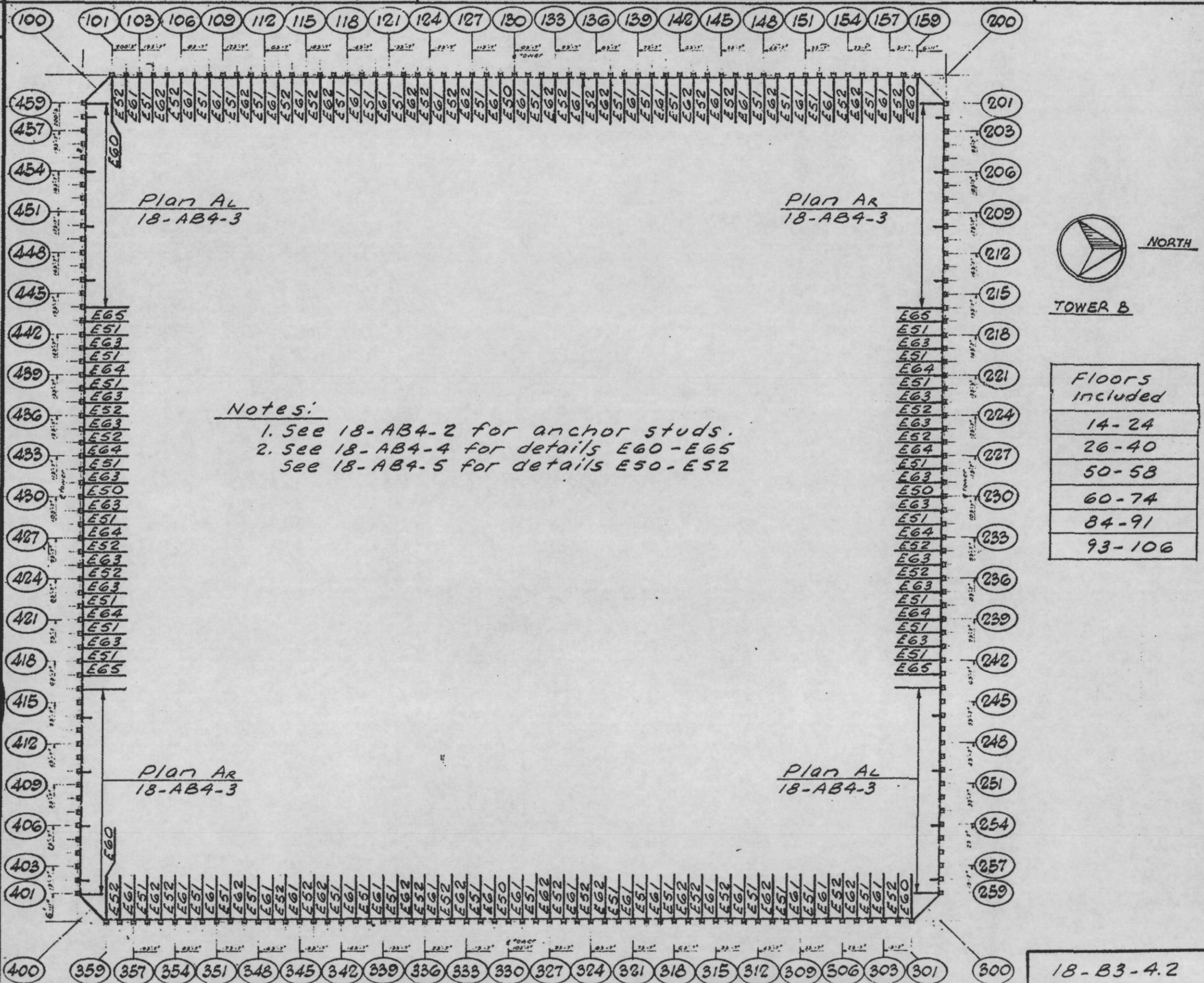

Notes:

1. See 18-AB4-2 for anchor studs.
2. See 18-AB4-4 for details E60-E65
   See 18-AB4-5 for details E50-E52

Floors Included
14-24
26-40
50-58
60-74
84-91
93-106

LICENSED PROFESSIONAL ENGINEER — LESLIE E. ROBERTSON — No. 34360 — UNIVERSITY OF THE STATE OF NEW YORK

SIGNED S. Karp

DRAWN A. Franqui

REVIEWED W. Brewer

18-B3-4.2

SKILLING, HELLE, CHRISTIANSEN, ROBERTSON — Structural & Civil Engineers

PROJECT: THE WORLD TRADE CENTER

TITLE: ANCHOR PLATE KEY PLAN 10TH FLOOR TOWER B

DATE: 11-7-69

REVISIONS

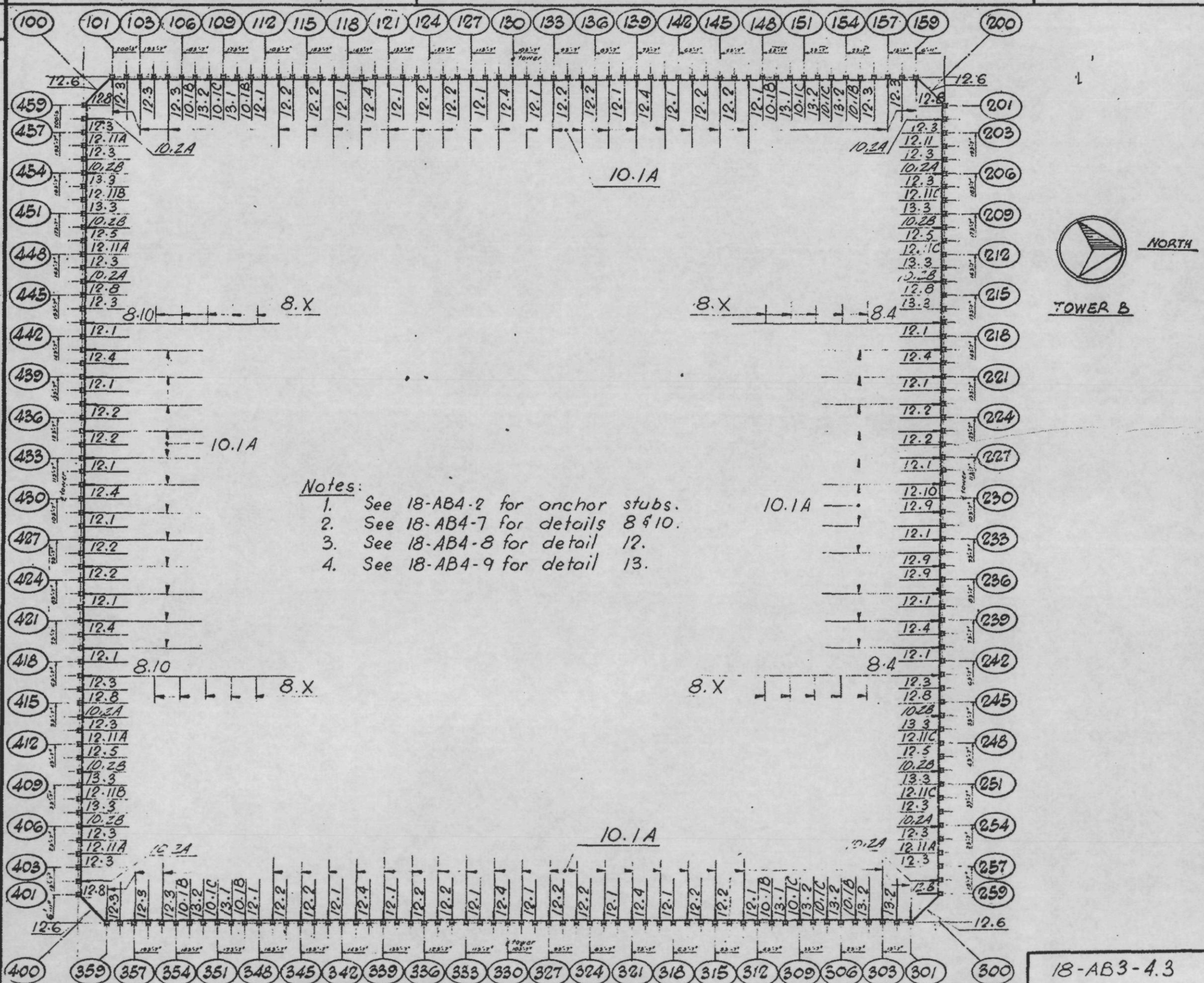

Notes:

1. See 18-AB4-2 for onchor stubs.
2. See 18-AB4-7 for details 8 & 10.
3. See 18-AB4-8 for detail 12.
4. See 18-AB4-9 for detail 13.

SIGNED

DRAWN F. Terrelonge

REVIEWED

18-AB3-4.3

SKILLING, HELLE, CHRISTIANSEN, ROBERTSON — Structural & Civil Engineers

PROJECT: THE WORLD TRADE CENTER

TITLE: ANCHOR PLATE KEY PLAN 11TH FLOOR TOWER 'B'

DATE: 11-7-69

VISIONS

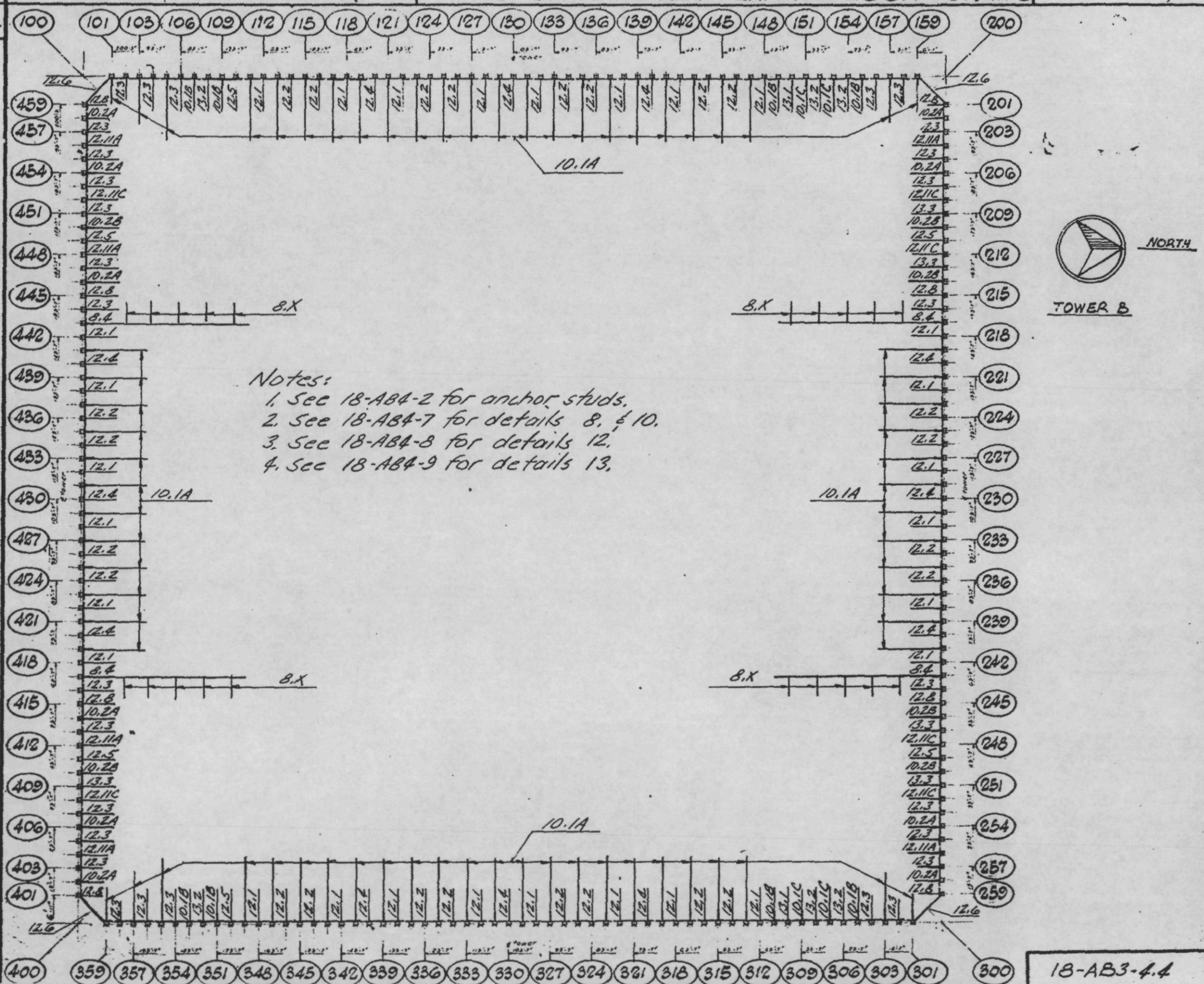

Notes:

1. See 18-AB4-2 for anchor studs.
2. See 18-AB4-7 for details 8. & 10.
3. See 18-AB4-8 for details 12.
4. See 18-AB4-9 for details 13.

DESIGNED

DRAWN

REVIEWED

18-AB3-4.4

SKILLING, HELLE, CHRISTIANSEN, ROBERTSON — Structural & Civil Engineers

PROJECT: THE WORLD TRADE CENTER

TITLE: ANCHOR PLATE KEY PLAN 12TH FLOOR TOWER "B"

DATE: 11-7-69

REVISIONS

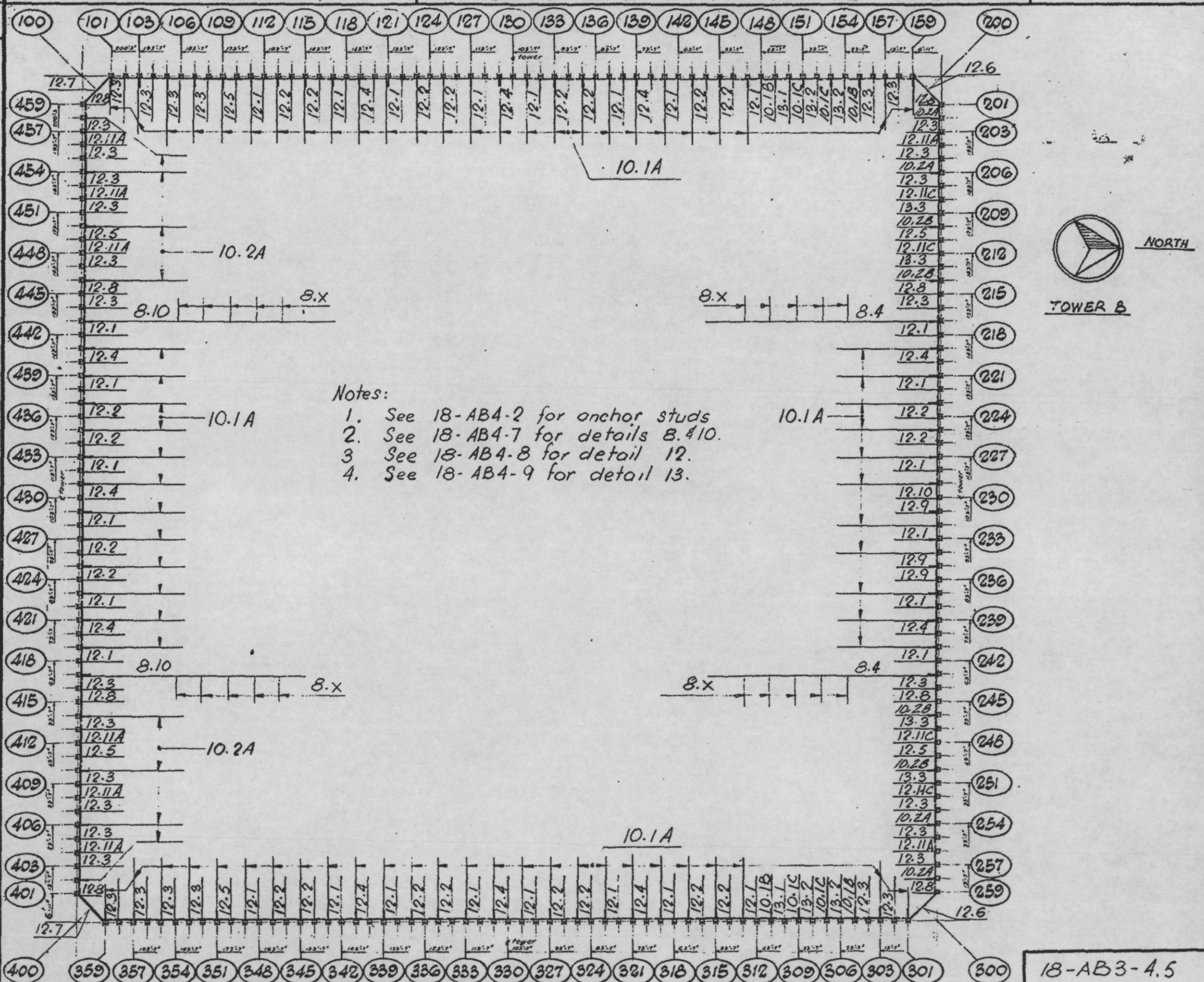

Notes:

1. See 18-AB4-2 for anchor studs
2. See 18-AB4-7 for details 8.410.
3. See 18-AB4-8 for detail 12.
4. See 18-AB4-9 for detail 13.

DESIGNED

DRAWN T. Terrelonge

REVIEWED

18-AB3-4.5

SKILLING, HELLE, CHRISTIANSEN, ROBERTSON — Structural & Civil Engineers

PROJECT THE WORLD TRADE CENTER | TITLE ANCHOR PLATE KEY PLAN 13TH FLOOR TOWER "B" | DATE 11-7-69

REVISIONS

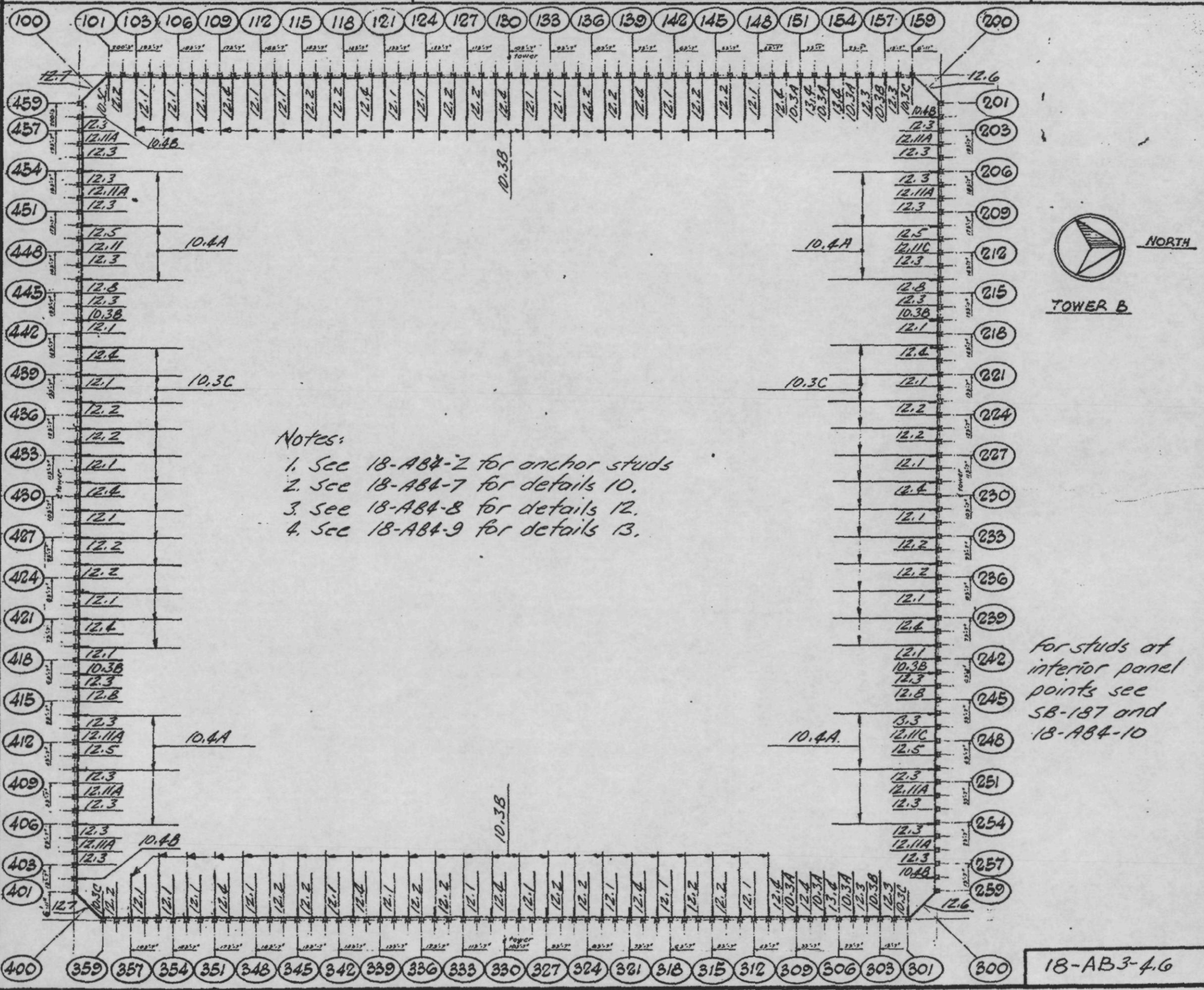

Notes:

1. See 18-AB4-2 for anchor studs
2. See 18-AB4-7 for details 10.
3. See 18-AB4-8 for details 12.
4. See 18-AB4-9 for details 13.

for studs at interior panel points see SB-187 and 18-AB4-10

SIGNED

DRAWN

REVIEWED

18-AB3-4.6

SKILLING, HELLE, CHRISTIANSEN, ROBERTSON — Structural & Civil Engineers

PROJECT: THE WORLD TRADE CENTER

TITLE: ANCHOR PLATE KEY PLAN FLOORS 25, 59, 92

DATE: 2-7-69

REVISIONS

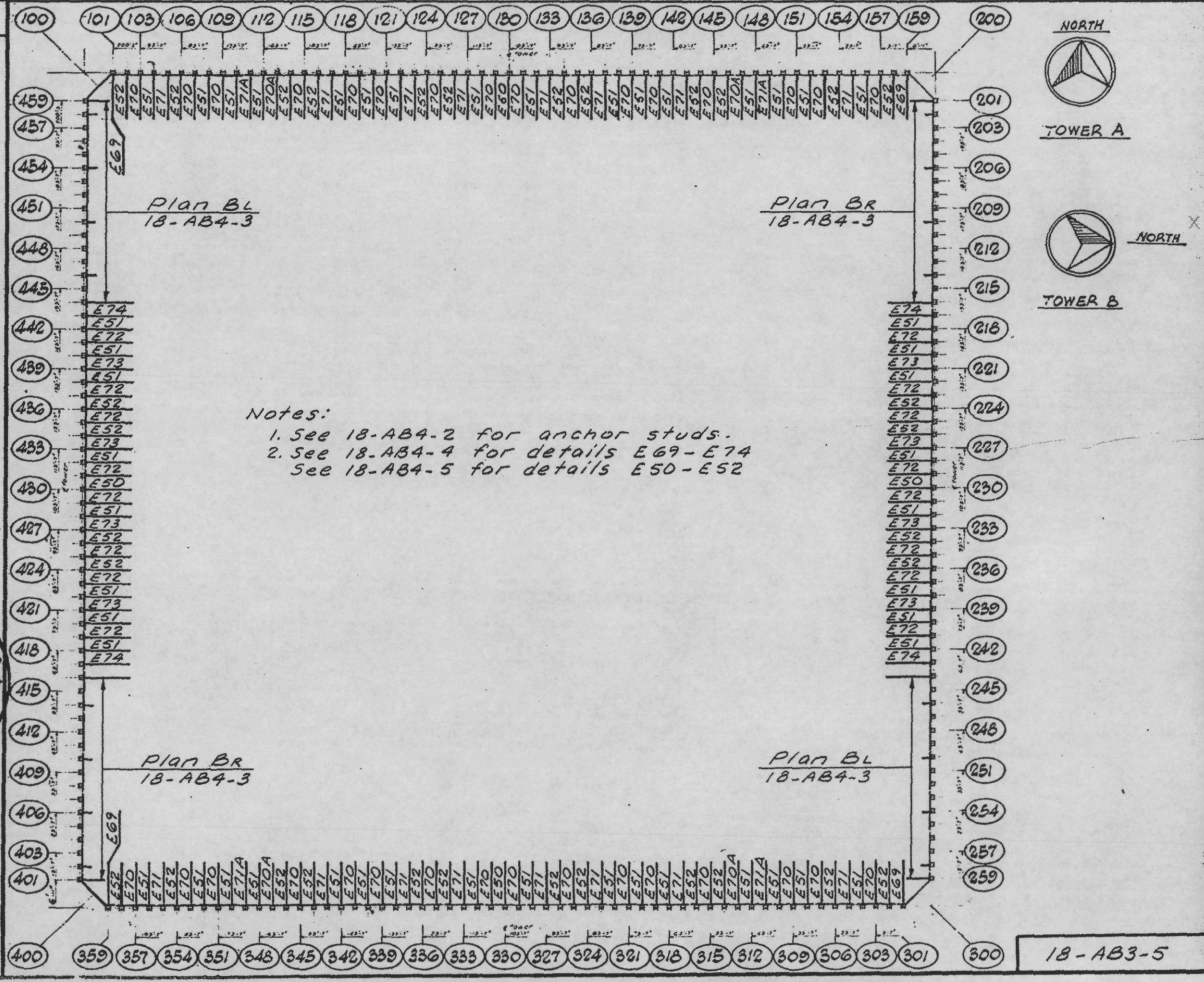

Notes:

1. See 18-AB4-2 for anchor studs.
2. See 18-AB4-4 for details E69 - E74
   See 18-AB4-5 for details E50 - E52

LICENSED PROFESSIONAL ENGINEER
LESLIE E. ROBERTSON
No. 34360
UNIVERSITY OF THE STATE OF NEW YORK

DESIGNED: J. Karp

DRAWN: A Frangui

REVIEWED: W. Brewer

18-AB3-5

SKILLING, HELLE, CHRISTIANSEN, ROBERTSON — Structural & Civil Engineers

PROJECT: THE WORLD TRADE CENTER

TITLE: ANCHOR PLATE KEY PLAN FLOORS 41, 75

DATE: 2-7-69

REVISIONS

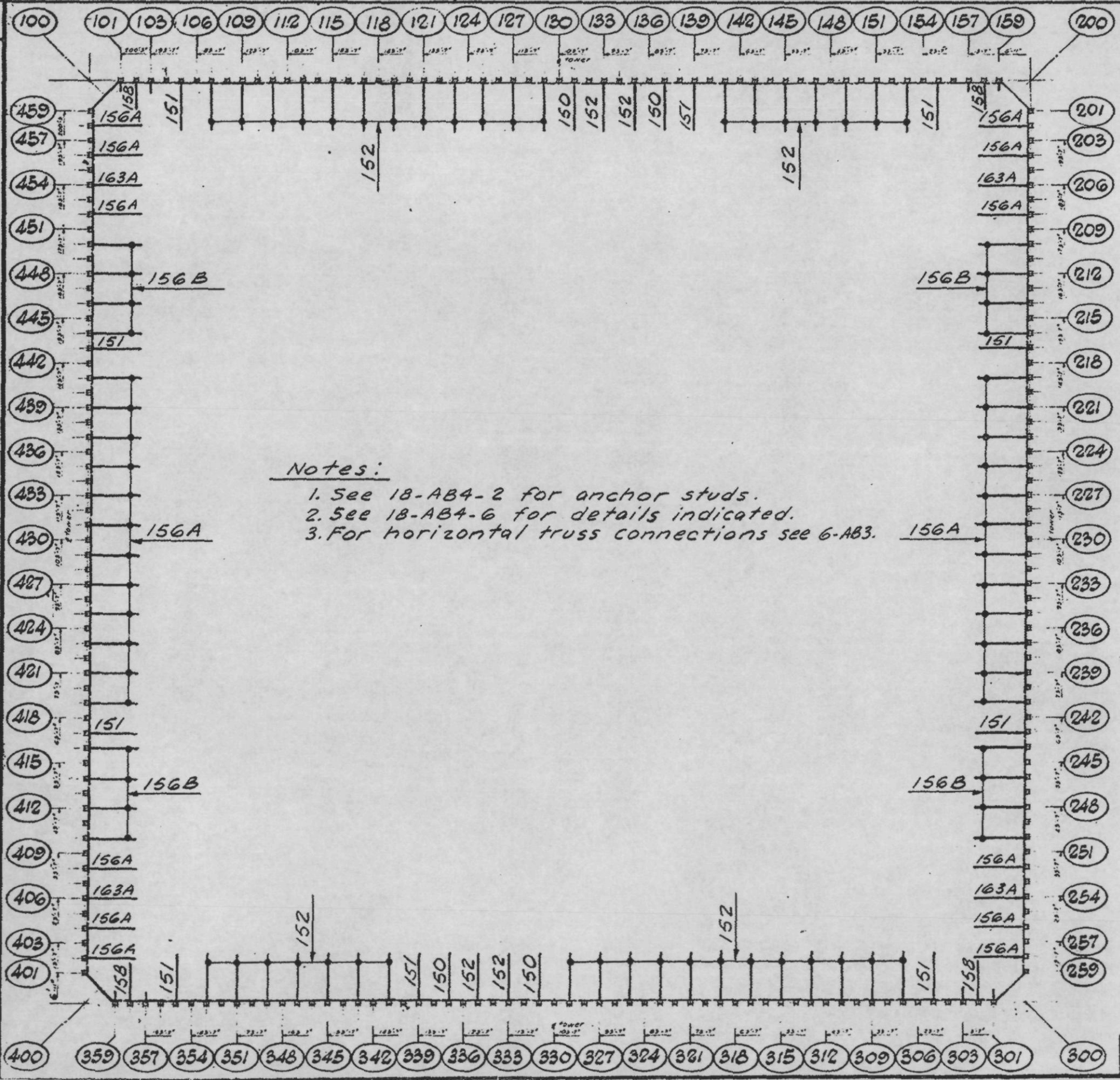

Notes:

1. See 18-AB4-2 for anchor studs.
2. See 18-AB4-6 for details indicated.
3. For horizontal truss connections see 6-AB3.

LICENSED PROFESSIONAL ENGINEER
LESLIE E. ROBERTSON
No. 34360
UNIVERSITY OF THE STATE OF NEW YORK

SIGNED S. Karp.

DRAWN A. Frangui

REVIEWED W. Brewer

18-AB3-6

SKILLING, HELLE, CHRISTIANSEN, ROBERTSON — Structural & Civil Engineers

PROJECT: THE WORLD TRADE CENTER

TITLE: ANCHOR PLATE KEY PLAN FLOOR 43 TOWER A

DATE: 2-7-69

REVISIONS

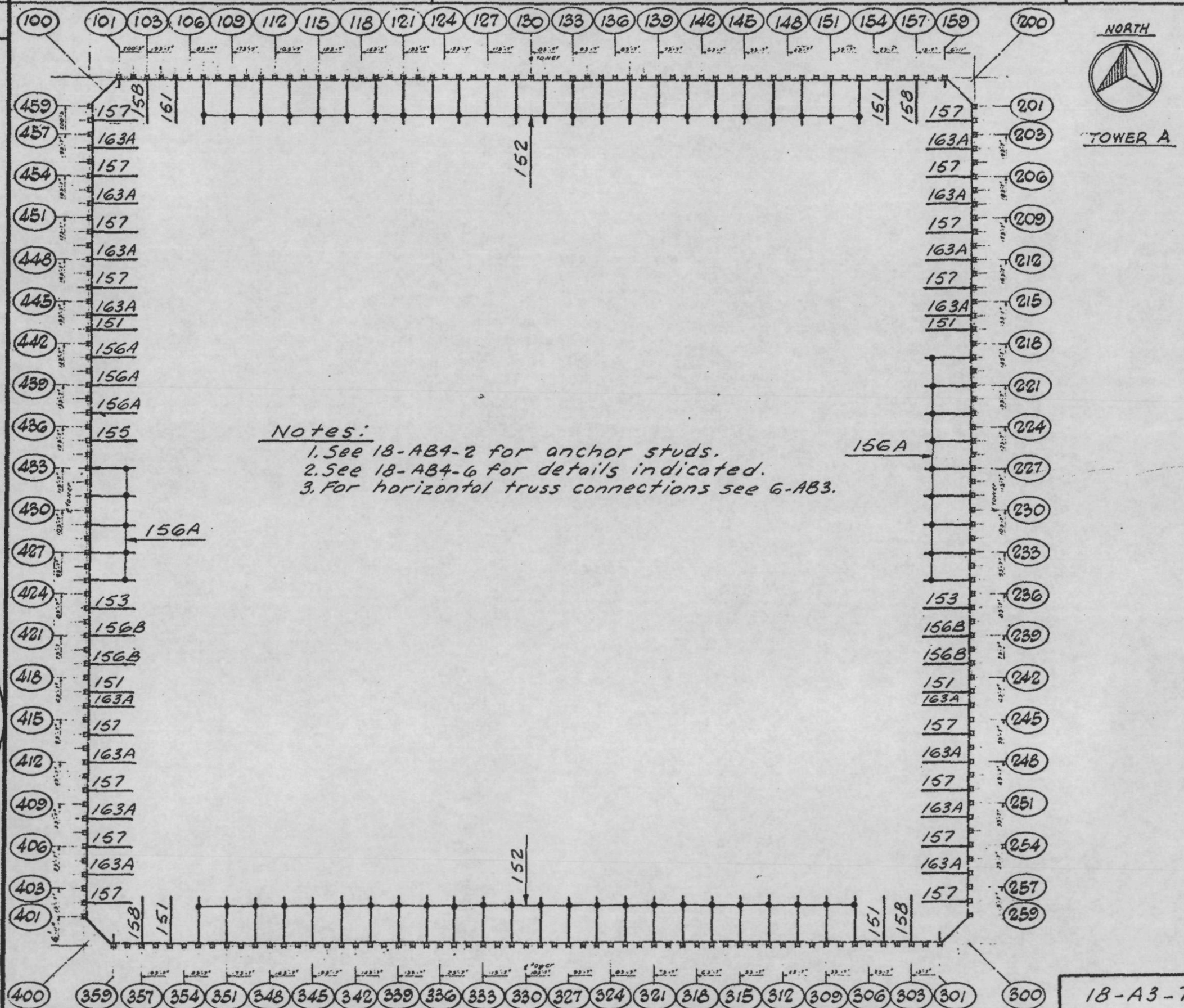

Notes:
1. See 18-AB4-2 for anchor studs.
2. See 18-AB4-6 for details indicated.
3. For horizontal truss connections see 6-AB3.

LICENSED PROFESSIONAL ENGINEER
LESLIE E. ROBERTSON
No. 34360
UNIVERSITY OF THE STATE OF NEW YORK

DESIGNED: S. Karp

DRAWN: A. Franqui

REVIEWED: W. Brewer

18-A3-7.1

SKILLING, HELLE, CHRISTIANSEN, ROBERTSON — Structural & Civil Engineers

PROJECT: THE WORLD TRADE CENTER

TITLE: ANCHOR PLATE KEY PLAN FLOOR 43 TOWER B

DATE: 2-7-69

VISIONS

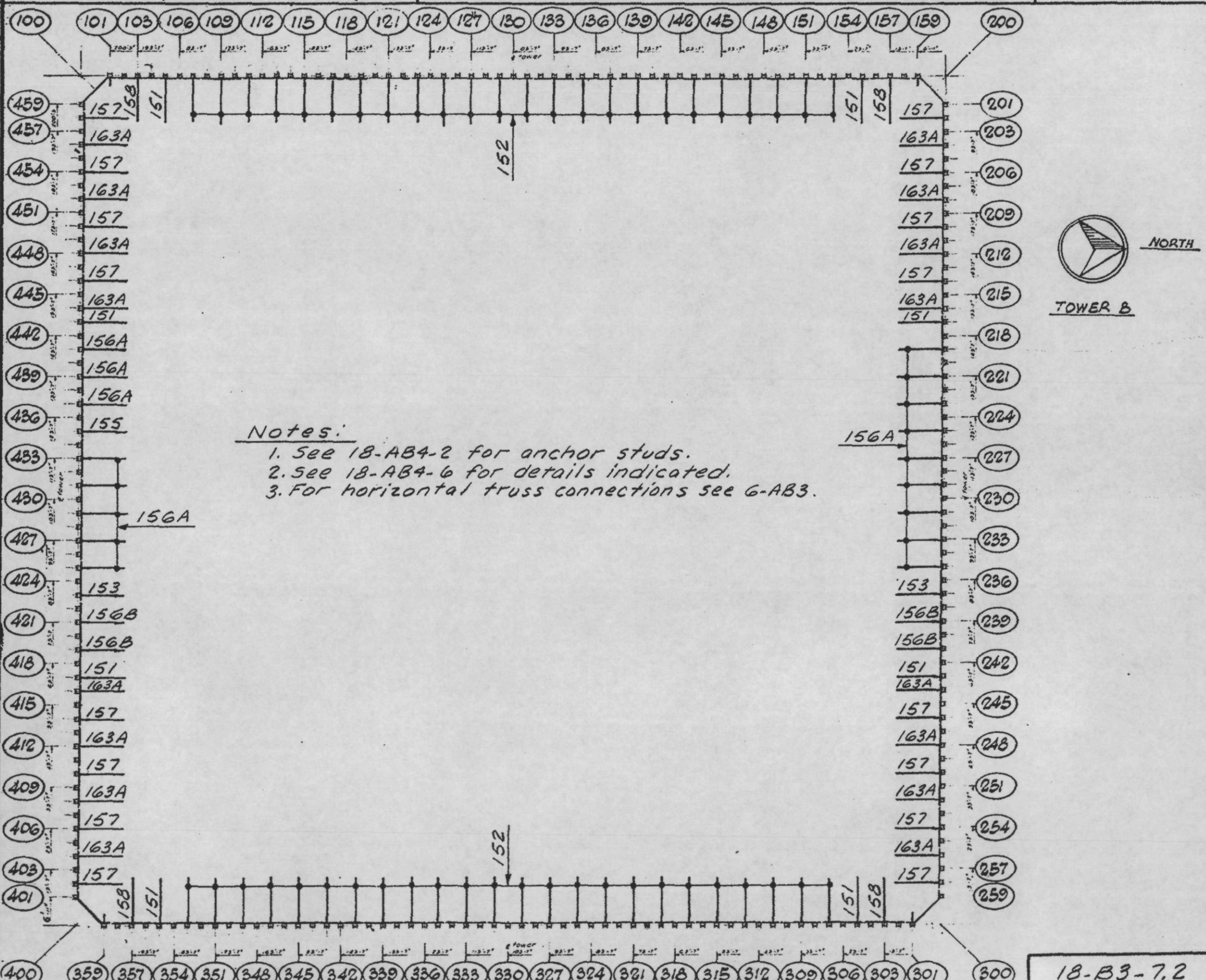

Notes:

1. See 18-AB4-2 for anchor studs.
2. See 18-AB4-6 for details indicated.
3. For horizontal truss connections see 6-AB3.

LICENSED PROFESSIONAL ENGINEER — LESLIE E. ROBERTSON — No. 34360 — UNIVERSITY OF THE STATE OF NEW YORK

DESIGNED S. Karp

DRAWN A. Franqui

REVIEWED L. E. Robertson

18-B3-7.2

SKILLING, HELLE, CHRISTIANSEN, ROBERTSON — Structural & Civil Engineers

PROJECT: THE WORLD TRADE CENTER

TITLE: ANCHOR PLATE KEY PLAN FLOOR 44 TOWER A

DATE

REVISIONS

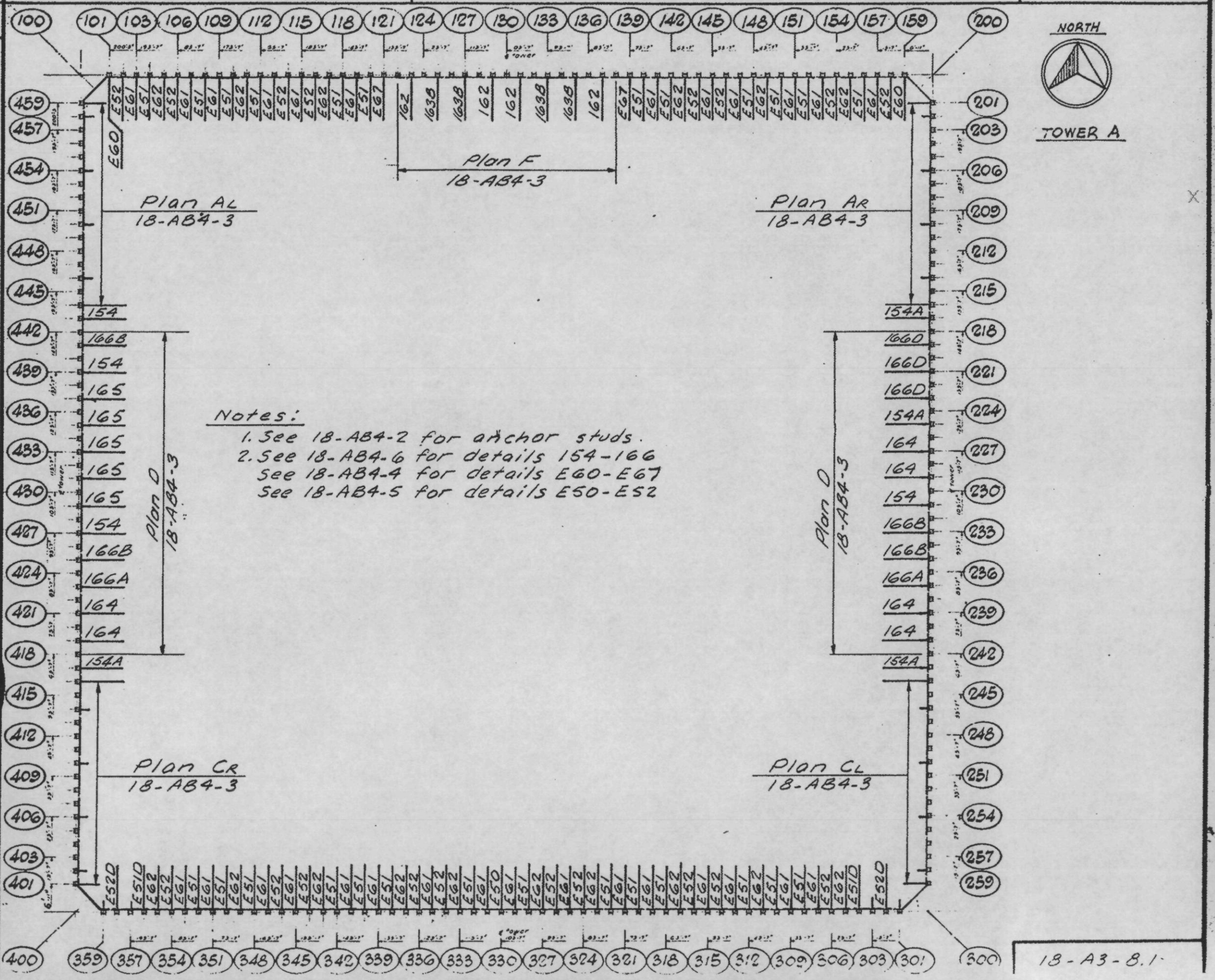

LICENSED PROFESSIONAL ENGINEER
LESLIE E. ROBERTSON
No. 34360
UNIVERSITY OF THE STATE OF NEW YORK

DESIGNED S Karp

DRAWN A Franqui

REVIEWED M. Brewer

18-A3-8.1

SKILLING, HELLE, CHRISTIANSEN, ROBERTSON — Structural & Civil Engineers

PROJECT: THE WORLD TRADE CENTER

TITLE: ANCHOR PLATE KEY PLAN FLOOR 44 TOWER B

DATE: 2-7-69

REVISIONS

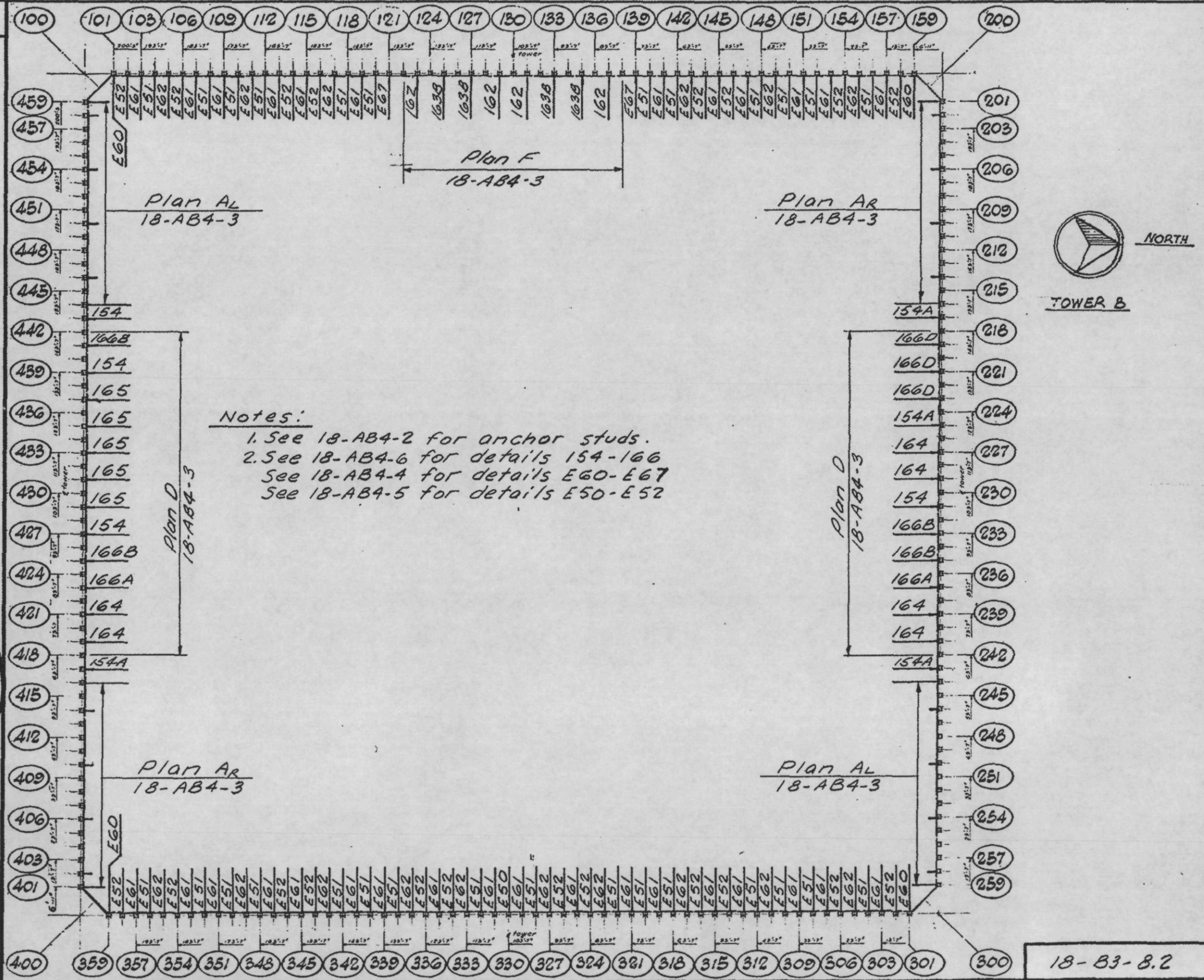

Notes:

1. See 18-AB4-2 for anchor studs.
2. See 18-AB4-6 for details 154-166
   See 18-AB4-4 for details E60-E67
   See 18-AB4-5 for details E50-E52

LICENSED PROFESSIONAL ENGINEER
LESLIE E. ROBERTSON
No. 34360
UNIVERSITY OF THE STATE OF NEW YORK

SIGNED: S. Nirp

DRAWN: A. Franqui

REVIEWED: W. Brewer

18-B3-8.2

SKILLING, HELLE, CHRISTIANSEN, ROBERTSON — Structural & Civil Engineers

PROJECT THE WORLD TRADE CENTER

TITLE ANCHOR PLATE KEY PLAN FLOOR 45

DATE 2-7-69

REVISIONS

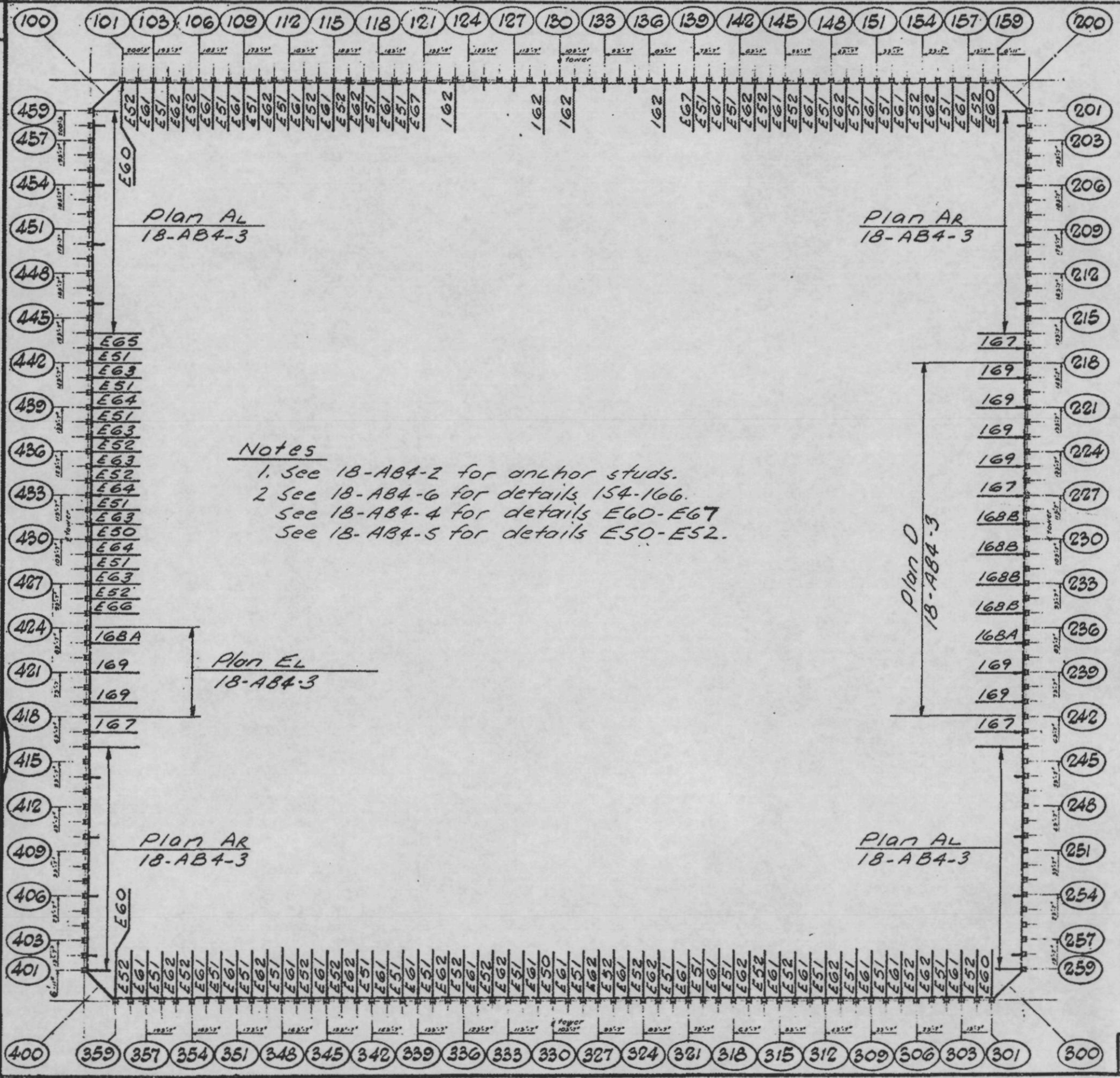

Notes

1. See 18-AB4-2 for anchor studs.
2. See 18-AB4-6 for details 154-166.
   See 18-AB4-4 for details E60-E67
   See 18-AB4-5 for details E50-E52.

LICENSED PROFESSIONAL ENGINEER
LESLIE E. ROBERTSON
No. 34360
UNIVERSITY OF THE STATE OF NEW YORK

DESIGNED

DRAWN A. Franqui

REVIEWED W. Brewer

18-AB3-9

SKILLING, HELLE, CHRISTIANSEN, ROBERTSON — **Structural & Civil Engineers**

PROJECT	TITLE	DATE
THE WORLD TRADE CENTER	ANCHOR PLATE KEY PLAN FLOORS 46-49	2-7-69

REVISIONS

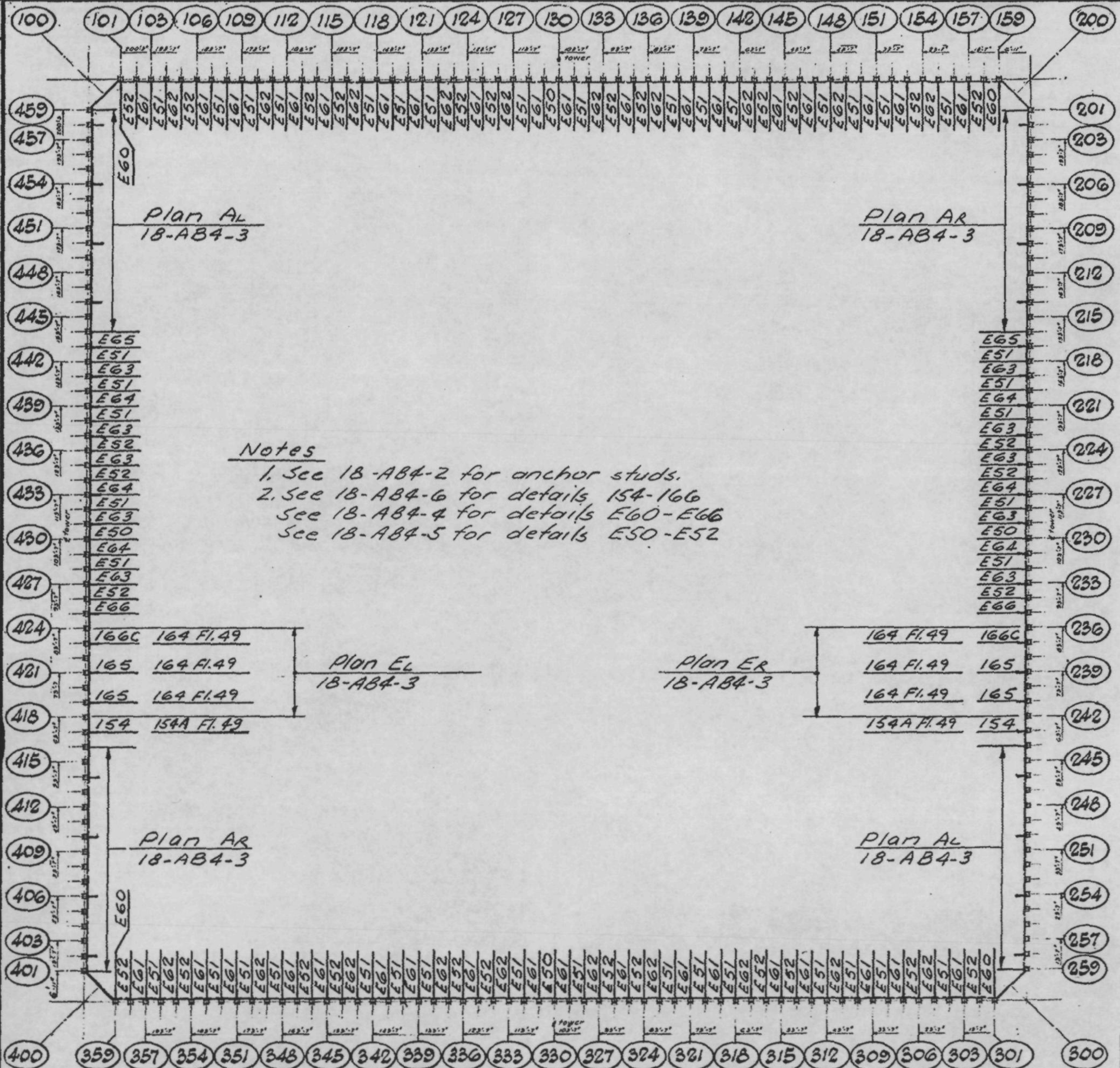

Notes
1. See 18-AB4-2 for anchor studs.
2. See 18-AB4-6 for details 154-166
   See 18-AB4-4 for details E60-E66
   See 18-AB4-5 for details E50-E52

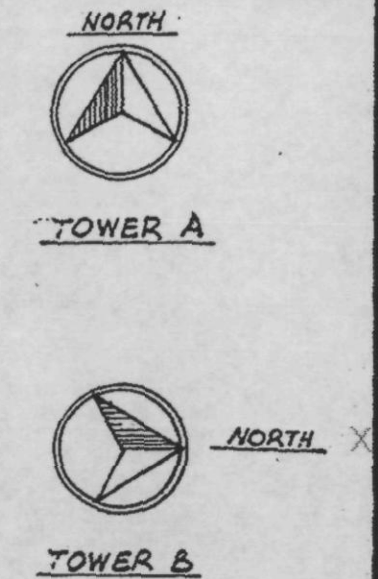

LICENSED PROFESSIONAL ENGINEER — LESLIE E. ROBERTSON — No. 34360 — UNIVERSITY OF THE STATE OF NEW YORK

DESIGNED: [illegible]
DRAWN: A. Franqui
REVIEWED: W. Brewer

18-AB3-10

SKILLING, HELLE, CHRISTIANSEN, ROBERTSON — Structural & Civil Engineers

PROJECT: THE WORLD TRADE CENTER

TITLE: ANCHOR PLATE KEY PLAN FLOOR 77

DATE: 2-7-69

REVISIONS

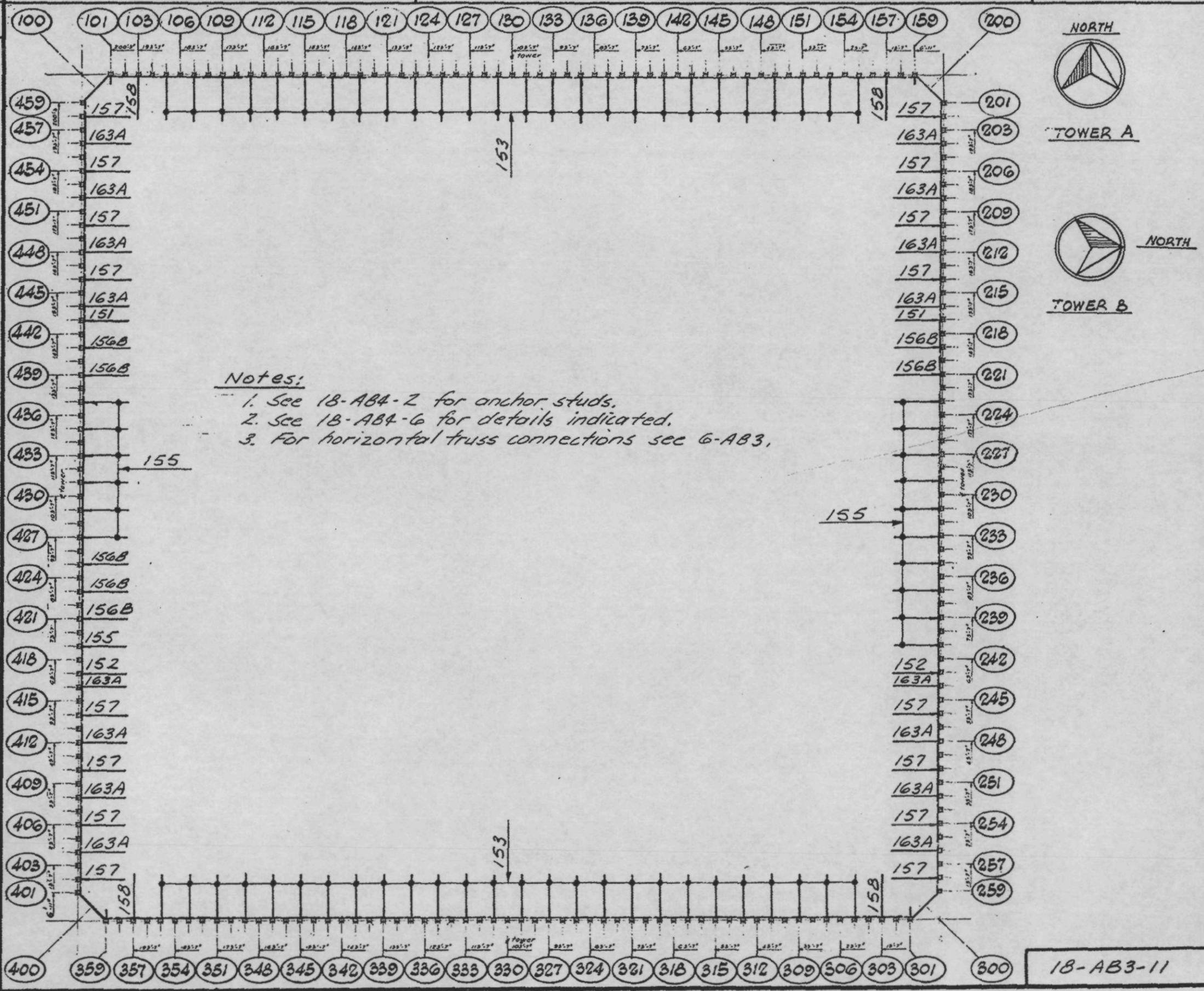

Notes:

1. See 18-AB4-2 for anchor studs.
2. See 18-AB4-6 for details indicated.
3. For horizontal truss connections see 6-AB3.

LICENSED PROFESSIONAL ENGINEER
LESLIE E. ROBERTSON
No. 34360
STATE OF NEW YORK

SIGNED

DRAWN: A. Franqui

REVIEWED: W. Brewer

18-AB3-11

SKILLING, HELLE, CHRISTIANSEN, ROBERTSON — **Structural & Civil Engineers**

PROJECT: THE WORLD TRADE CENTER | TITLE: ANCHOR PLATE KEY PLAN FLOOR 78 | DATE: 2-7-69

REVISIONS

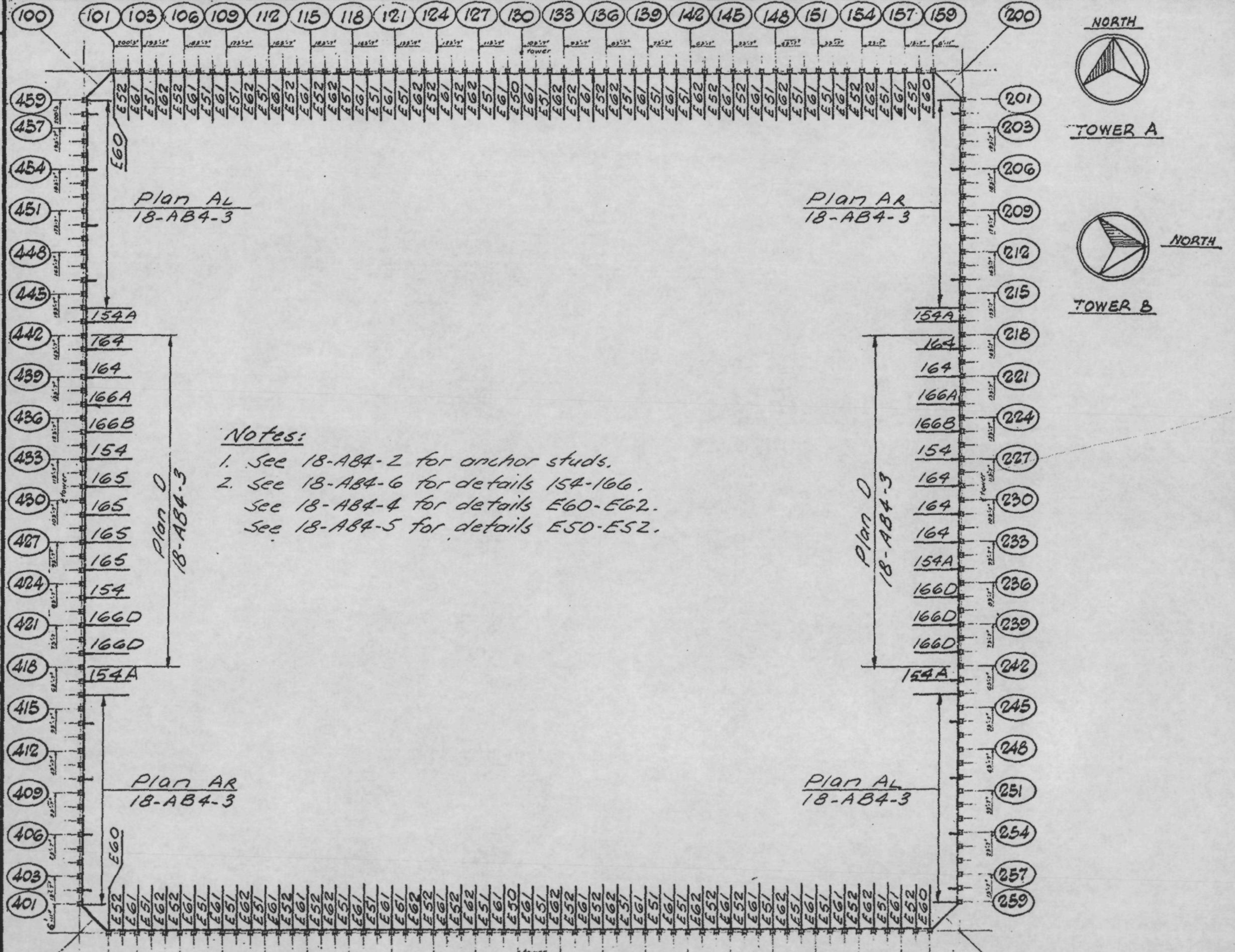

LICENSED PROFESSIONAL ENGINEER — LESLIE E. ROBERTSON — No. 34360 — UNIVERSITY OF THE STATE OF NEW YORK

DESIGNED: S. P

DRAWN: A. Franqui

REVIEWED: D. Brewer

18-AB3-12

SKILLING, HELLE, CHRISTIANSEN, ROBERTSON — Structural & Civil Engineers

PROJECT: THE WORLD TRADE CENTER

TITLE: ANCHOR PLATE KEY PLAN FLOOR 79

DATE: 2-7-69

REVISIONS

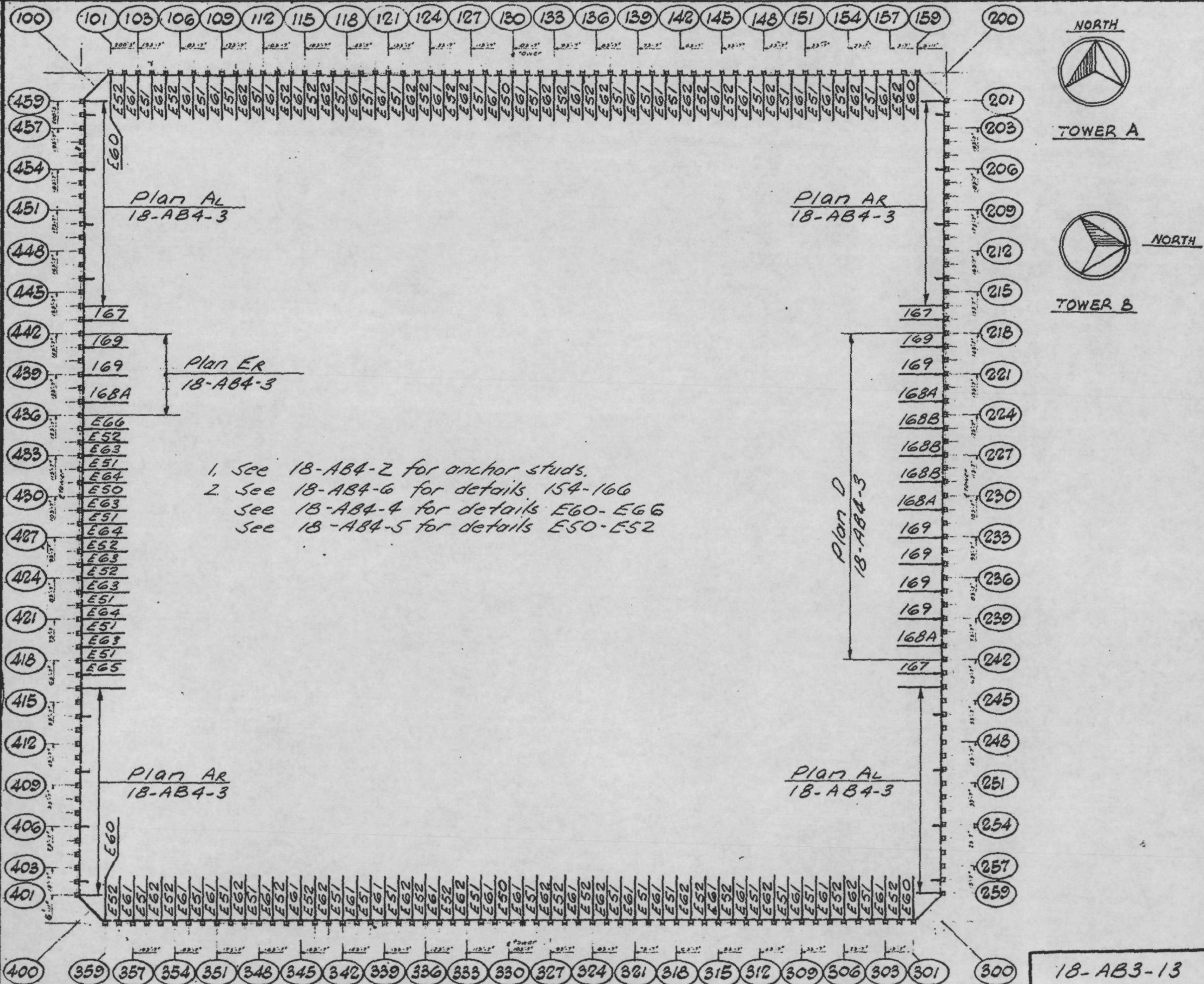

LICENSED PROFESSIONAL ENGINEER · LESLIE E. ROBERTSON · No. 34360 · UNIVERSITY OF THE STATE OF NEW YORK

DESIGNED: S. Karp

DRAWN: A. Franqui

REVIEWED: [illegible]

18-AB3-13

SKILLING, HELLE, CHRISTIANSEN, ROBERTSON — Structural & Civil Engineers

PROJECT: THE WORLD TRADE CENTER

TITLE: ANCHOR PLATE KEY PLAN FLOORS 80-83

DATE: 2-7-69

SIONS

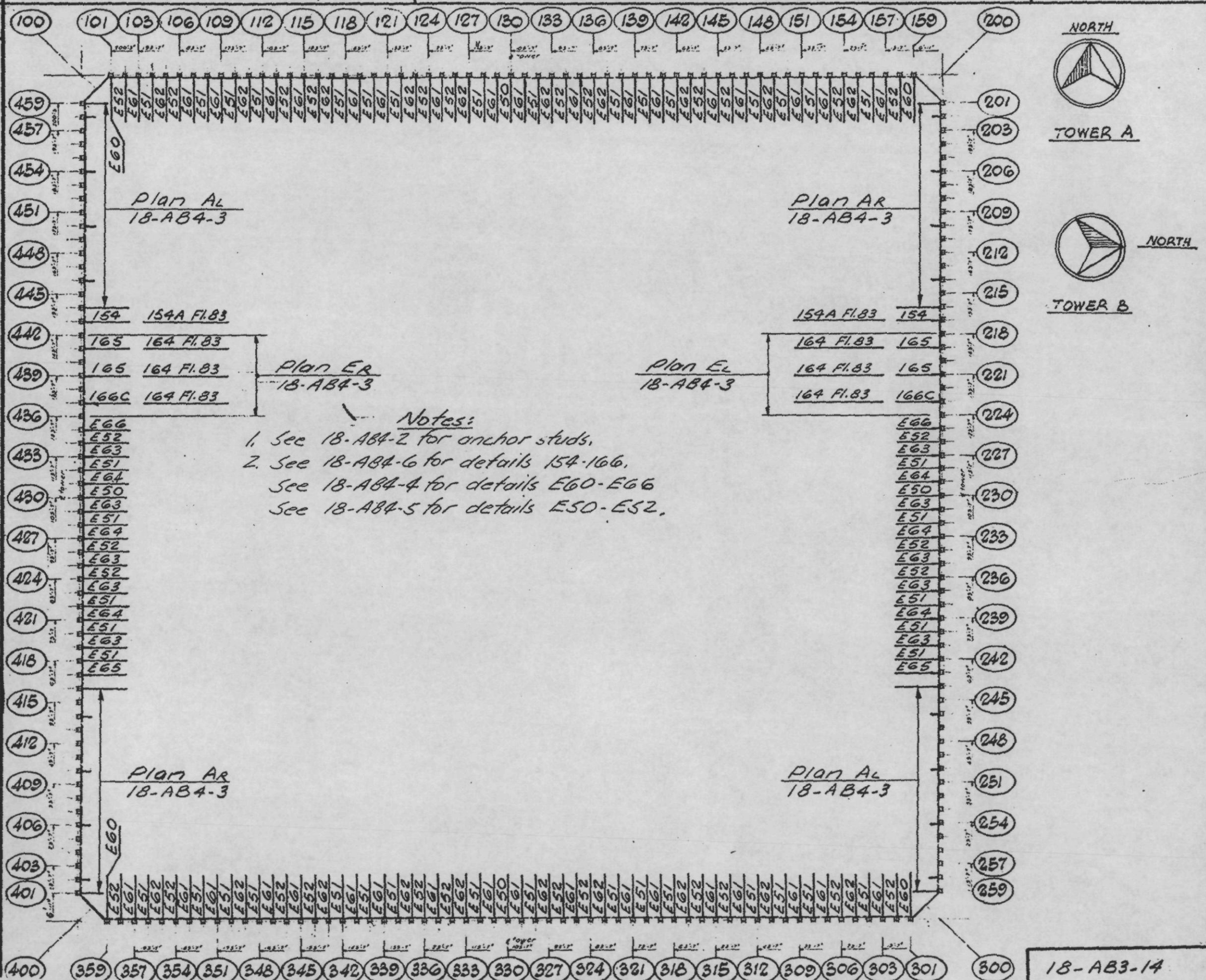

Notes:

1. See 18-AB4-2 for anchor studs.
2. See 18-AB4-6 for details 154-166.
   See 18-AB4-4 for details E60-E66
   See 18-AB4-5 for details E50-E52.

LICENSED PROFESSIONAL ENGINEER
LESLIE E. ROBERTSON
No. 34360
UNIVERSITY OF THE STATE OF NEW YORK

DESIGNED S. Karp

DRAWN A. Franqui

REVIEWED

18-AB3-14

SKILLING, HELLE, CHRISTIANSEN, ROBERTSON — Structural & Civil Engineers

PROJECT THE WORLD TRADE CENTER | TITLE ANCHOR DETAILS AT EXTERIOR WALL | DATE 2-7-69

SIONS

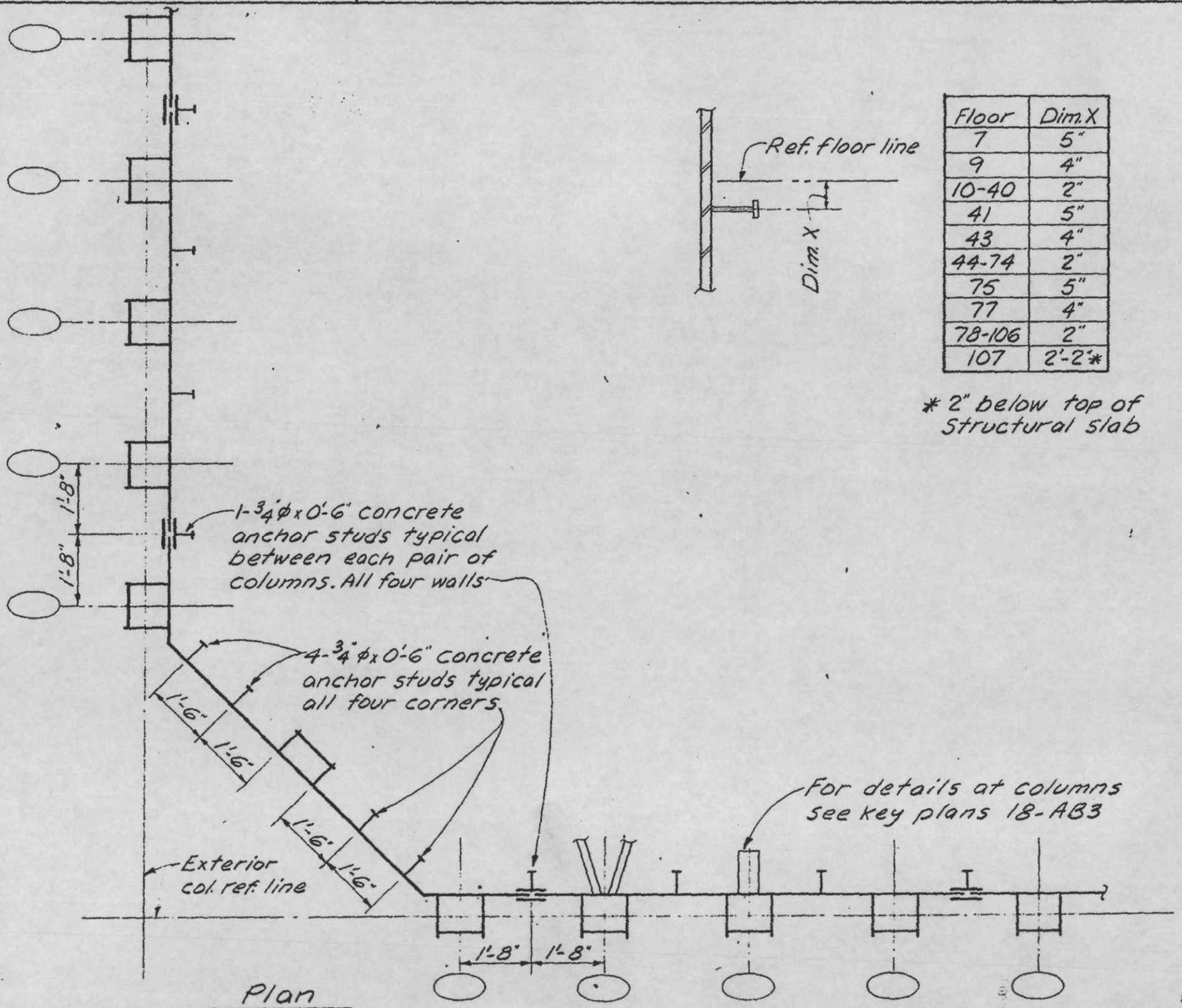

Plan

Floor	Dim. X
7	5"
9	4"
10-40	2"
41	5"
43	4"
44-74	2"
75	5"
77	4"
78-106	2"
107	2'-2"*

* 2" below top of Structural slab

TYPICAL ARRANGEMENT OF ANCHOR DETAILS AT EXTERIOR WALL OF BUILDING

For floors covered see Schedule

LICENSED PROFESSIONAL ENGINEER LESLIE E. ROBERTSON No. 34360 UNIVERSITY OF THE STATE OF NEW YORK

SIGNED J. Karp

DRAWN A FRANQUI

REVIEWED

18-AB4-2.1

SKILLING, HELLE, CHRISTIANSEN, ROBERTSON — Structural & Civil Engineers

PROJECT: THE WORLD TRADE CENTER | TITLE: ANCHOR DETAILS AT EXTERIOR WALL | DATE: 2-7-69

SIONS

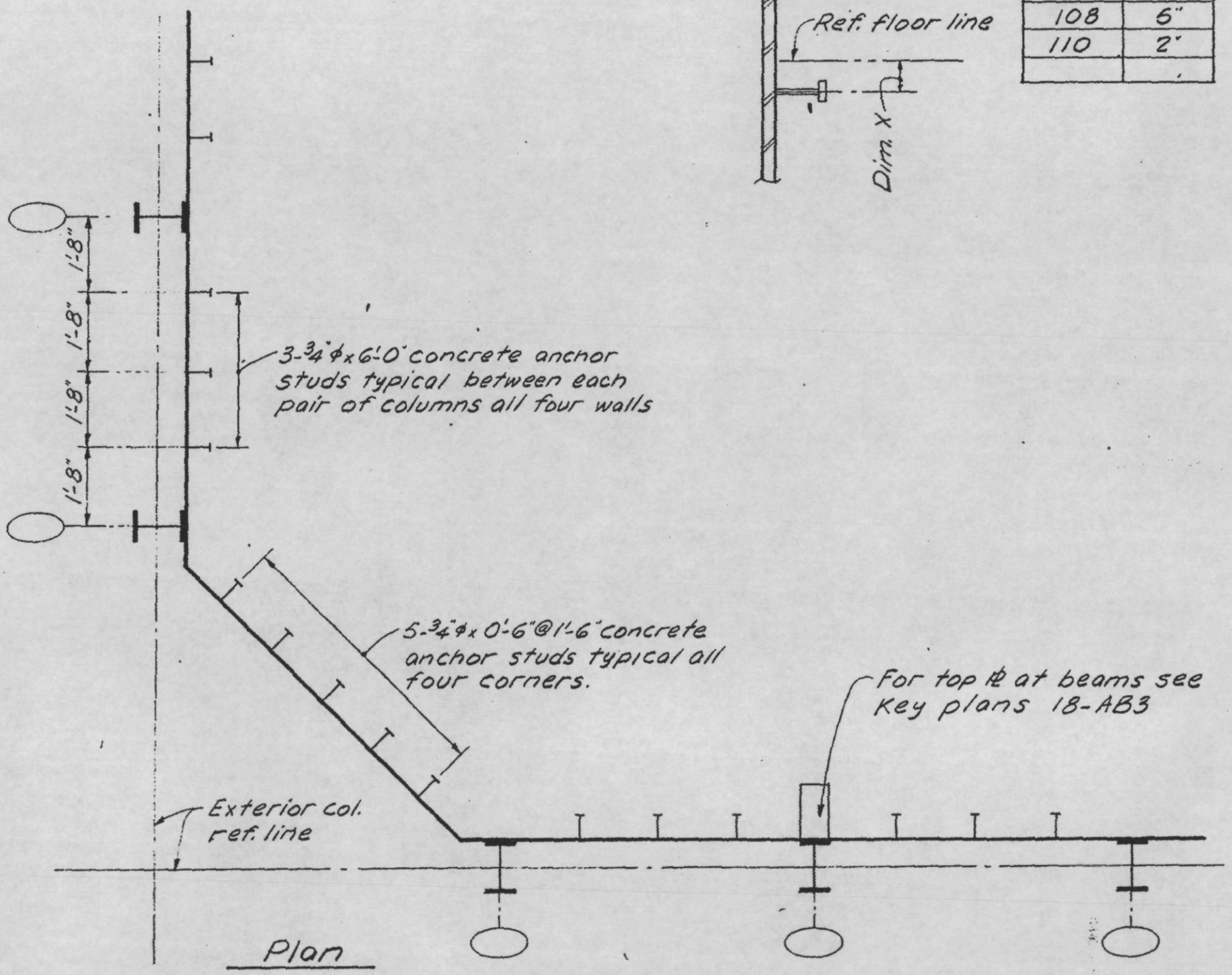

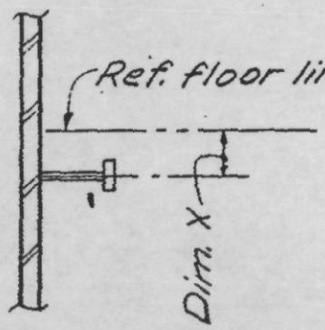

Floor	Dim. X
108	5"
110	2"

LICENSED PROFESSIONAL ENGINEER
LESLIE E. ROBERTSON
No. 34360
UNIVERSITY OF THE STATE OF NEW YORK

DESIGNED S. Karp
DRAWN A. FRANQUI
REVIEWED

TYPICAL ARRANGEMENT OF ANCHOR DETAILS AT EXTERIOR WALL OF BUILDING
For floors covered see schedule

18-AB4-2.2

SKILLING, HELLE, CHRISTIANSEN, ROBERTSON — Structural & Civil Engineers

PROJECT	TITLE	DATE
THE WORLD TRADE CENTER	ANCHOR DETAILS - EXTERIOR WALL - INDEX	11/ 7/69

REVISIONS

18-A84- 1 INDEX
18-A84- 2.1 ANCHOR DETAILS AT EXTERIOR WALL
18-A84- 2.2 ANCHOR DETAILS AT EXTERIOR WALL
18-A84- 3.1 DETAIL PLANS A, B
18-A84- 3.2 DETAIL PLAN C
18-A84- 3.3 DETAIL PLANS D, E, F
18-A84- 4.1 DETAILS E61 - E67
18-A84- 4.2 DETAILS E60, E69
18-A84- 4.3 DETAILS E68, E68A
18-A84- 4.4 DETAILS E70, E70A, E71, E71A, E74
18-A84- 4.5 DETAILS E75, E75A
18-A84- 5.1 DETAILS E50, E51, E52, E80 - E83
18-A84- 5.2 DETAILS E40, E42, E45, E53 - E55
18-A84- 5.3 DETAILS E44, E56 - E59, E84
18-A84- 5.4 SECTIONS
18-A84- 5.5 DETAILS E51D, E52D
18-A84- 5.6 DETAIL E 54A
18-A84- 5.7 DETAIL E 59A
18-A84- 6.1 DETAILS 159, 160, 161, 163C
18-A84- 6.2 DETAILS 150 -158, 162, 163A, 163B, 164 - 169
18-A84- 7.1 DETAILS 8.4, 8.10, 8.X
18-A84- 7.2 DETAIL 10.1
18-A84- 7.3 DETAILS 10.2, 10.3, 10.4
18-A84- 8.1 DETAILS 12.1,12.2,12.3,12.4,12.5,12.9,12.10
18-A84- 8.2 DETAILS 12.6, 12.7, 12.8
18-A84- 8.3 DETAIL 12.11
18-A84- 9 DETAILS 13.1, 13.2, 13.3
18-A84- 10.1 STUD DETAILS A & C
18-A84- 10.2 STUD DETAILS B, C, & E & F

LICENSED PROFESSIONAL ENGINEER
LESLIE E. ROBERTSON
No. 34360
UNIVERSITY OF THE STATE OF NEW YORK

SKILLING HELLE CHRISTIANSEN, ROBERTSON — Structural & Civil Engineers

PROJECT: THE WORLD TRADE CENTER | TITLE: ANCHOR DETAILS - EXTERIOR WALL - DETAIL PLANS A & B | DATE: 2-1-67

REVISIONS

See 18-AB4-5 for details indicated.

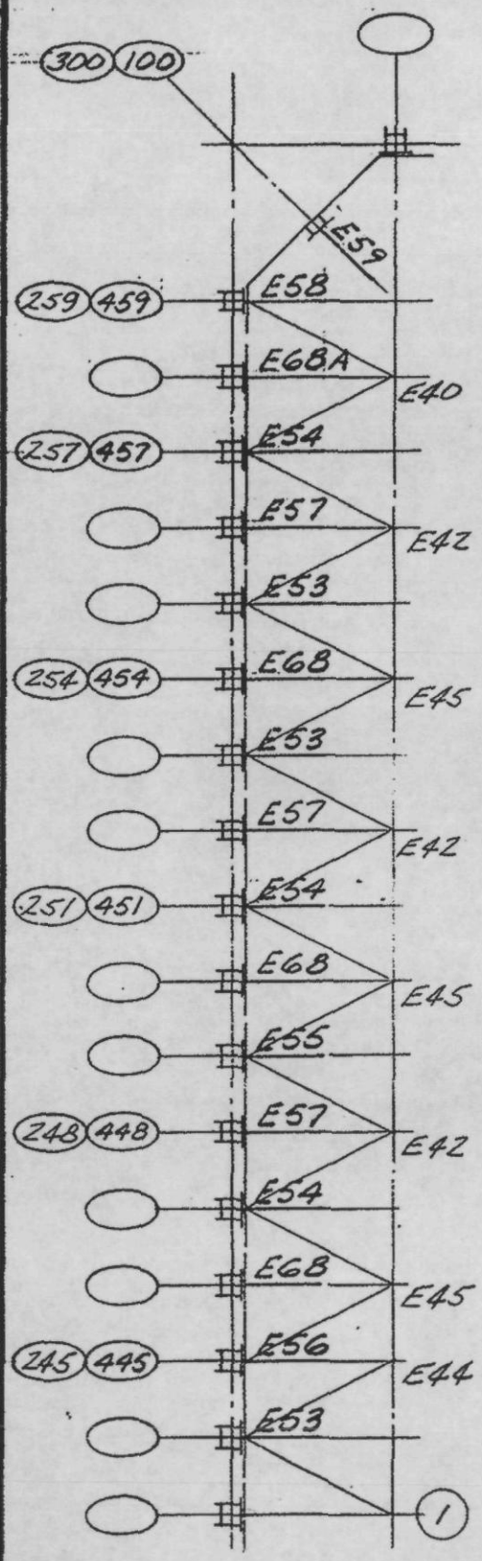

Plan AL

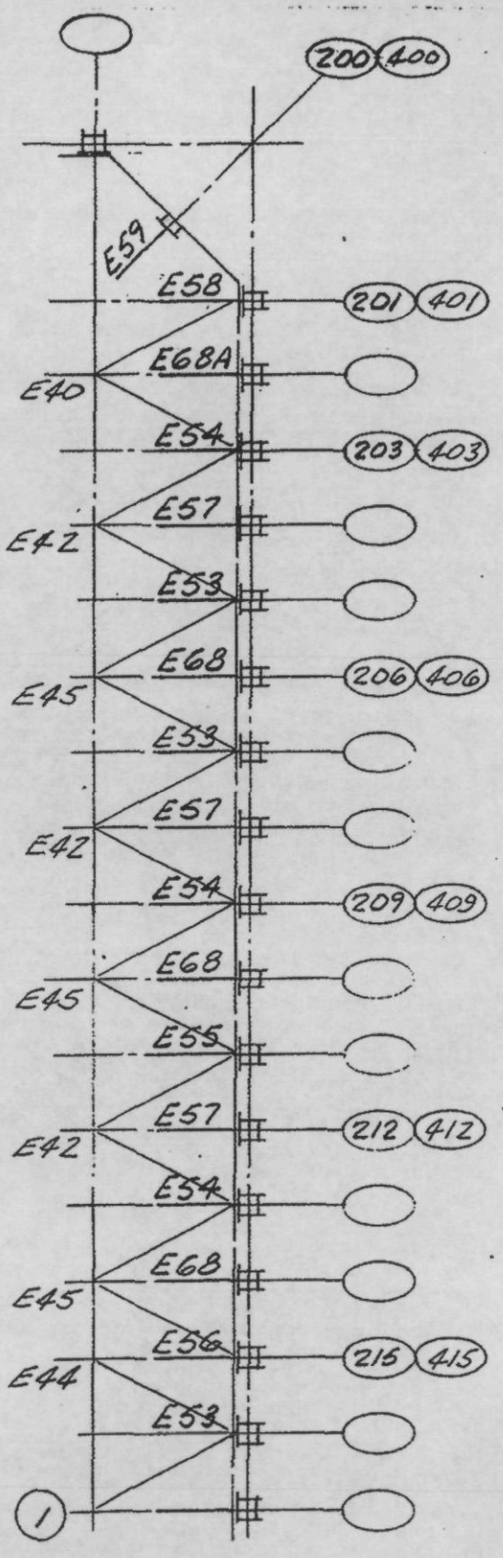

Plan AR

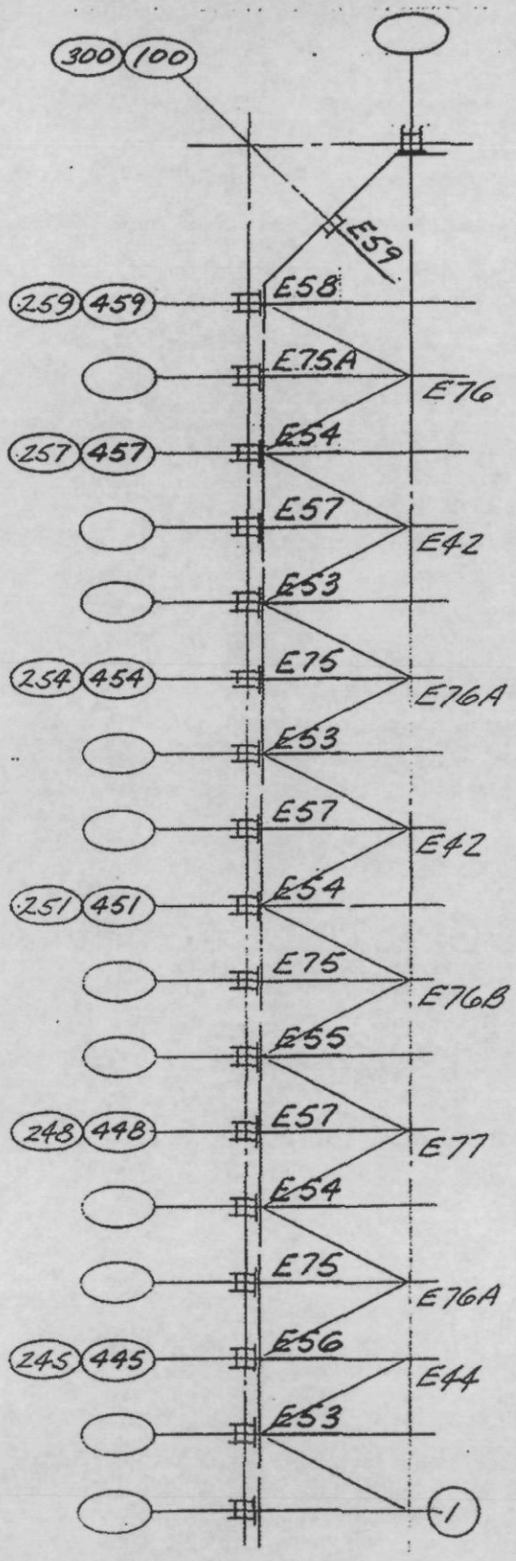

Plan BL

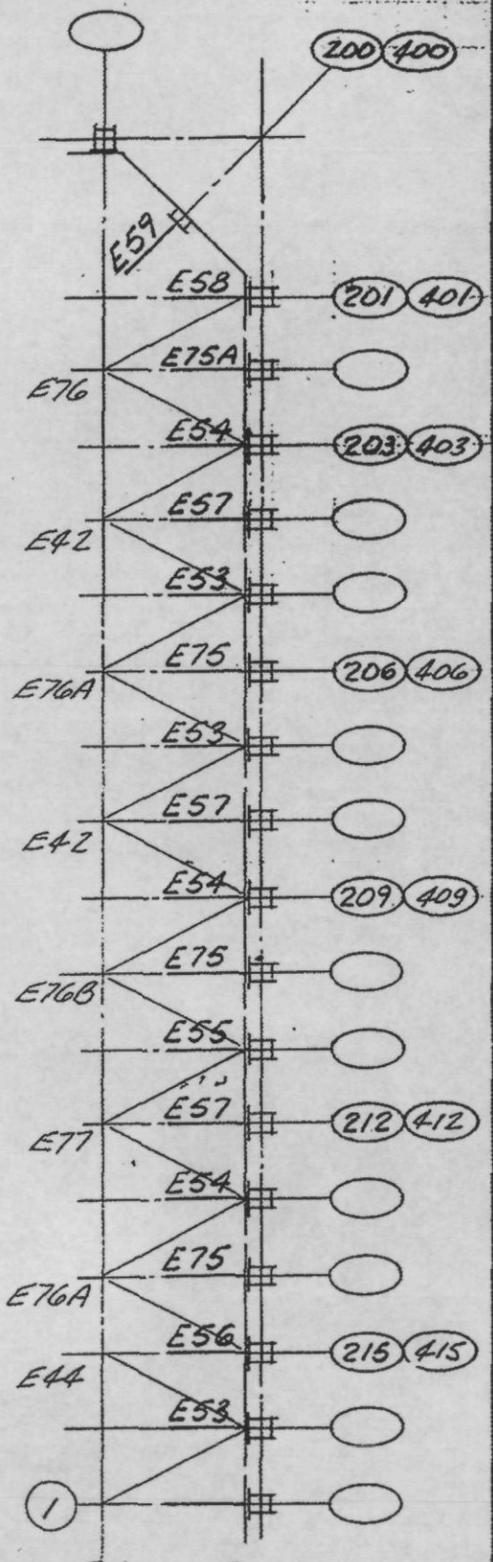

Plan BR

Note (1) E83 except where Plan C or E are adjacent use Detail E82.

LICENSED PROFESSIONAL ENGINEER
LESLIE E. ROBERTSON
No. 34360
CITY OF THE STATE OF NEW YORK

DESIGNED J. Karp
DRAWN J. Adams
REVIEWED W. Brewer

18-AB4-3.1

SKILLING, HELLE, CHRISTIANSEN, ROBERTSON — Structural & Civil Engineers

PROJECT: THE WORLD TRADE CENTER | TITLE: ANCHOR DETAILS-EXTERIOR WALL DETAIL PLAN ℄ | DATE: 2-7-69

REVISIONS

See 18-AB4-5 for details indicated

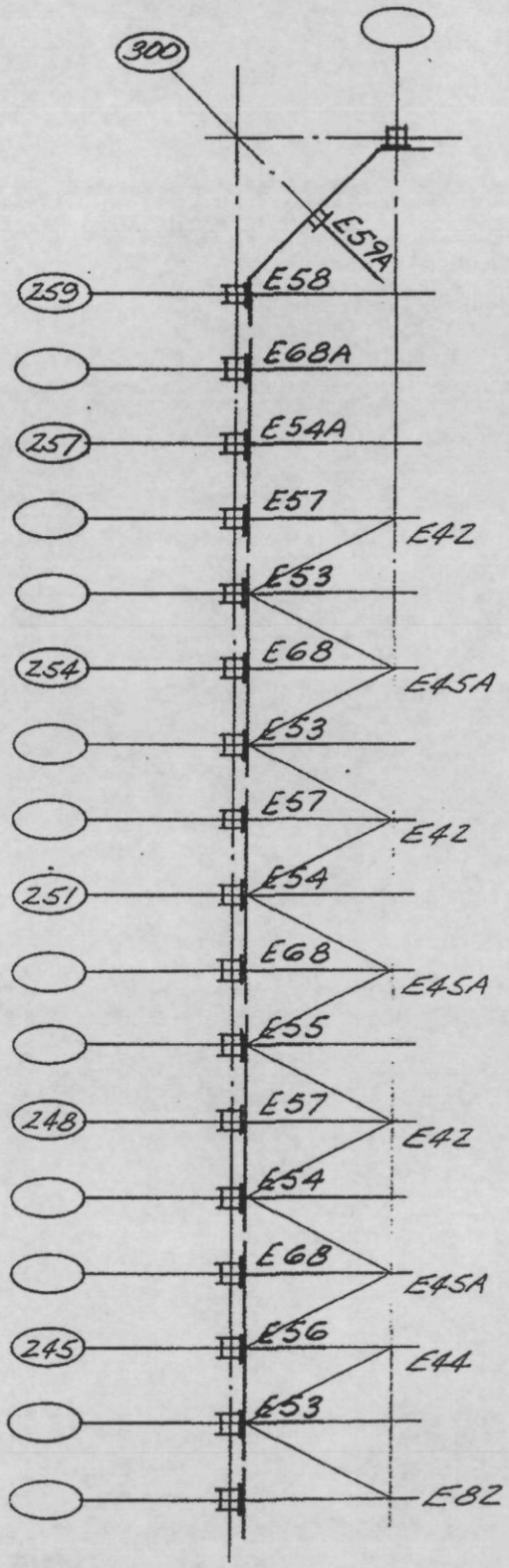

Plan CL

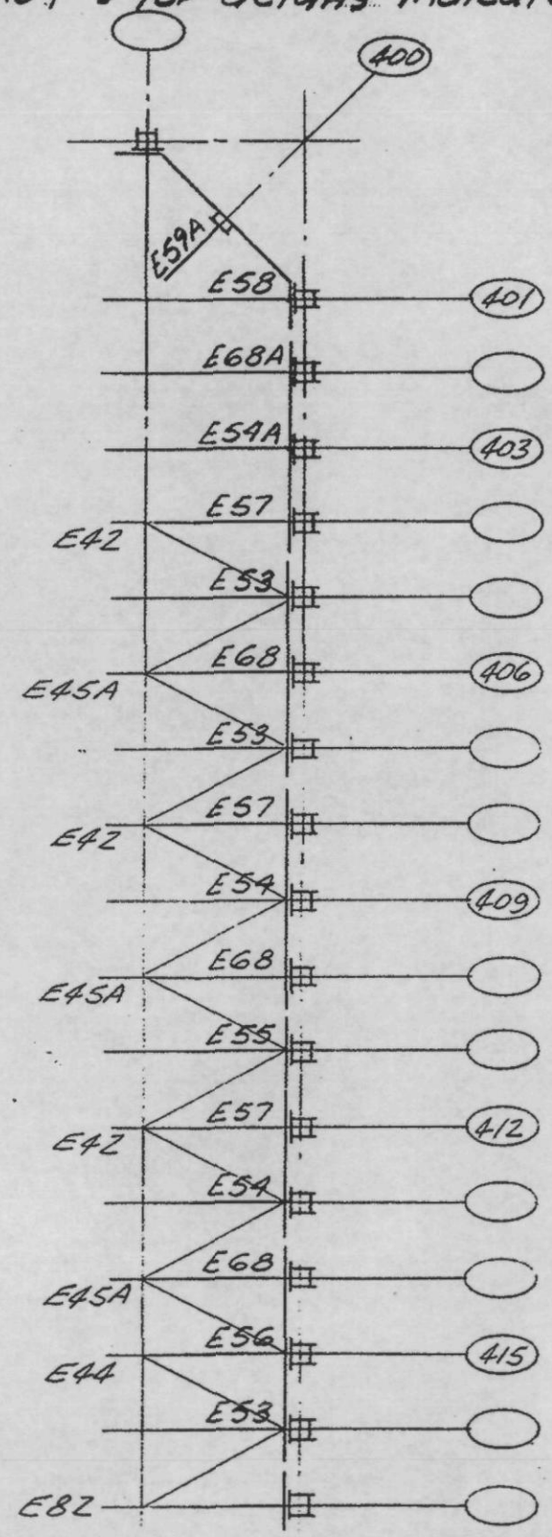

Plan CR

LICENSED PROFESSIONAL ENGINEER
LESLIE E. ROBERTSON
No. 34360
CITY OF THE STATE OF NEW YORK

DESIGNED J. Karp

DRAWN J. Adams

REVIEWED W. Brewer

18-AB4-3.2

SKILLING, HELLE, CHRISTIANSEN, ROBERTSON — Structural & Civil Engineers

PROJECT: THE WORLD TRADE CENTER | TITLE: ANCHOR DETAILS-EXTERIOR WALL DETAIL PLANS D, E, F | DATE: 2-1-69

REVISIONS

See 18-AB4-3 for details indicated

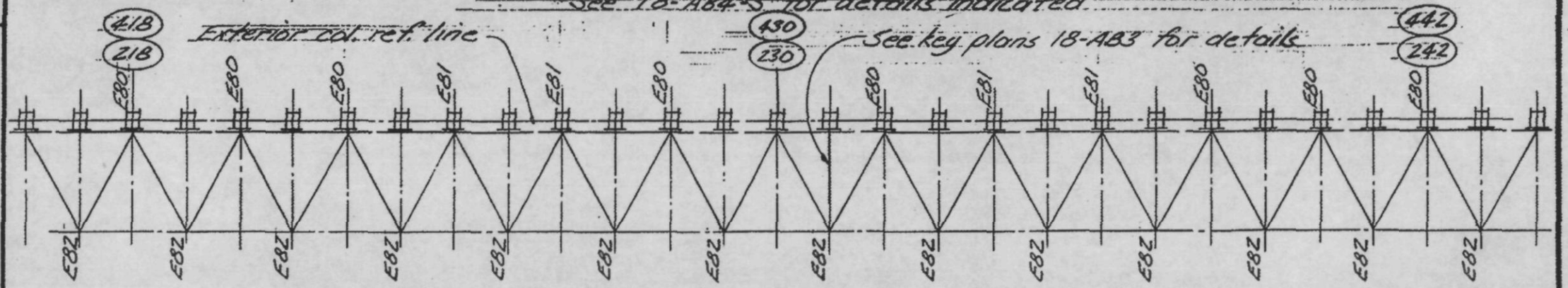

Plan D

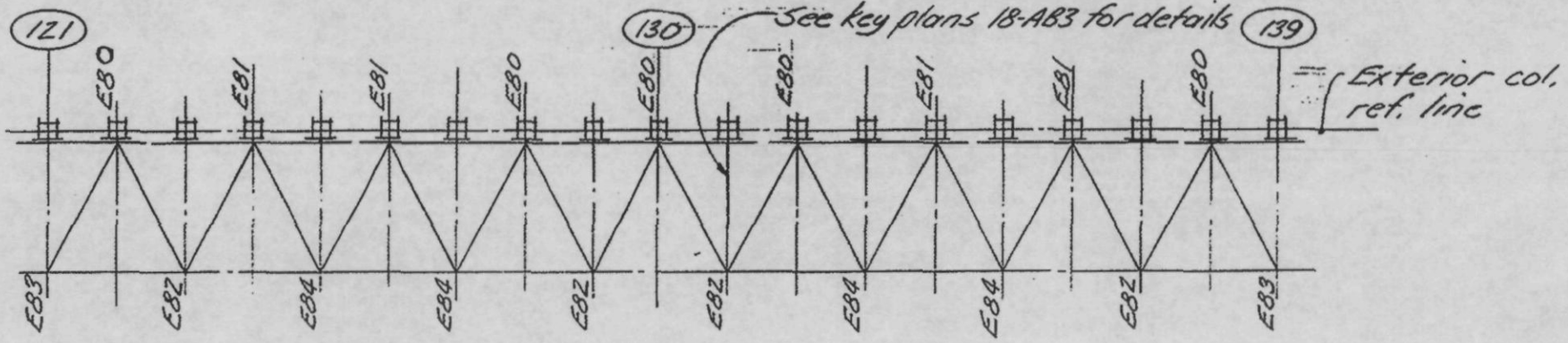

Plan F

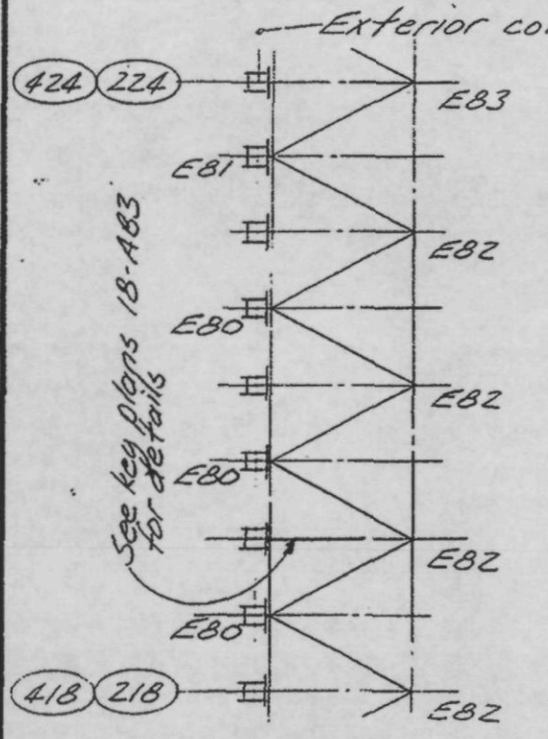

Plan EL

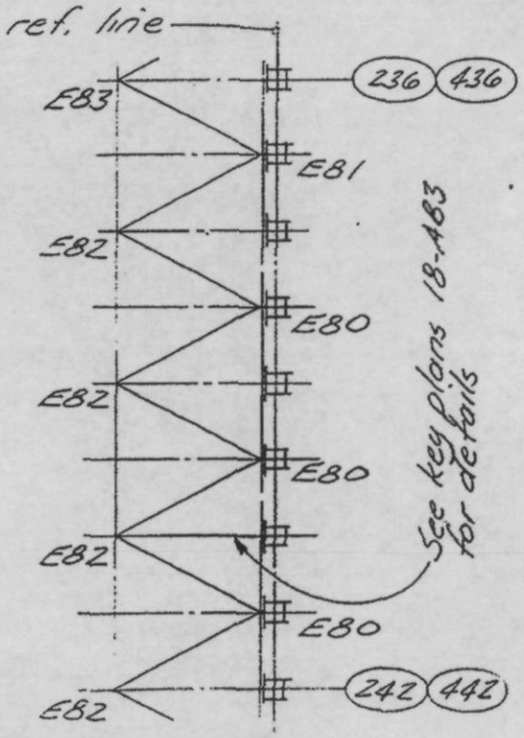

Plan ER

LICENSED PROFESSIONAL ENGINEER
LESLIE E. ROBERTSON
No. 34360
UNIVERSITY OF THE STATE OF NEW YORK

DESIGNED S. Karp

DRAWN J. Adams

REVIEWED W. Brewer

18-AB4-3.3

SKILLING, HELLE, CHRISTIANSEN, ROBERTSON — Structural & Civil Engineers

PROJECT: THE WORLD TRADE CENTER | TITLE: DETAILS E61 - E67 | DATE: 2-7-69

REVISIONS

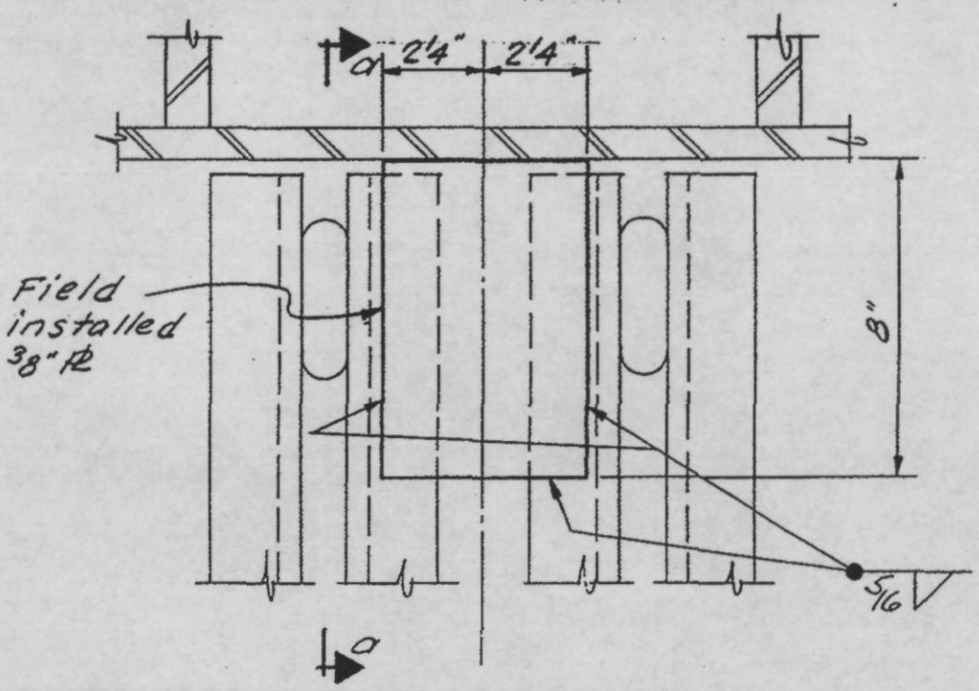

Detail E61, E62, E65, E67

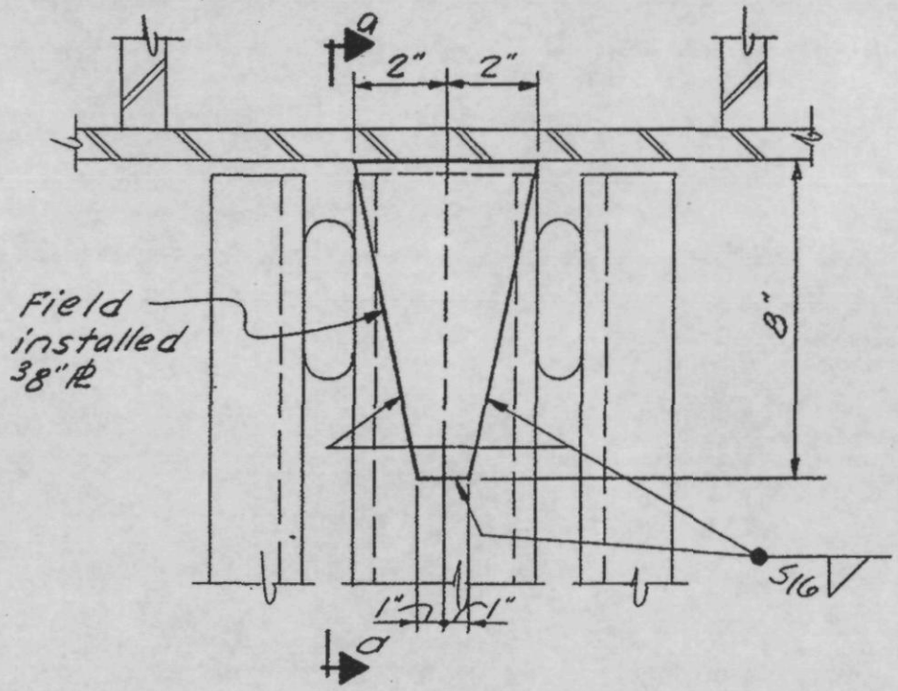

Detail E63, E64, E66

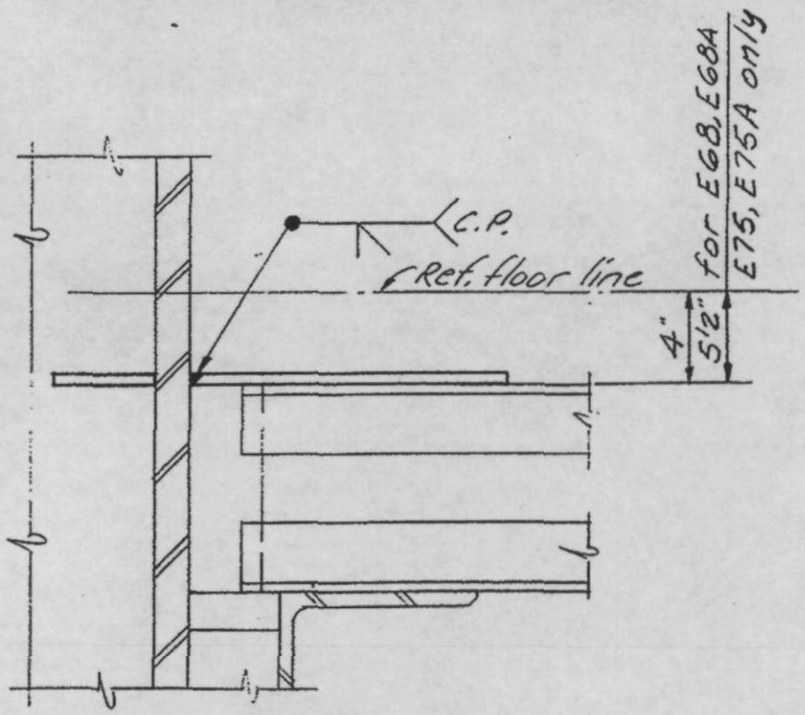

Section a-a

LICENSED PROFESSIONAL ENGINEER
LESLIE E. ROBERTSON
No. 34360
UNIVERSITY OF THE STATE OF NEW YORK

DESIGNED S. Carp

DRAWN Adams

REVIEWED W. Brewer

18-AB4-4.1

SKILLING, HELLE, CHRISTIANSEN, ROBERTSON — Structural & Civil Engineers

PROJECT: THE WORLD TRADE CENTER | TITLE: DETAILS E60, E69 | DATE: 2-1-69

REVISIONS

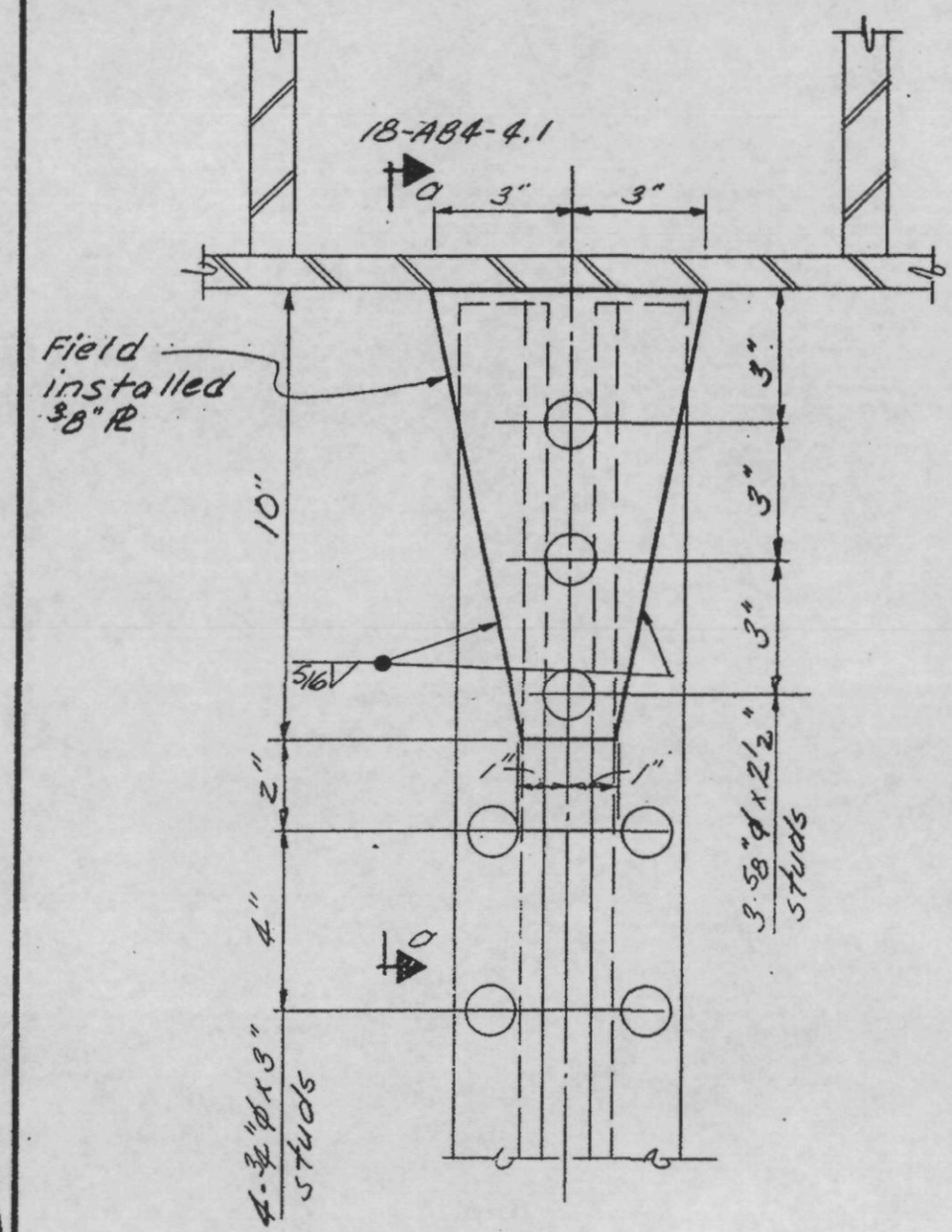

E60

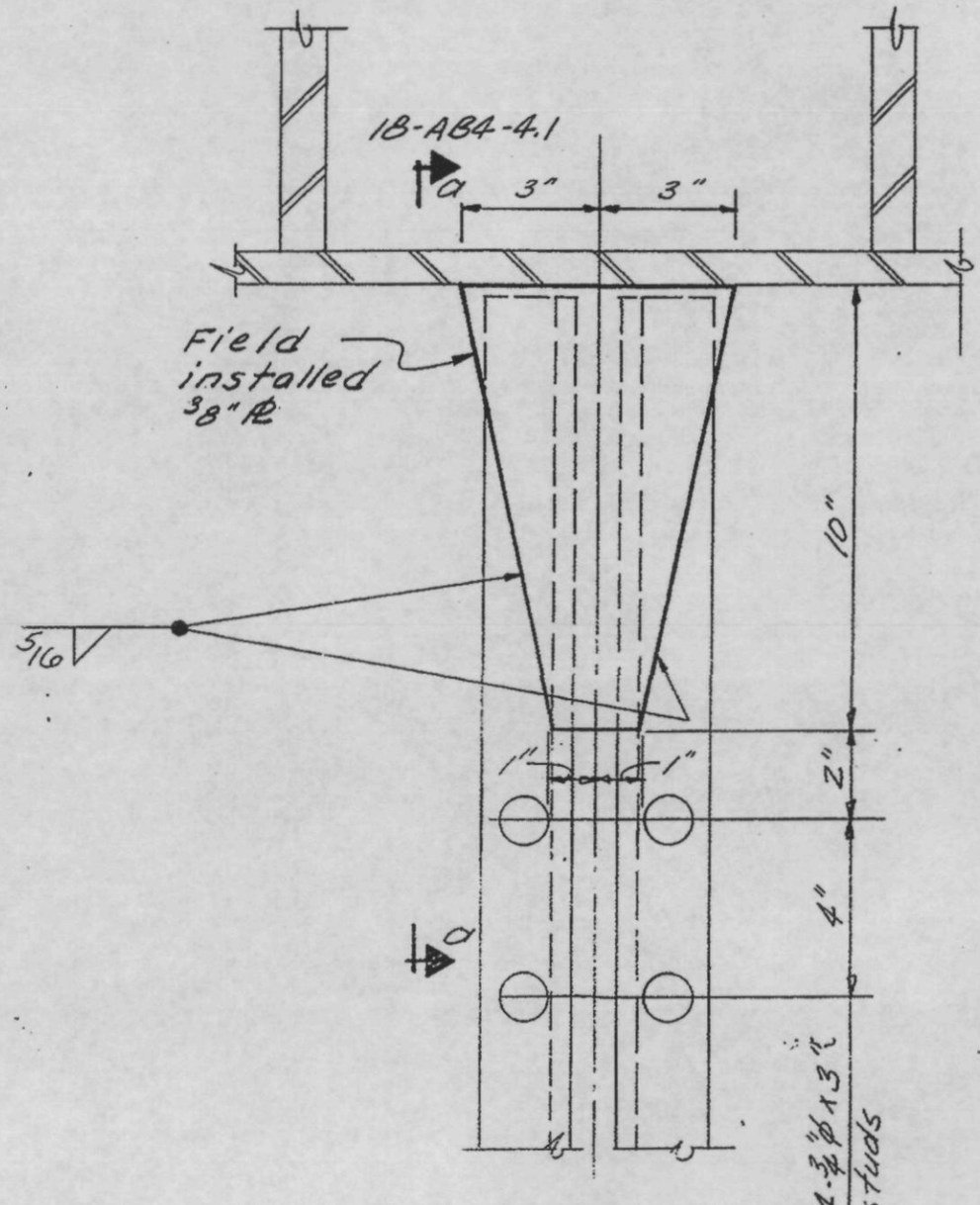

E69

LICENSED PROFESSIONAL ENGINEER
LESLIE E. ROBERTSON
No. 34360
UNIVERSITY OF THE STATE OF NEW YORK

DESIGNED
E. Sharp
DRAWN
REVIEWED
W. J. Brewer

18-AB4-4.2

SKILLING, HELLE, CHRISTIANSEN, ROBERTSON — Structural & Civil Engineers

PROJECT: THE WORLD TRADE CENTER | TITLE: DETAILS E68 AND E68A | DATE: 2-7-69

REVISIONS

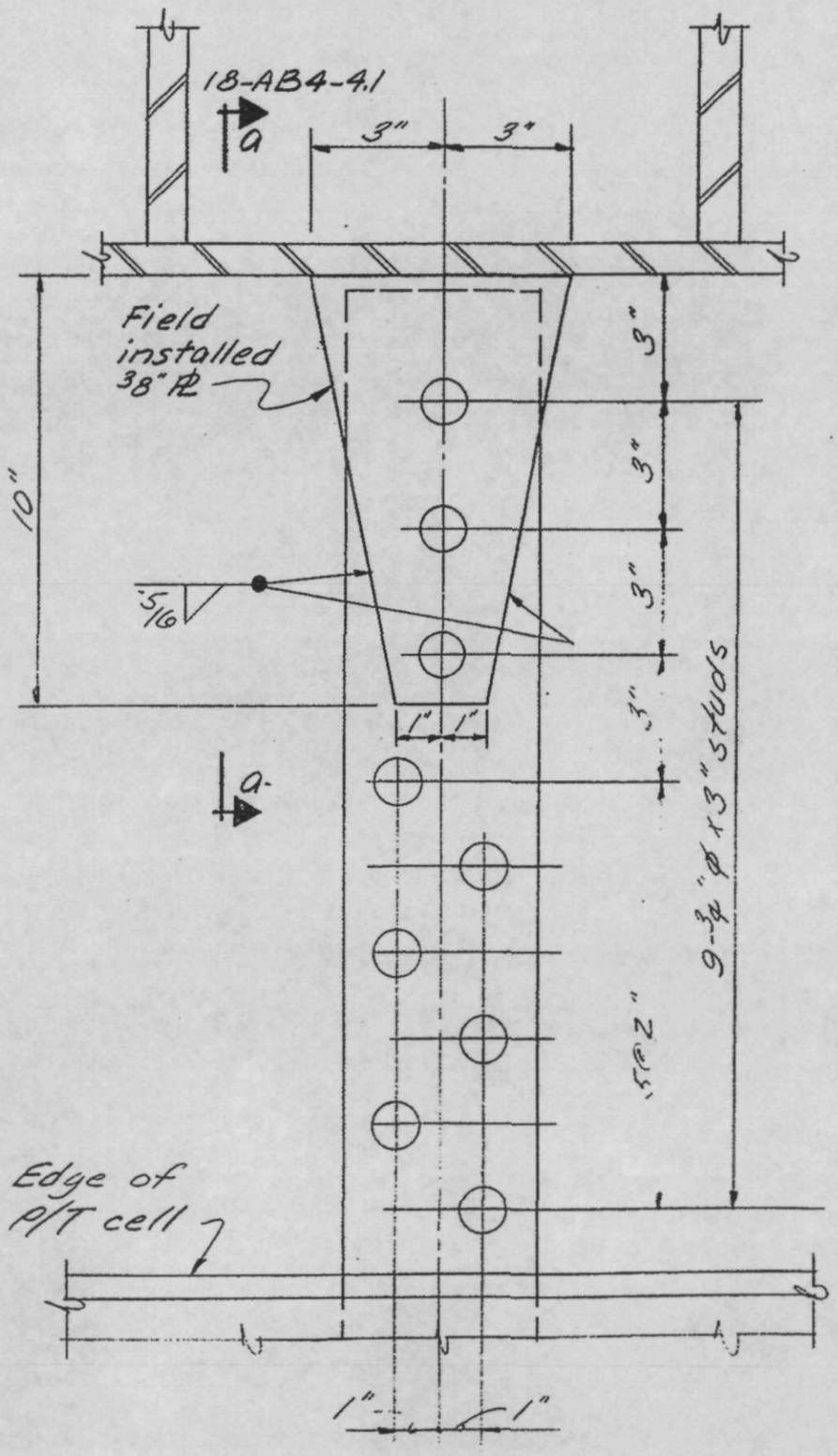

E68

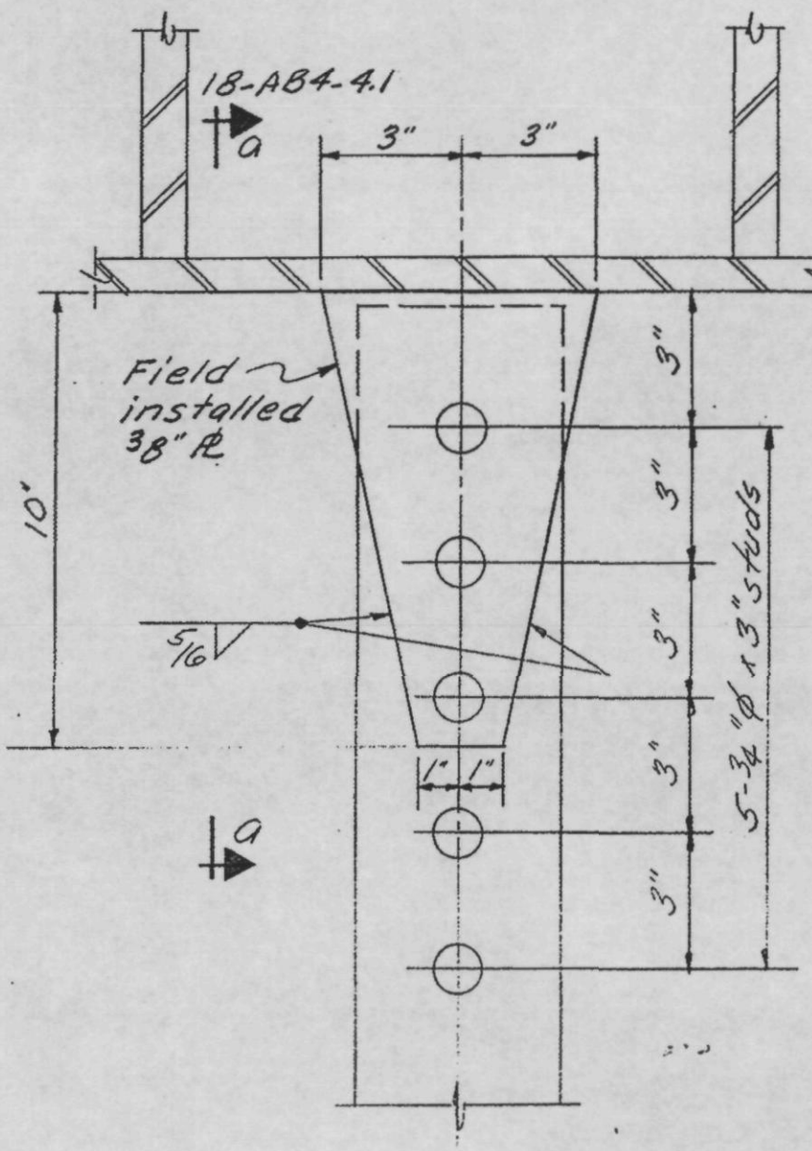

E68A

LICENSED PROFESSIONAL ENGINEER
LESLIE E. ROBERTSON
No. 34360
CITY OF THE STATE OF NEW YORK

SIGNED S. Sharp
DRAWN A. Adams
REVIEWED W. Brewer

18-AB4-4.3

SKILLING, HELLE, CHRISTIANSEN, ROBERTSON — Structural & Civil Engineers

PROJECT: THE WORLD TRADE CENTER | TITLE: DETAILS E70, E70A, E71, E71A, E74 | DATE: 2-7-69

REVISIONS

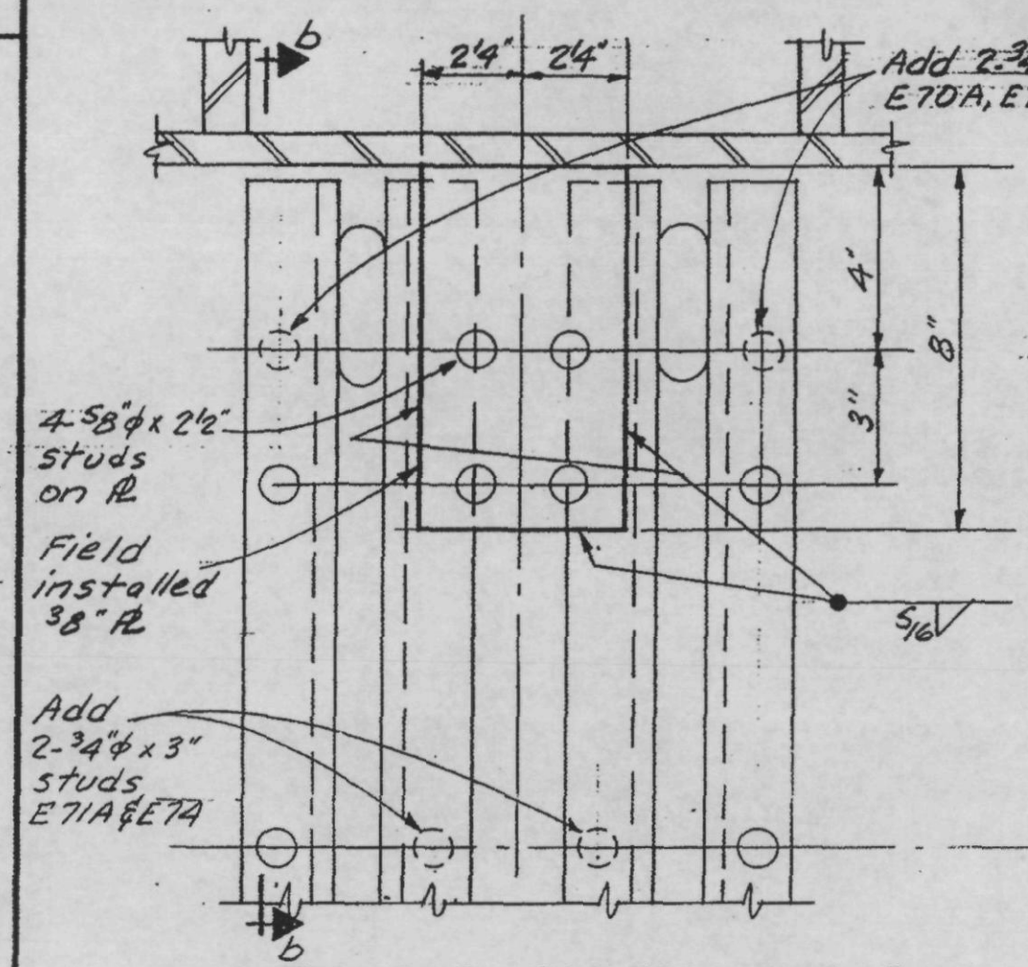

DETAIL E70, E70A, E71, E71A & E74

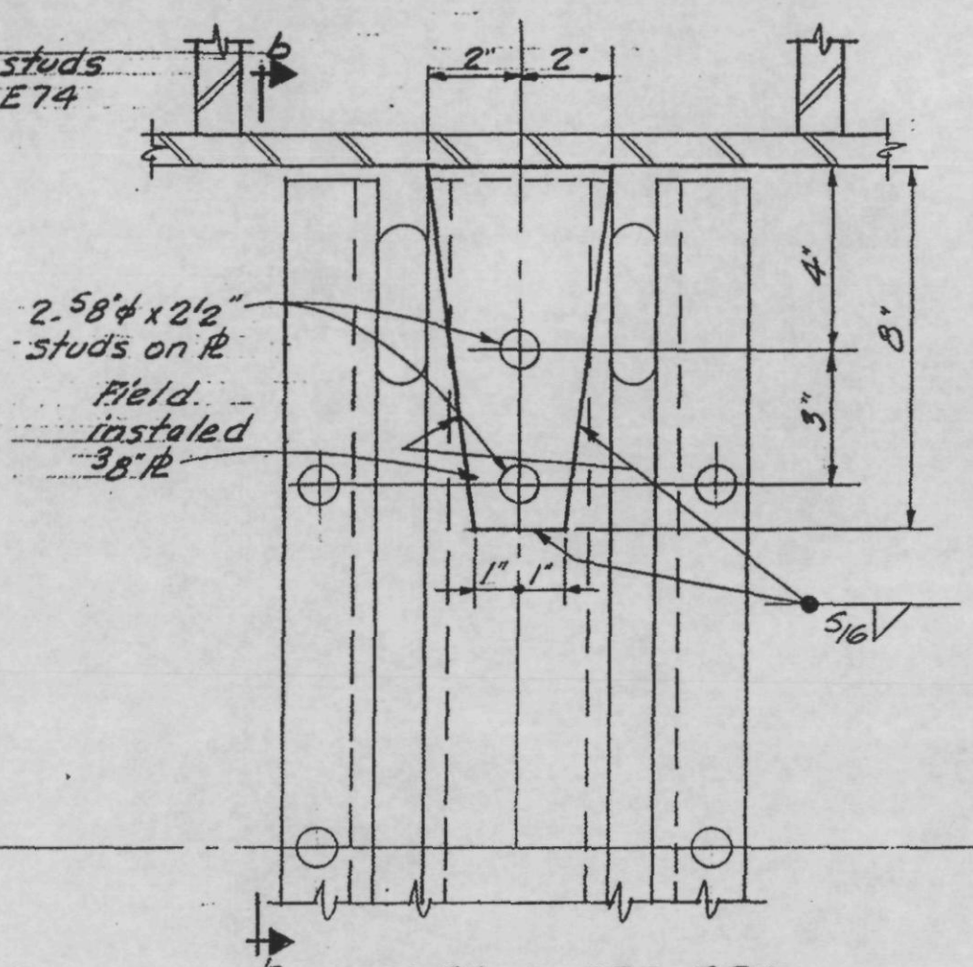

DETAIL E72, E73

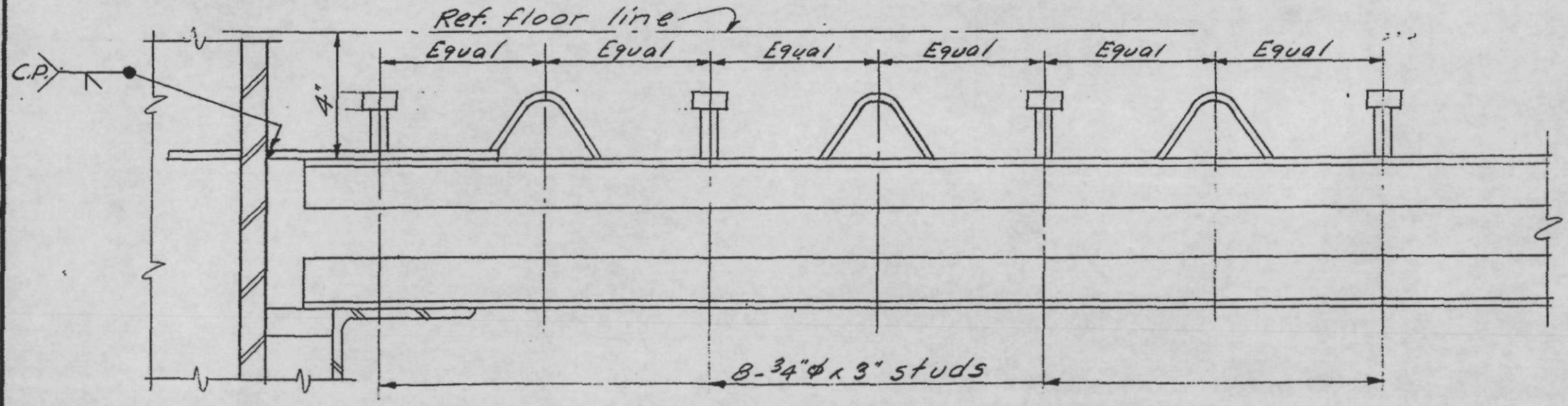

Section b-b

SED PROFESSIONAL ENGINEER
LESLIE E. ROBERTSON
No. 34360
TY OF THE STATE OF NEW YORK

SIGNED S. Kaip

DRAWN A. FRANQUI

REVIEWED W. Brewer

18-AB4-4.4

SKILLING, HELLE, CHRISTIANSEN, ROBERTSON — Structural & Civil Engineers

PROJECT: THE WORLD TRADE CENTER | TITLE: DETAILS E75 AND E75A | DATE: 2-7-69

REVISIONS

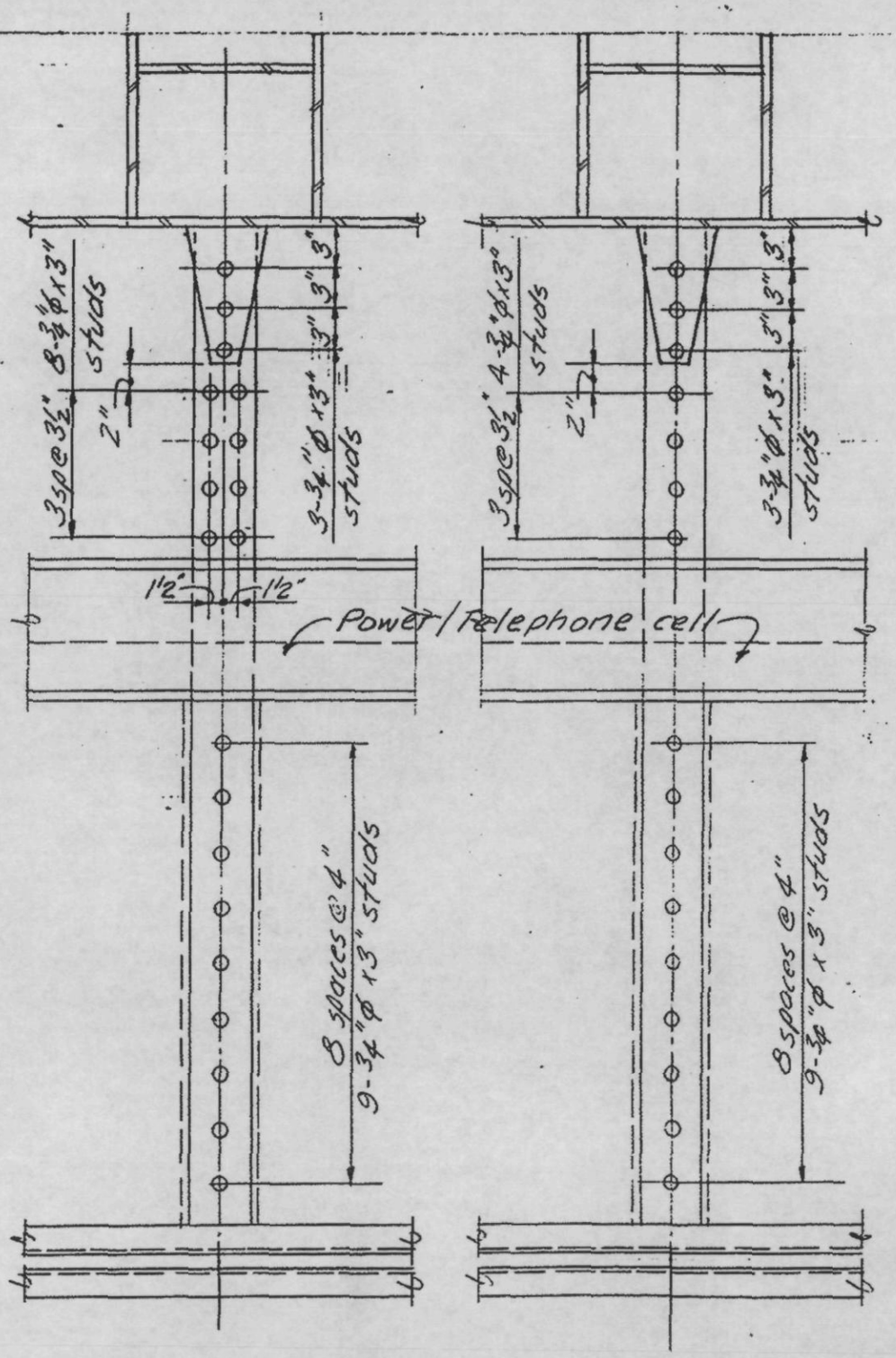

E75 E75A

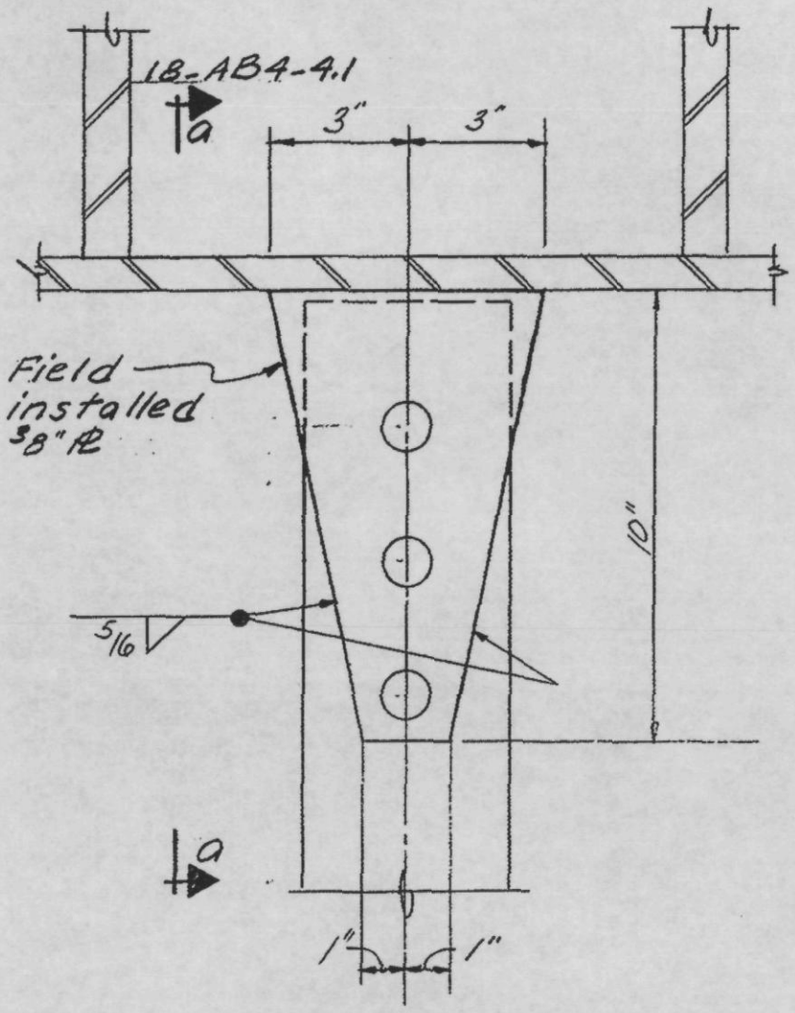

Detail E75, E75A

LICENSED PROFESSIONAL ENGINEER — LESLIE E. ROBERTSON — No. 34360 — UNIVERSITY OF THE STATE OF NEW YORK

SIGNED S. Karp

DRAWN Adams

REVIEWED W. Brewer

18-AB4-4.5

SKILLING, HELLE, CHRISTIANSEN, ROBERTSON — Structural & Civil Engineers

PROJECT: THE WORLD TRADE CENTER

TITLE: DETAILS E50, E51, E52, E80, E81, E82, E83

DATE: 2-1-69

REVISIONS

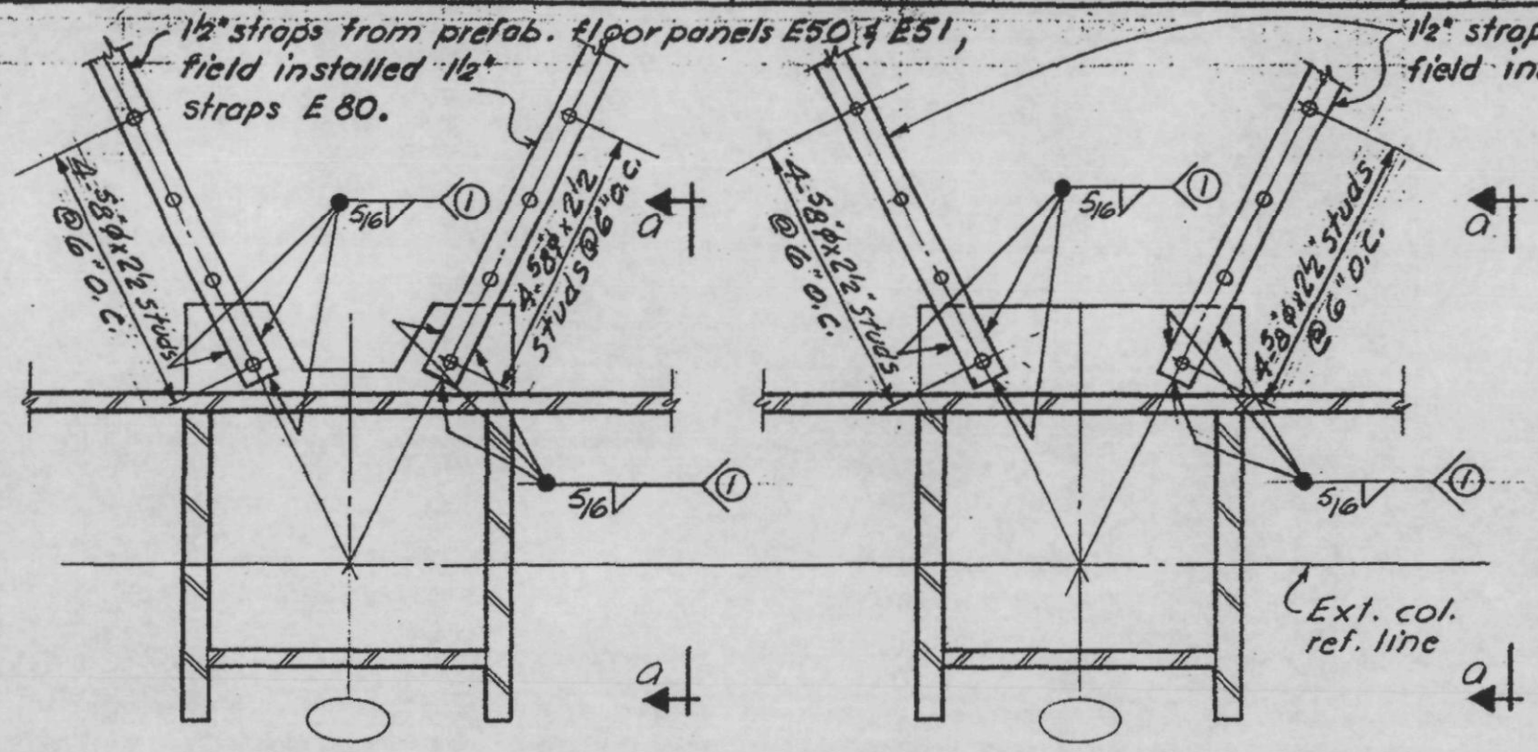

E50, E51, E80

E52, E81

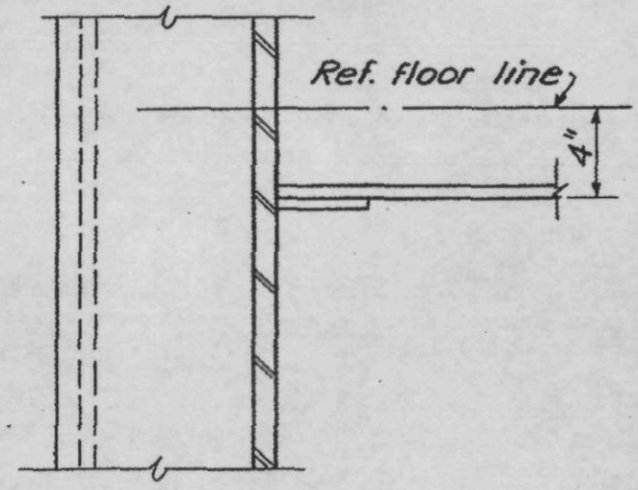

Section a-a

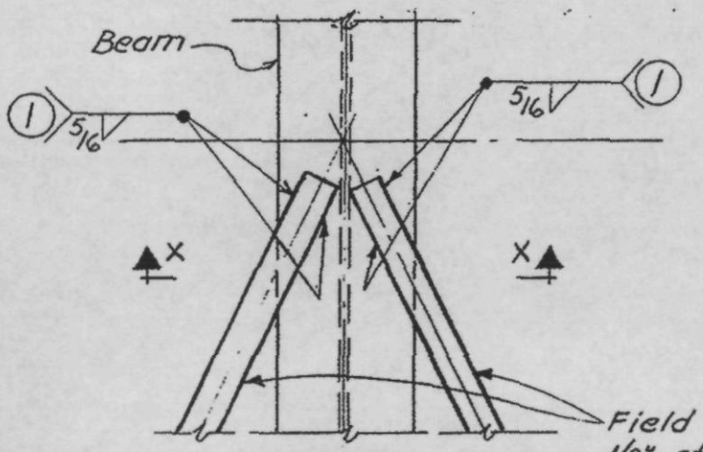

Plan

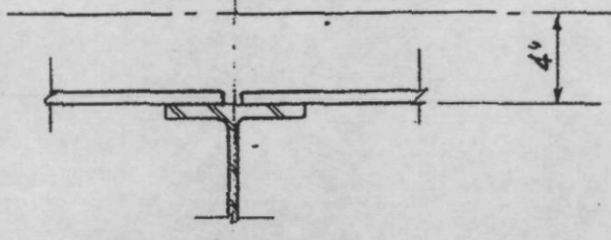

Section x-x

E 82

Beam at -4

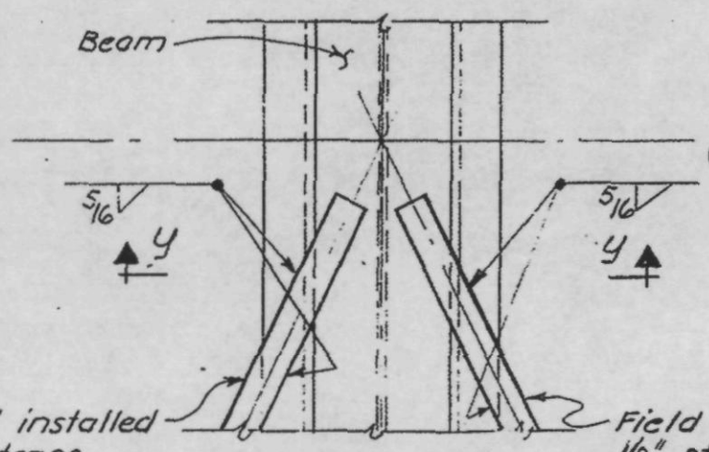

Plan

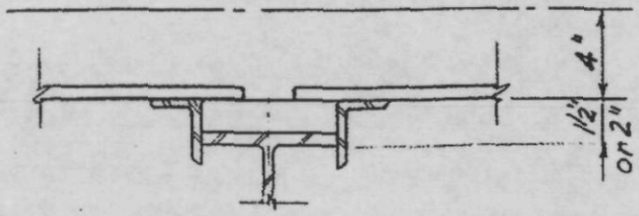

Section y-y

E 82

Beam at -5½ or 6

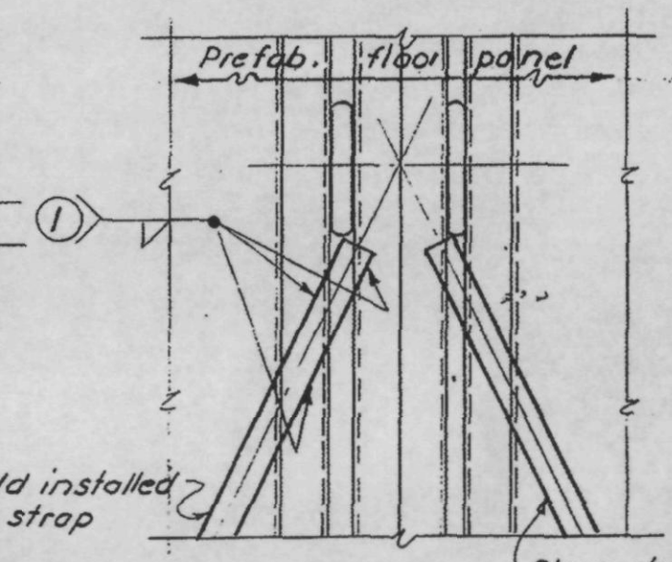

E 83

Note (1) Min. length of weld 6".

LICENSED PROFESSIONAL ENGINEER
LESLIE E. ROBERTSON
No. 34360
CITY OF THE STATE OF NEW YORK

DESIGNED S. Karp

DRAWN A. FRANQUI

REVIEWED W. Brewer

18-AB4-5.1

SKILLING, HELLE, CHRISTIANSEN, ROBERTSON — Structural & Civil Engineers

PROJECT: THE WORLD TRADE CENTER | TITLE: DETAILS E40, E42, E45, E53, E54, E55 | DATE: 2-1-67

REVISIONS

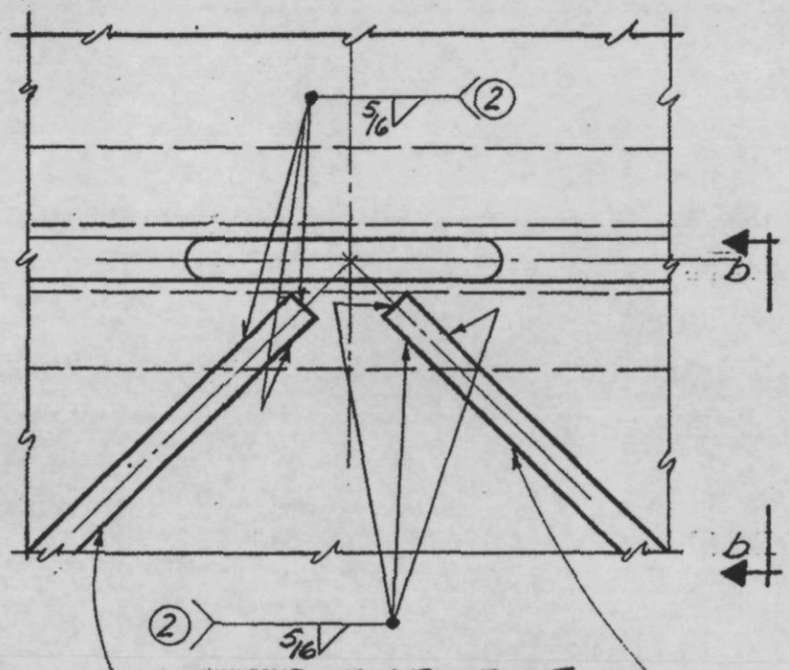

E40, E42, E45

Field installed 1½" straps

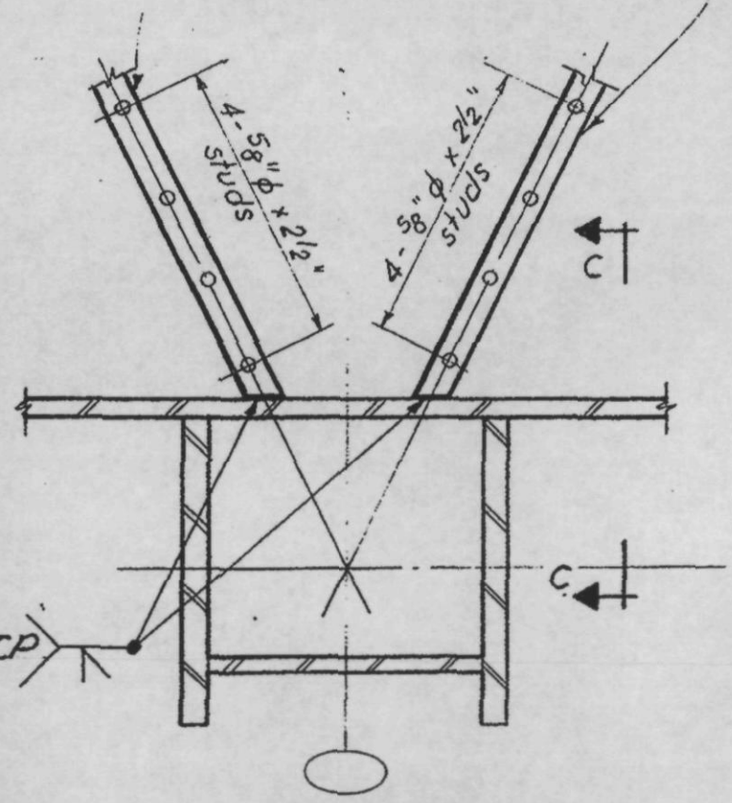

E53, E54, E55

Note ②:
Minimum length of weld 4".

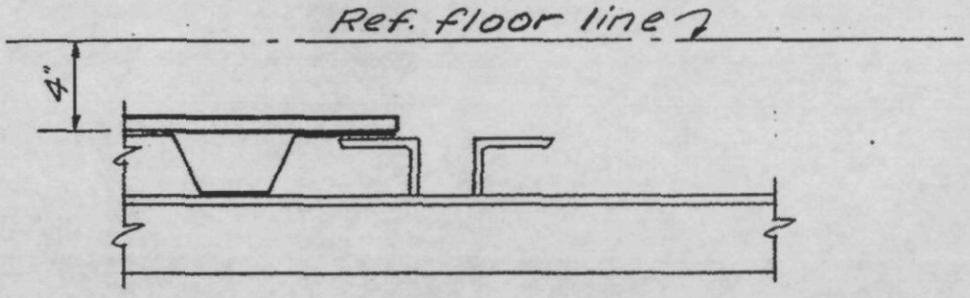

Section b-b

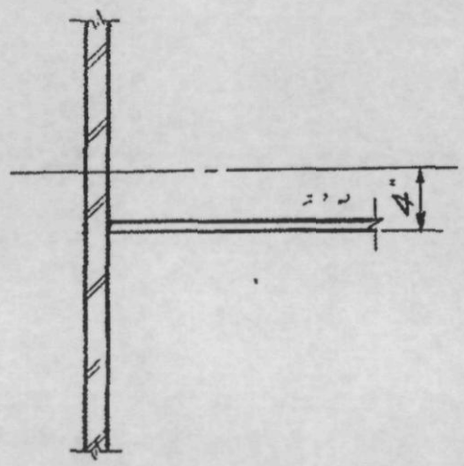

Section c-c

LICENSED PROFESSIONAL ENGINEER — LESLIE E. ROBERTSON — No. 34360 — UNIVERSITY OF THE STATE OF NEW YORK

SIGNED S. Karp

DRAWN A. Franqui

REVIEWED W. Brewer

18-AB4-5.2

SKILLING HELLE CHRISTIANSEN ROBERTSON — Structural & Civil Engineers

PROJECT: THE WORLD TRADE CENTER

TITLE: DETAILS E44, E56, E57, E58, E59, E84

DATE: 2-7-69

REVISIONS

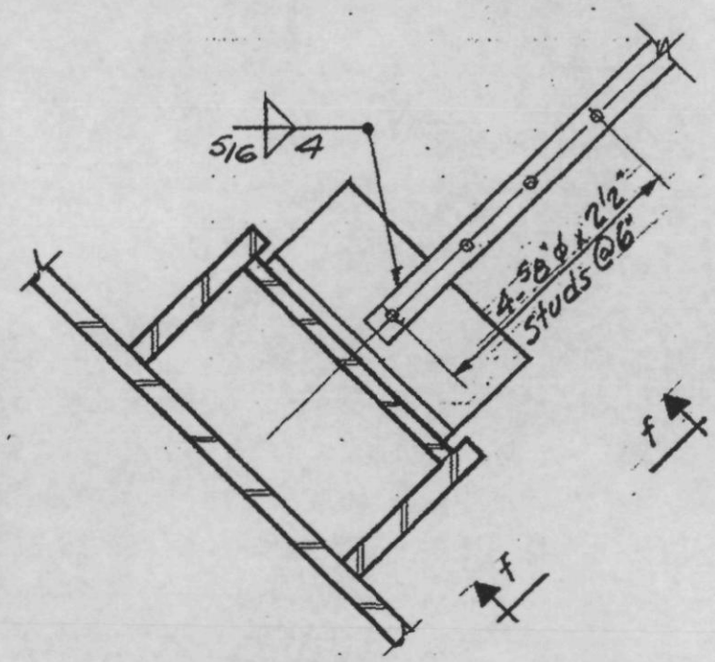

E59

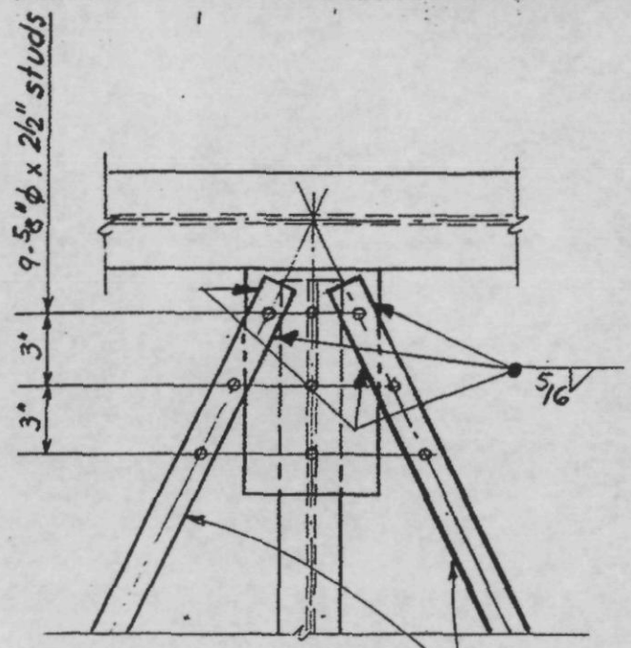

E 84

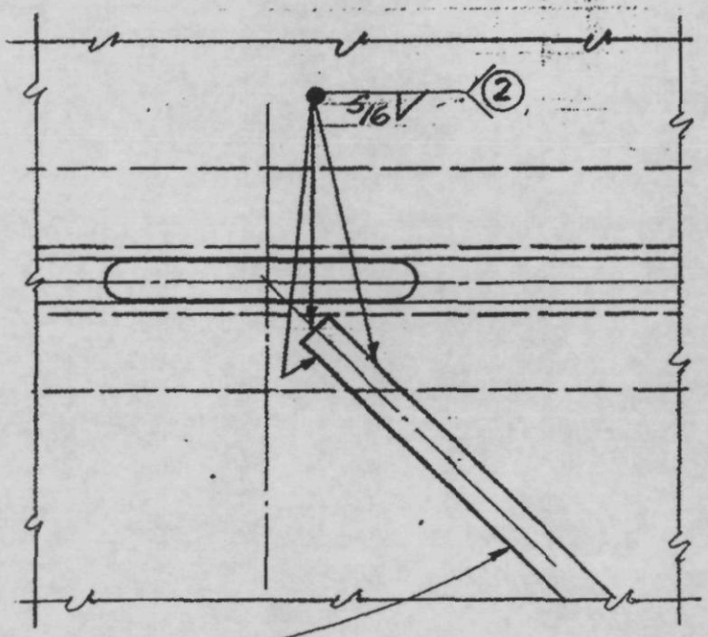

E44

Field installed ½" straps

Field installed ½" strap

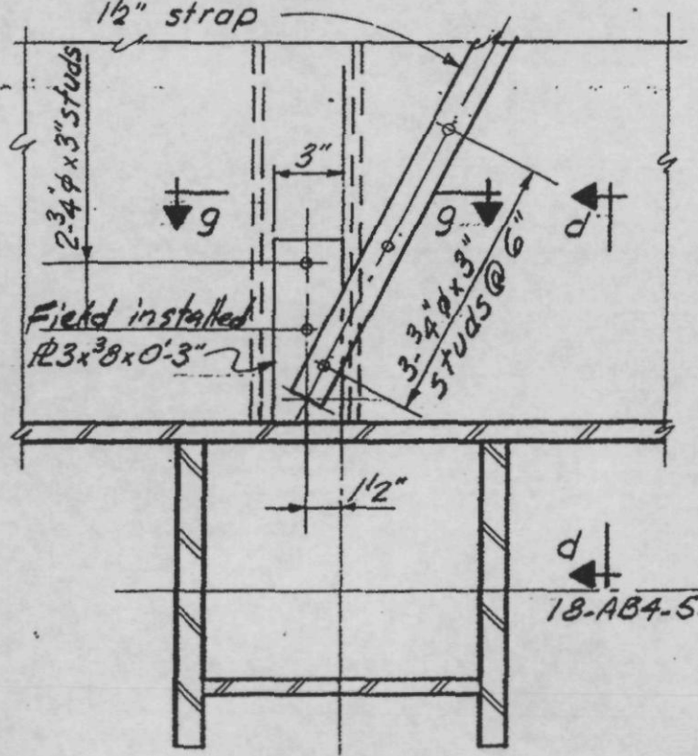

E58

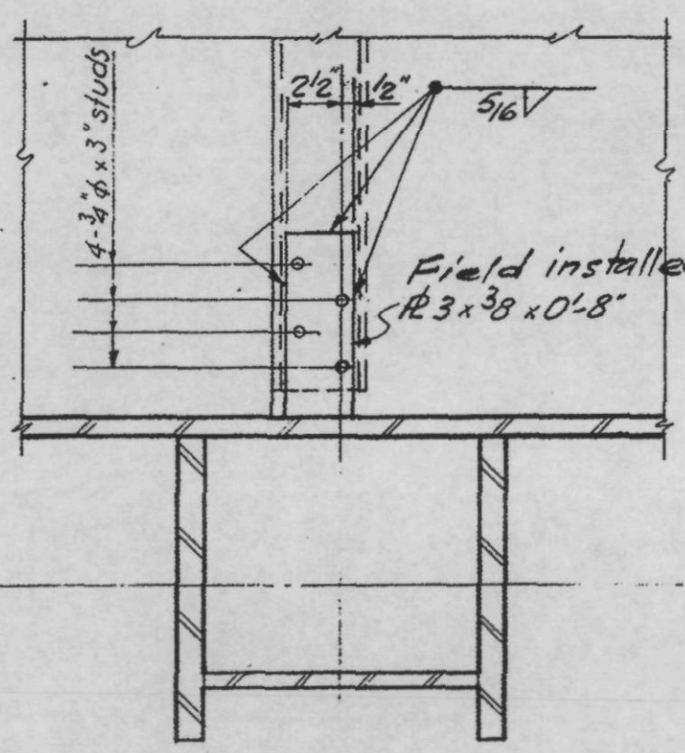

E57

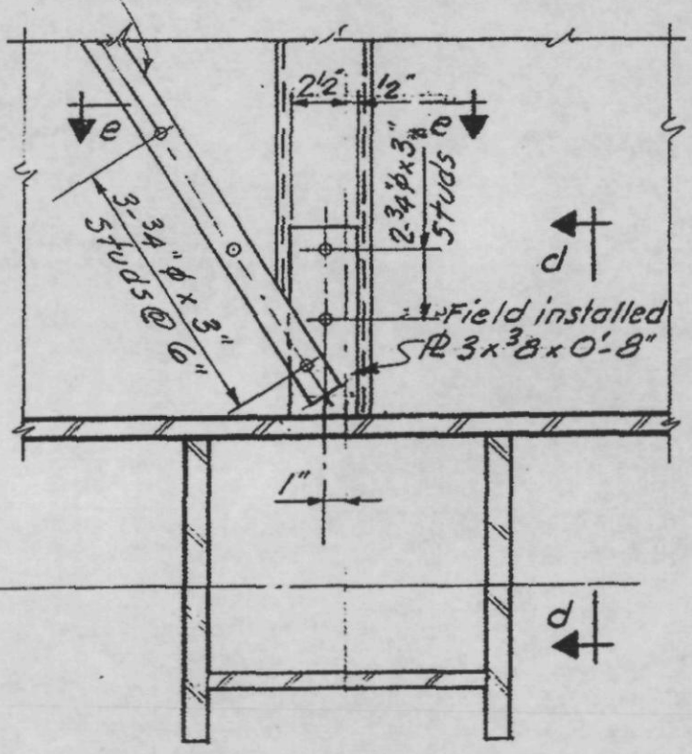

E56

LICENSED PROFESSIONAL ENGINEER — LESLIE E. ROBERTSON — No. 34360 — UNIVERSITY OF THE STATE OF NEW YORK

DESIGNED: S. Karp

DRAWN: A. Franqui

REVIEWED: W. Brewer

18-AB4-5.3

SKILLING, HELLE, CHRISTIANSEN, ROBERTSON — Structural & Civil Engineers

PROJECT: THE WORLD TRADE CENTER | TITLE: SECTIONS | DATE: 2-7-69

REVISIONS

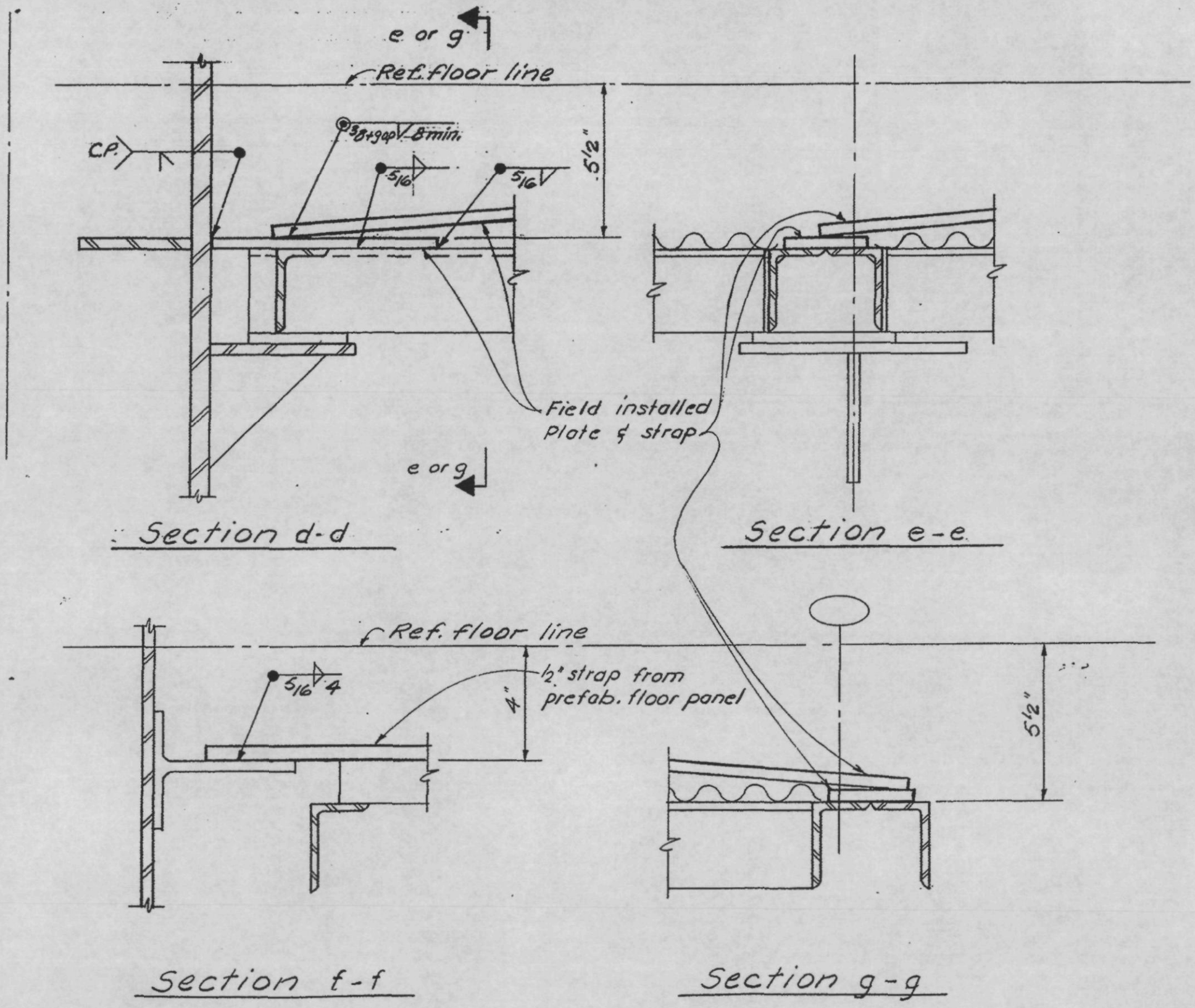

LICENSED PROFESSIONAL ENGINEER
LESLIE E. ROBERTSON
No. 34360
UNIVERSITY OF THE STATE OF NEW YORK

SIGNED S. Karp

DRAWN A. Franqui

REVIEWED W. Brewer

18-AB4-5.4

SKILLING, HELLE, CHRISTIANSEN, ROBERTSON — Structural & Civil Engineers

PROJECT: THE WORLD TRADE CENTER | TITLE: DETAIL ES1D, ES2D | DATE: 2-1-69

REVISIONS

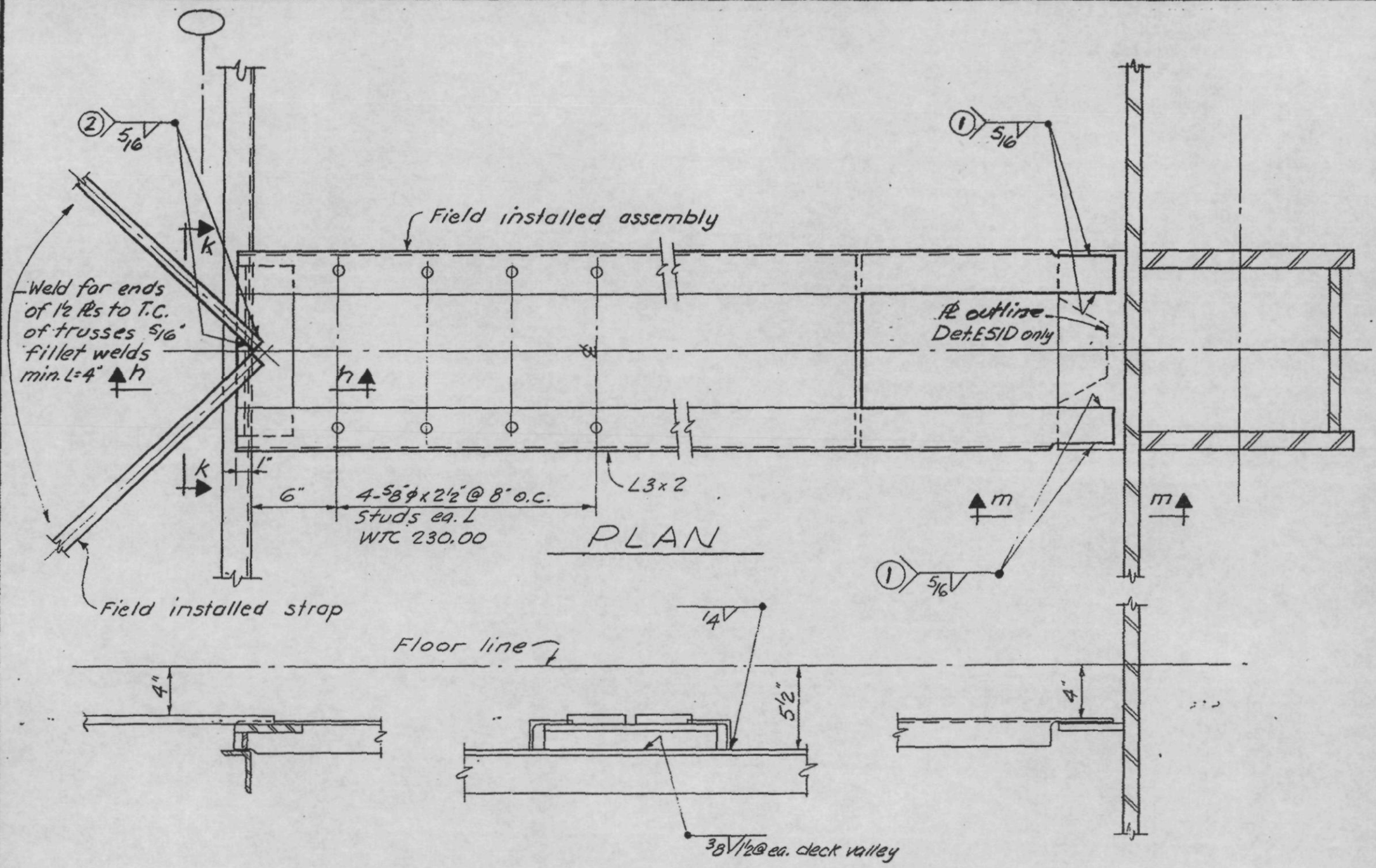

LICENSED PROFESSIONAL ENGINEER — LESLIE E. ROBERTSON — No. 34360 — UNIVERSITY OF THE STATE OF NEW YORK

DESIGNED: S. Karp
DRAWN: A. Franqui
REVIEWED: W. Brewer

18-AB4-5.5

SKILLING, HELLE, CHRISTIANSEN, ROBERTSON — Structural & Civil Engineers

PROJECT: THE WORLD TRADE CENTER | TITLE: DETAIL E-54A | DATE: 2-1-69

REVISIONS

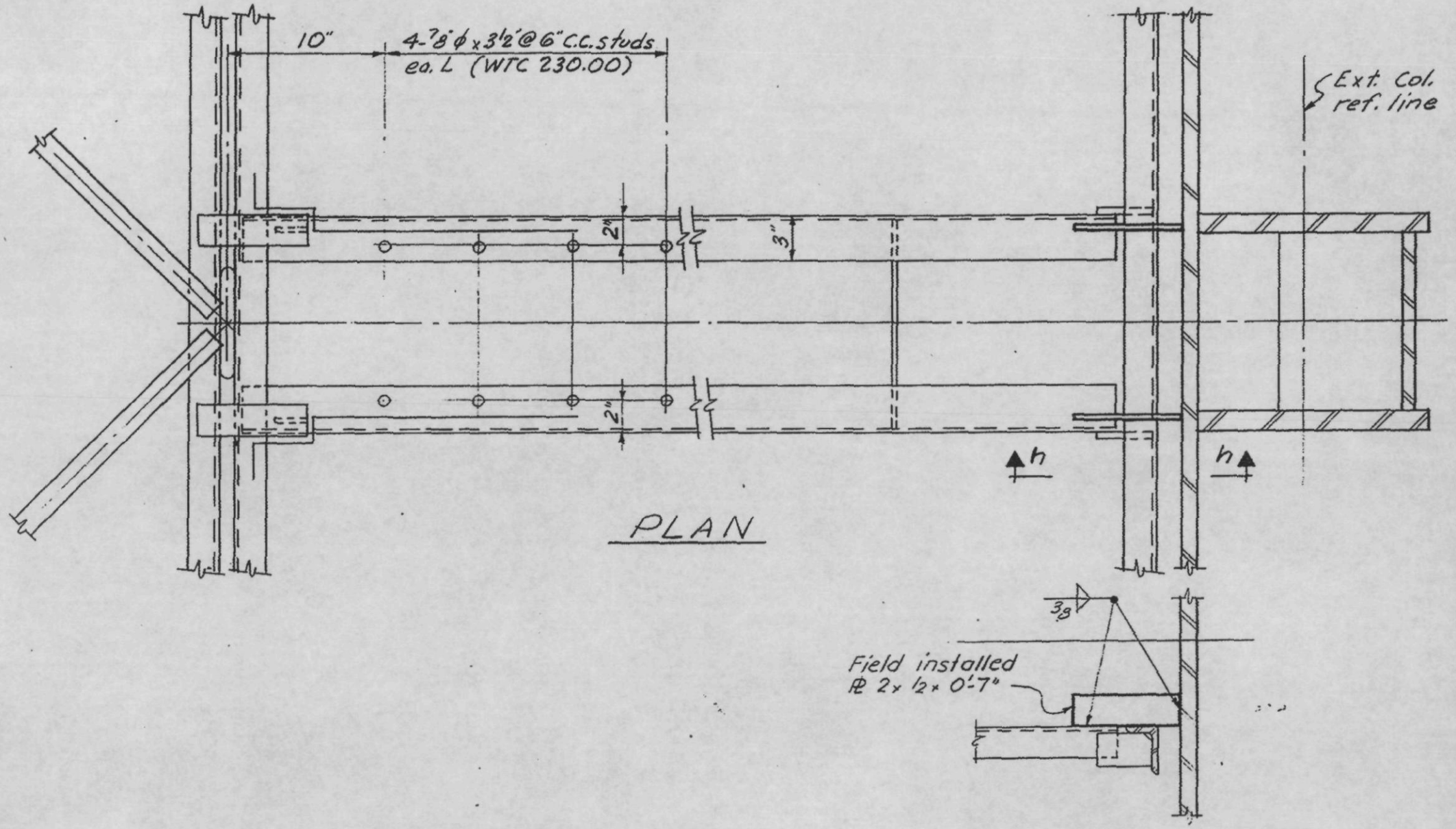

PLAN

Section h-h

LICENSED PROFESSIONAL ENGINEER
LESLIE E. ROBERTSON
No. 34360
UNIVERSITY OF THE STATE OF NEW YORK

DESIGNED
J. Karp

DRAWN
A. Franqui

REVIEWED
W. Brewer

18-AB4-5.6

SKILLING, HELLE, CHRISTIANSEN, ROBERTSON — Structural & Civil Engineers

PROJECT: THE WORLD TRADE CENTER | TITLE: DETAIL E59A | DATE: 2-1-69

REVISIONS

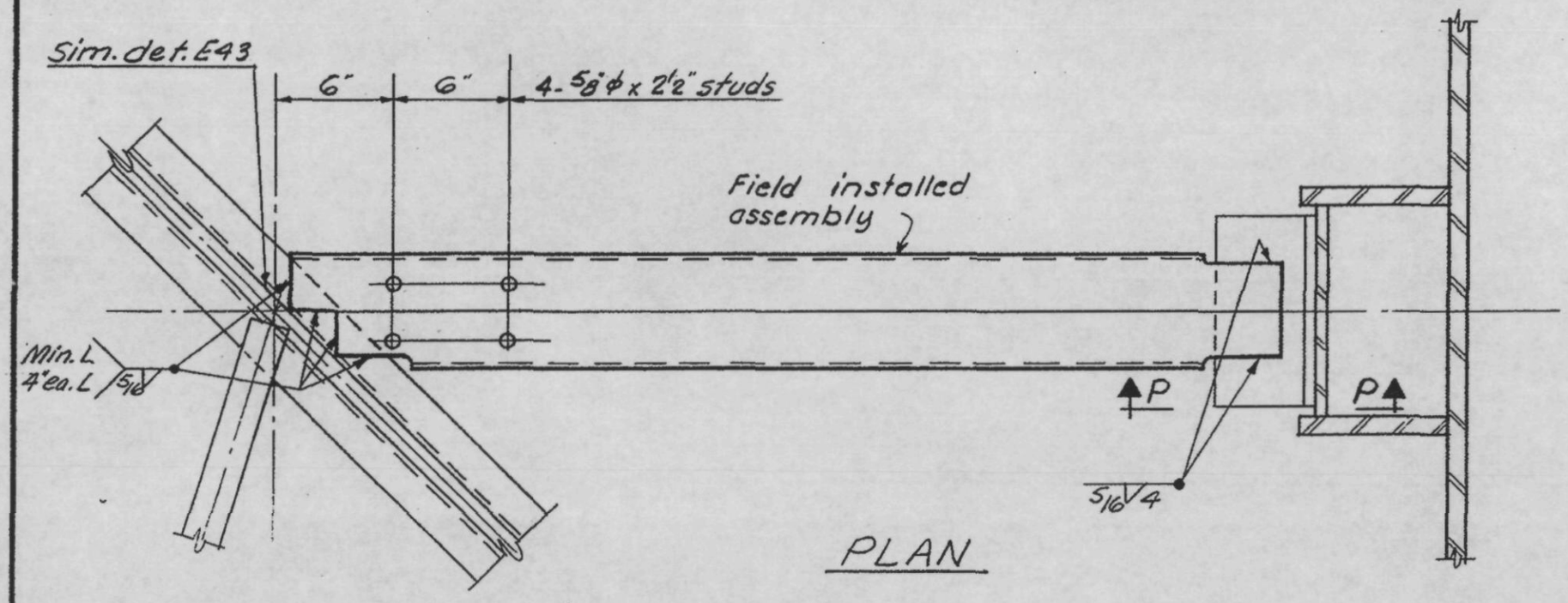

PLAN

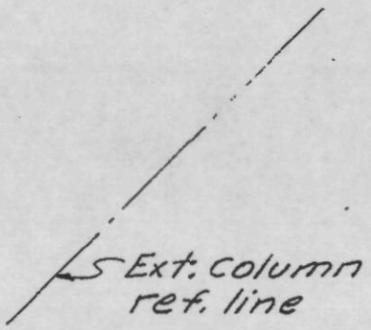

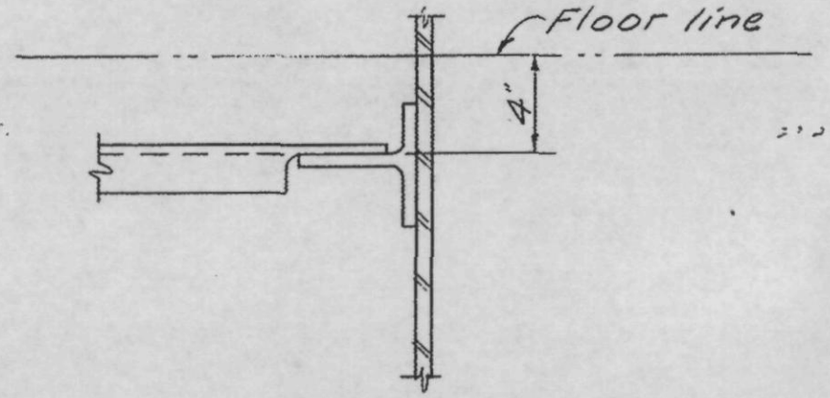

Section p.-p

LICENSED PROFESSIONAL ENGINEER
LESLIE E. ROBERTSON
No. 34360
UNIVERSITY OF THE STATE OF NEW YORK

SIGNED S. Karp
DRAWN A. Franqui
REVIEWED W. Brewer

18-AB4-5.7

SKILLING, HELLE, CHRISTIANSEN, ROBERTSON — Structural & Civil Engineers

PROJECT: THE WORLD TRADE CENTER | TITLE: DETAILS 159, 160, 161, 161A, 163 & 163C | DATE: 2-7-69

REVISIONS

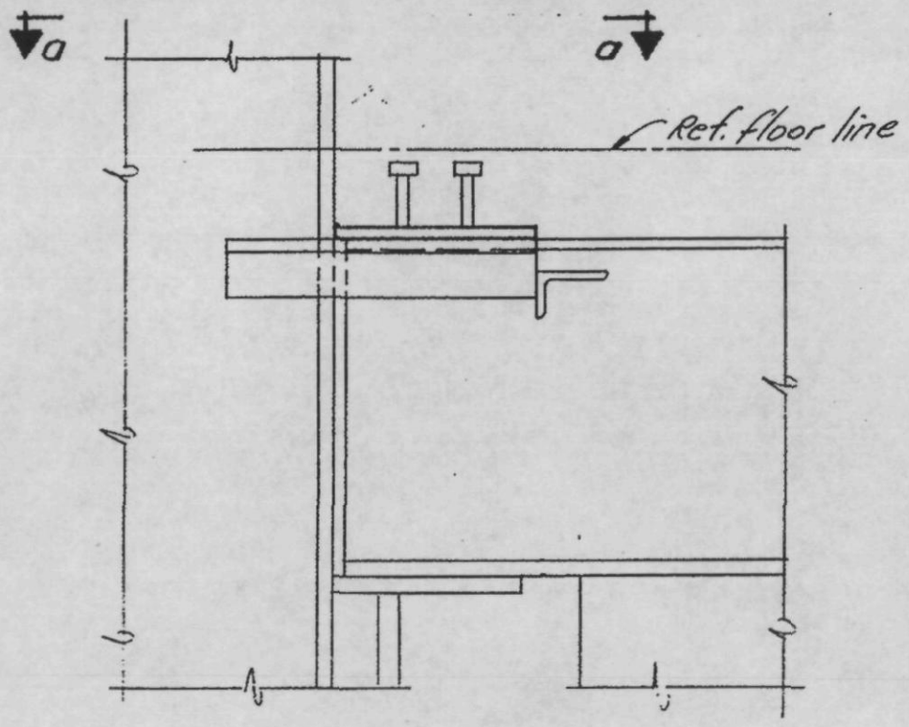

Detail 159, 160, 161

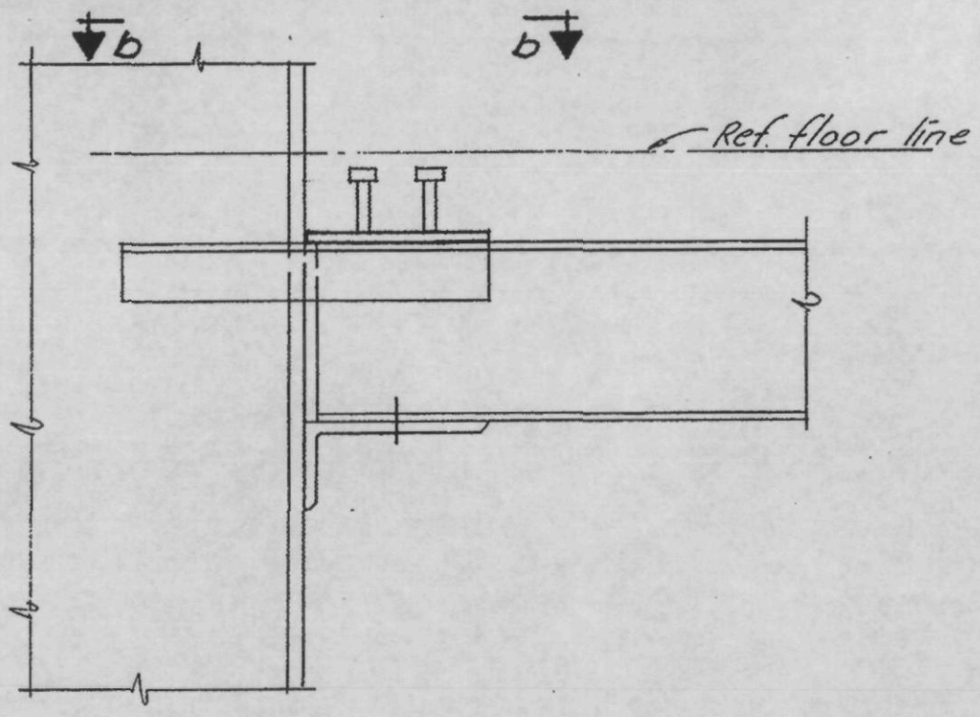

Detail 163 & 163C

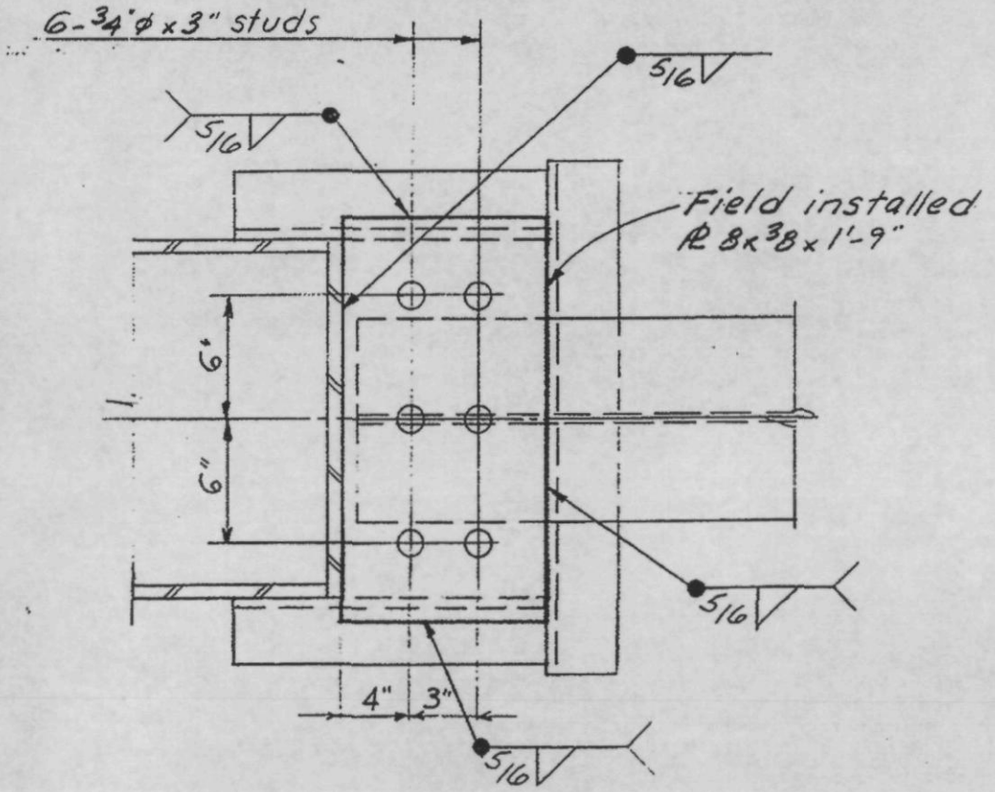

Plan a-a

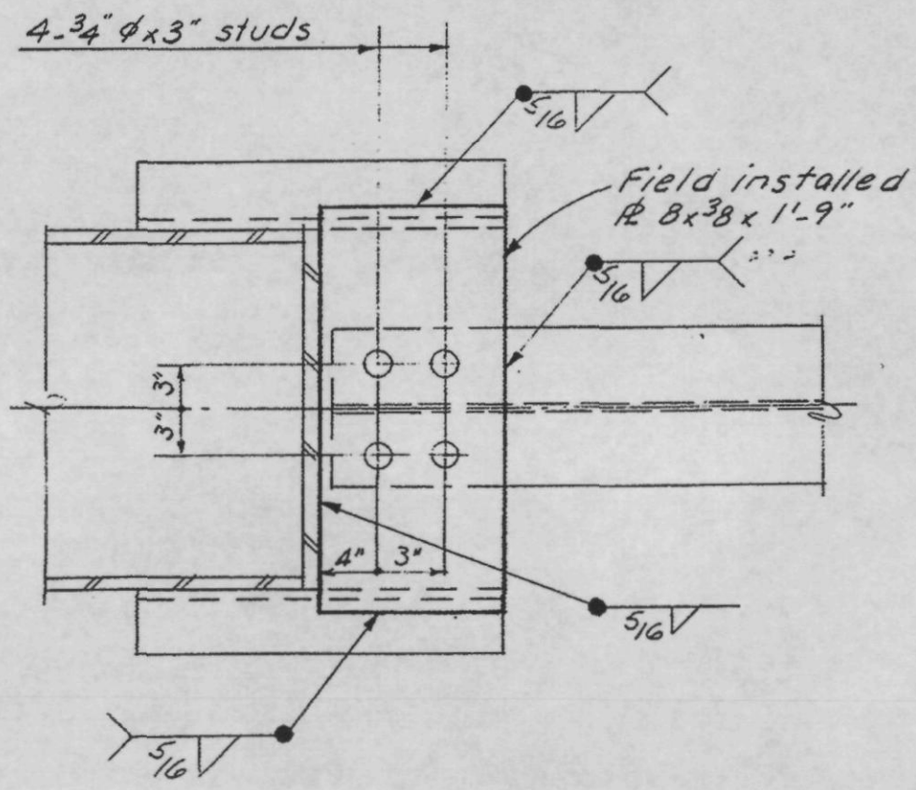

Plan b-b

LICENSED PROFESSIONAL ENGINEER — LESLIE E. ROBERTSON — No. 34360 — UNIVERSITY OF THE STATE OF NEW YORK

DESIGNED S. Karp
DRAWN J. Adams
REVIEWED W. Brewer

18-AB4-6.1

SKILLING, HELLE, CHRISTIANSEN, ROBERTSON — Structural & Civil Engineers

PROJECT: THE WORLD TRADE CENTER | TITLE: DETAILS 150-158, 162, 164-169, 163A, B | DATE: 2.2.69

REVISIONS

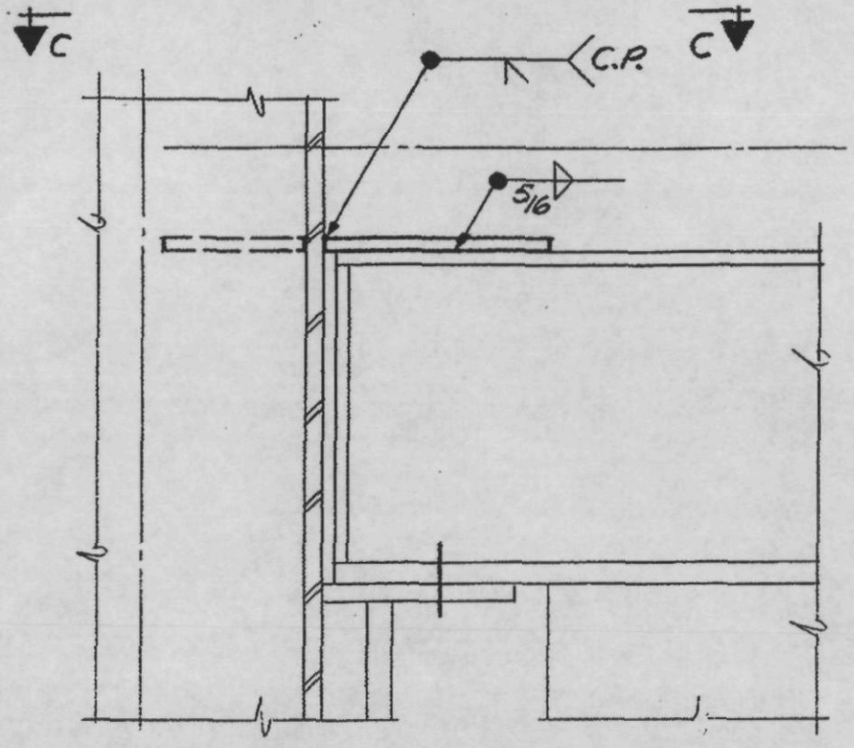

150-158, 162, 164-169

Field installed PL,
PL 5 x 3/8 x 1'-0" for 164, 164A, 165
PL 6 x 3/8 x 1'-0" for all others

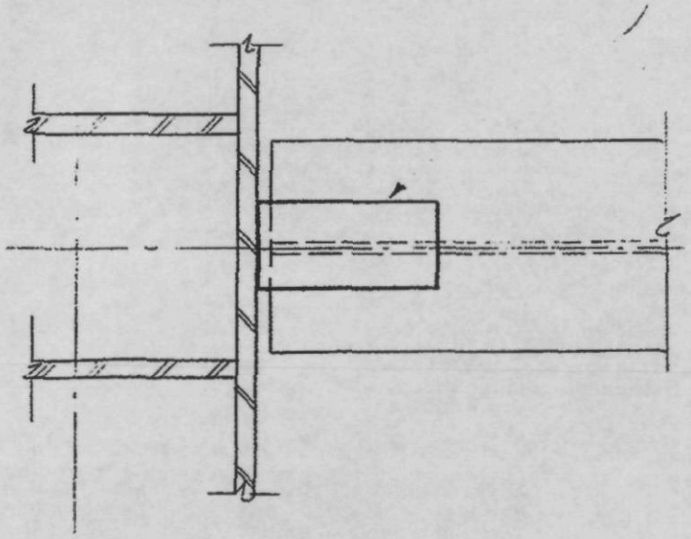

Plan c-c

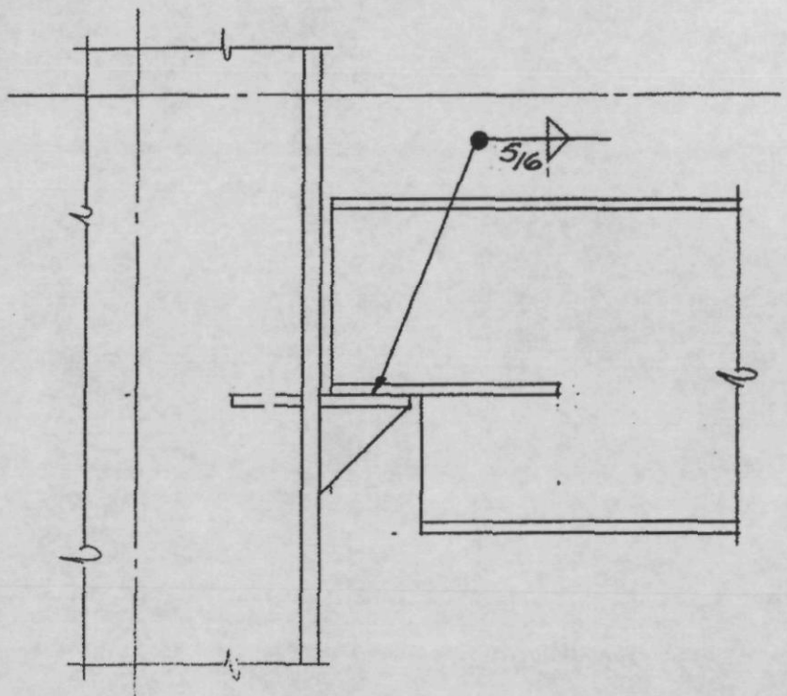

163A

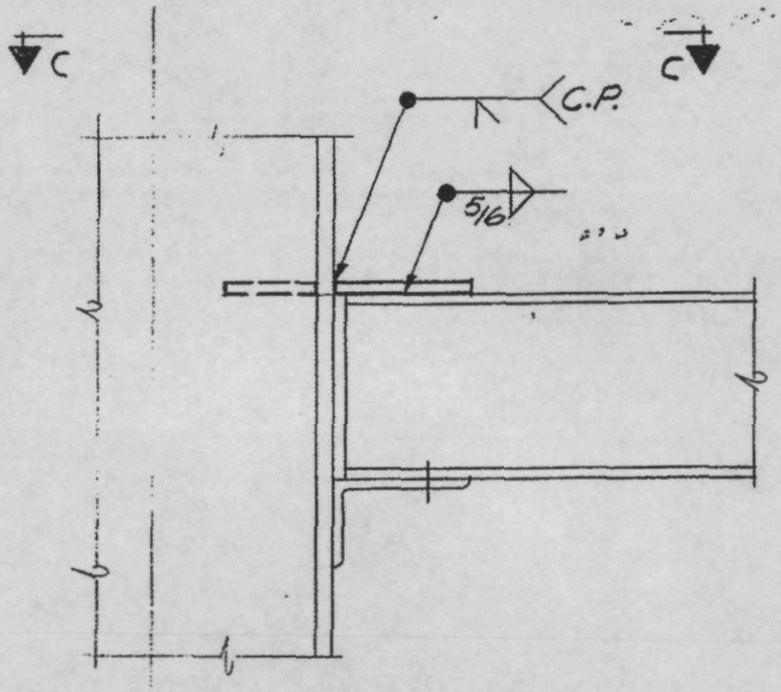

163B

LICENSED PROFESSIONAL ENGINEER
LESLIE E. ROBERTSON
No. 34360
THE STATE OF NEW YORK

DESIGNED S. Kaip
DRAWN J. Adams
REVIEWED W. Brewer

18-A84-6.2

SKILLING HELLE CHRISTIANSEN, ROBERTSON — Structural & Civil Engineers

PROJECT THE WORLD TRADE CENTER | TITLE DETAILS 8.4, 8.10 & 8.X | DATE 11/11/69

REVISIONS

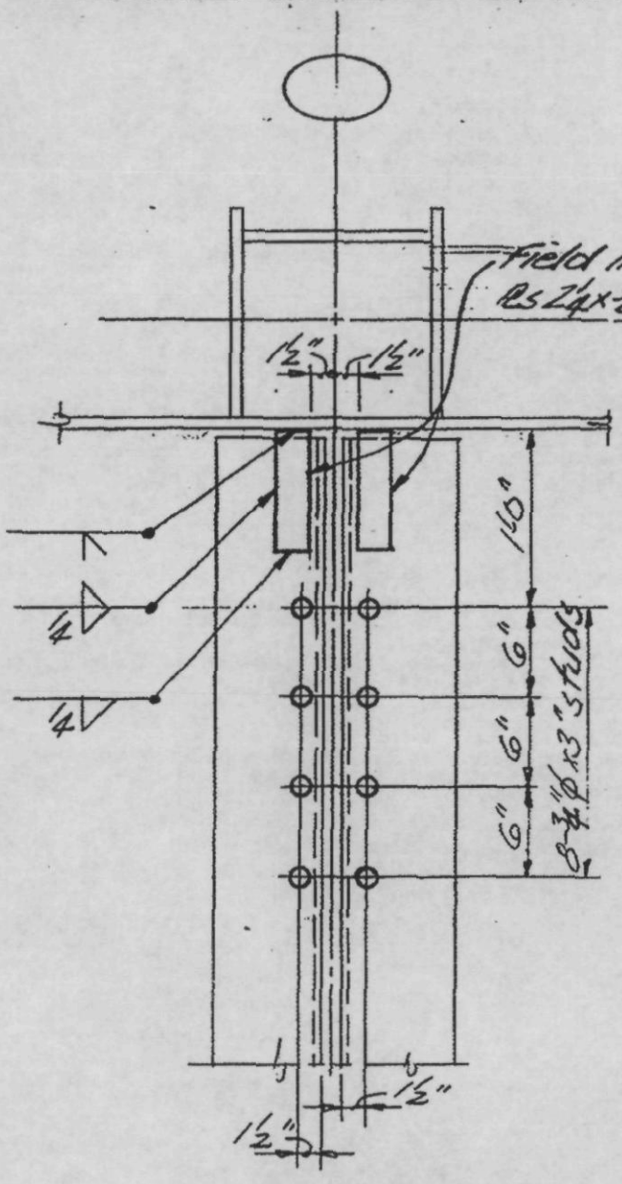

Detail 8.4

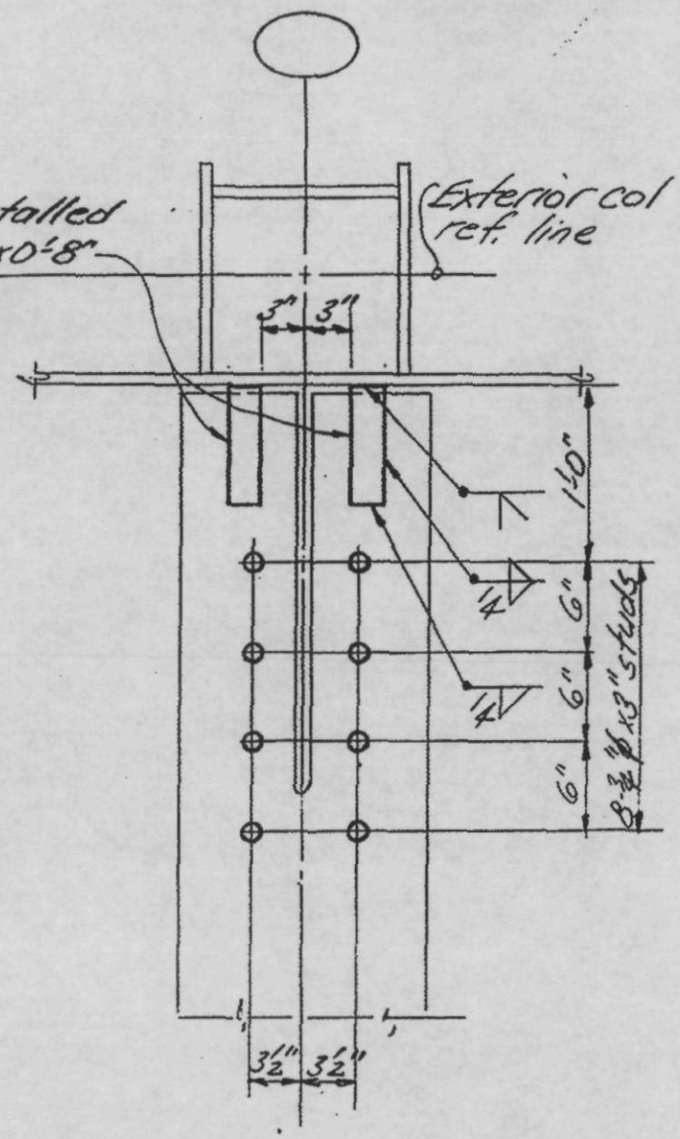

Detail 8.10

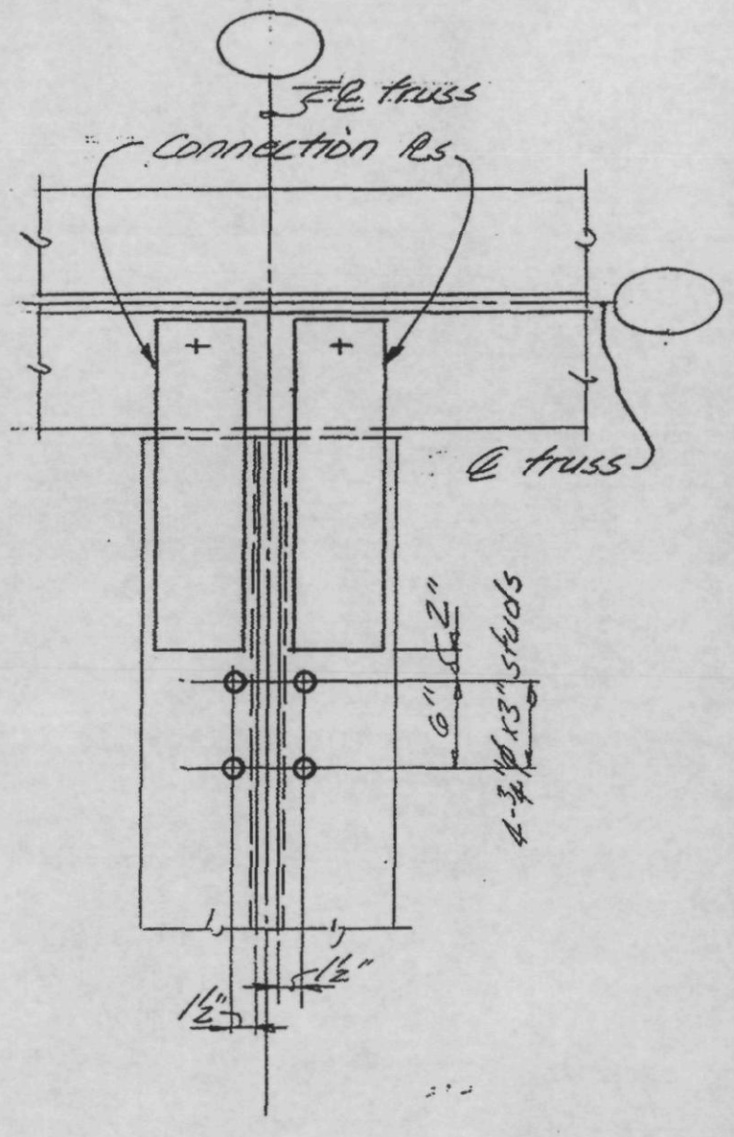

Detail 8.X

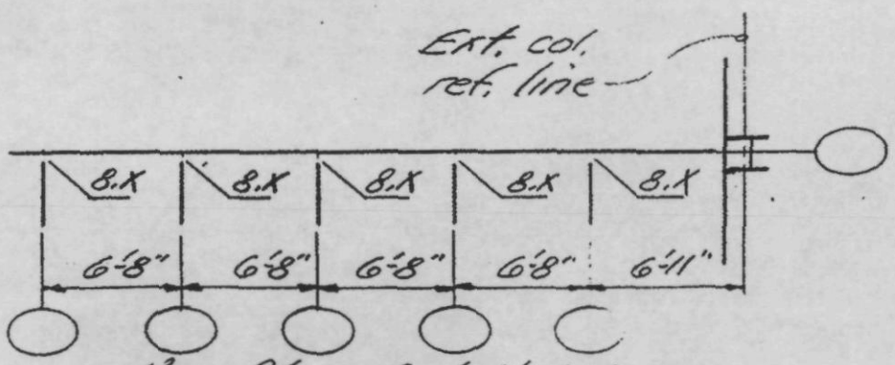

Key Plan Detail 8.X

see 18-AB3-4.3, 4.4 & 4.5 for locations

LICENSED PROFESSIONAL ENGINEER
LESLIE E. ROBERTSON
No. 34960
UNIVERSITY OF THE STATE OF NEW YORK

DESIGNED

DRAWN

REVIEWED

18-AB4-7.1

SKILLING HELLE CHRISTIANSEN ROBERTSON — Structural & Civil Engineers

PROJECT: WORLD TRADE CENTER | TITLE: DETAILS 10.1A, 10.1B & 10.1C | DATE: 11/7/69

REVISIONS

12/3/69

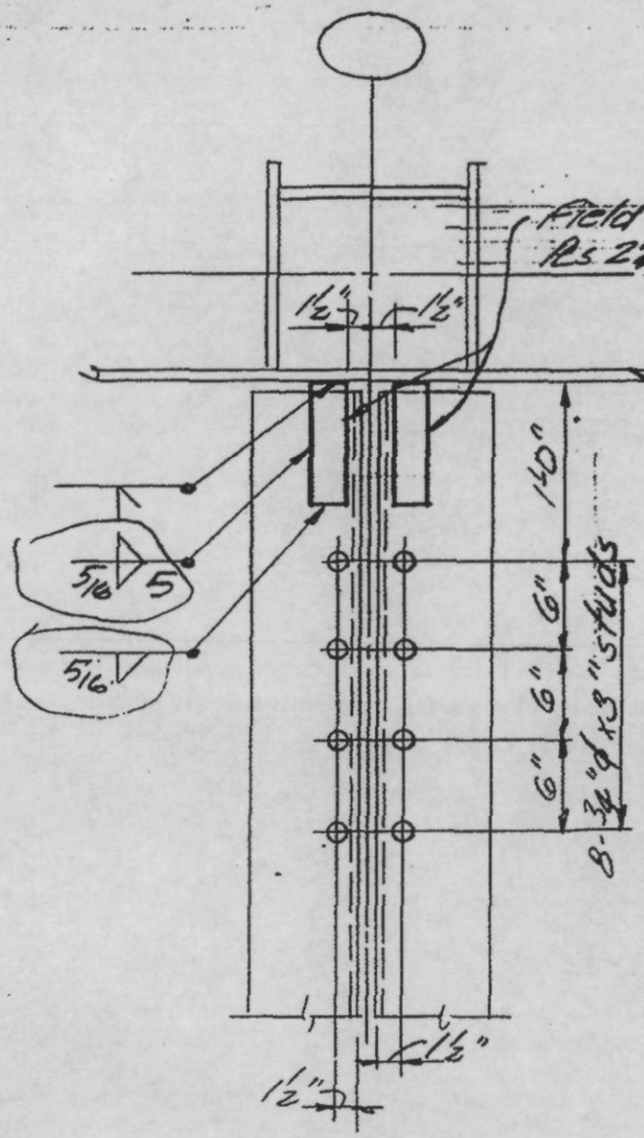

Detail 10.1A

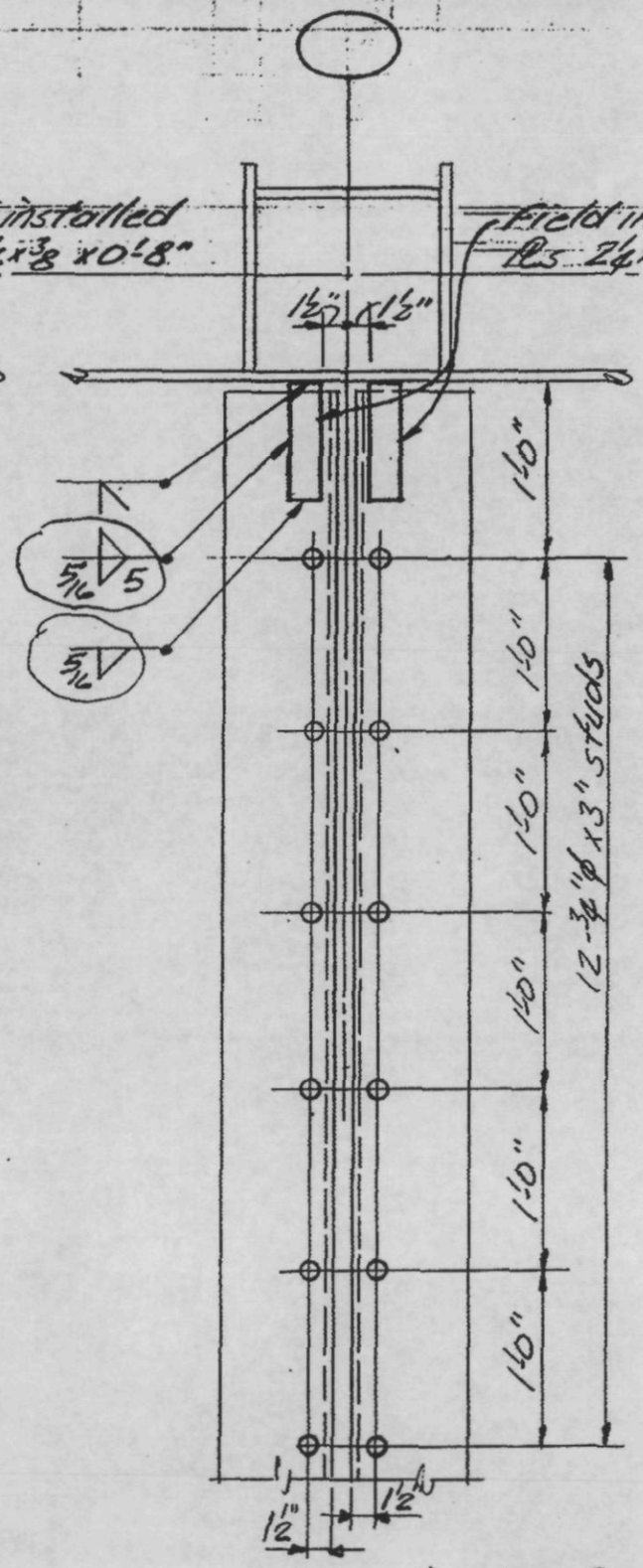

Detail 10.1B

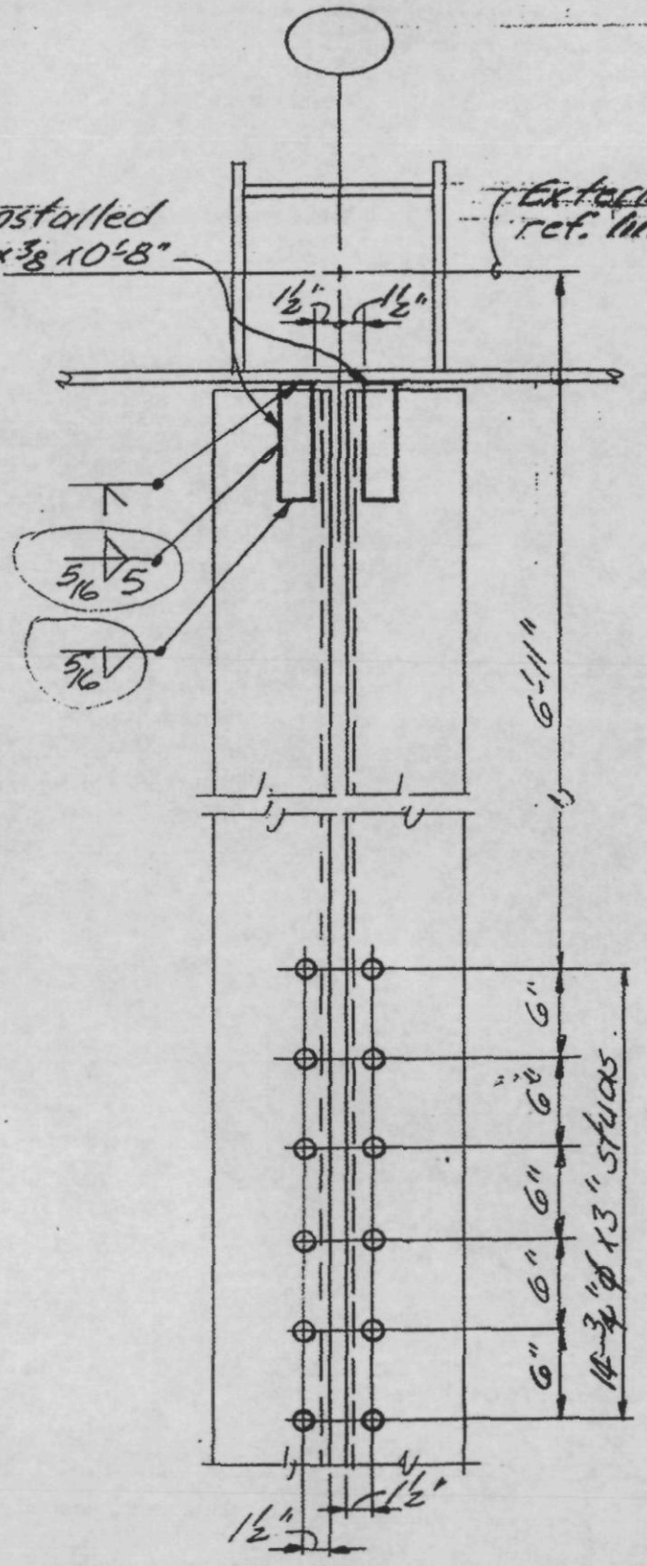

Detail 10.1C

LICENSED PROFESSIONAL ENGINEER
LESLIE E. ROBERTSON
No. 34360
UNIVERSITY OF THE STATE OF NEW YORK

DESIGNED

DRAWN

REVIEWED W. Brewer

18-AB4-7.2

SKILLING HELLE CHRISTIANSEN ROBERTSON — Structural & Civil Engineers

PROJECT: [illegible] TRADE CENTER | TITLE: DETAILS 10.1A & 10.2B, 10.3A, 10.3B, 10.3C, 10.4A & 10.4B | DATE: 11/7/69

REVISIONS
12/3/69

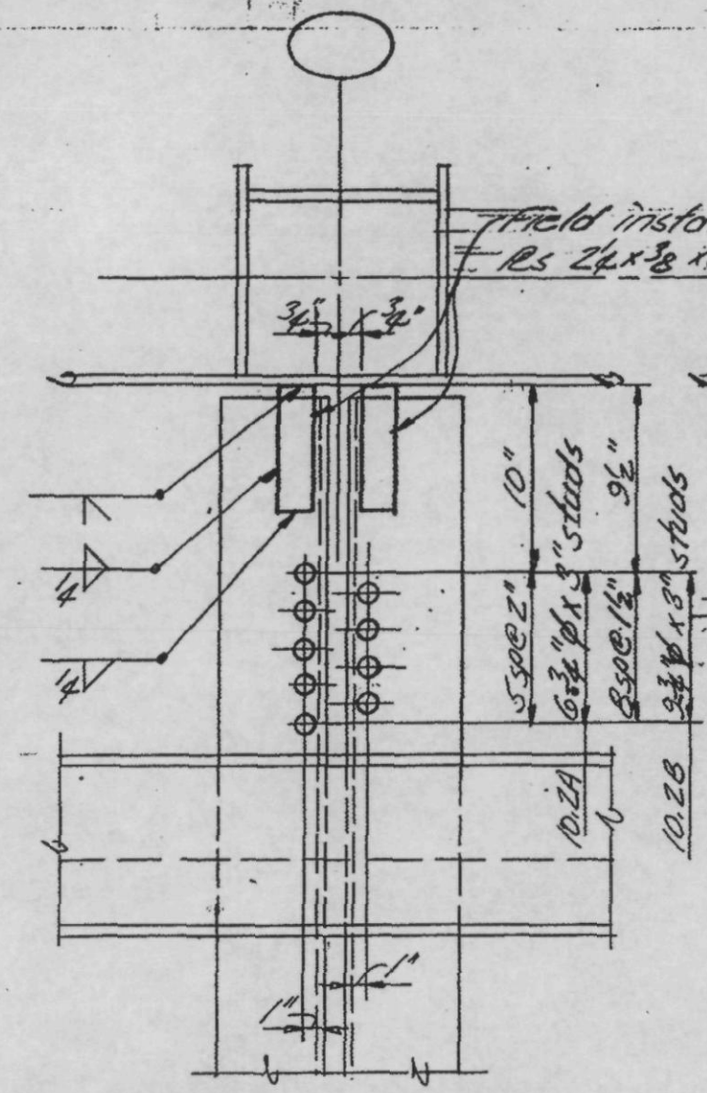

Detail 10.2A & 10.2B

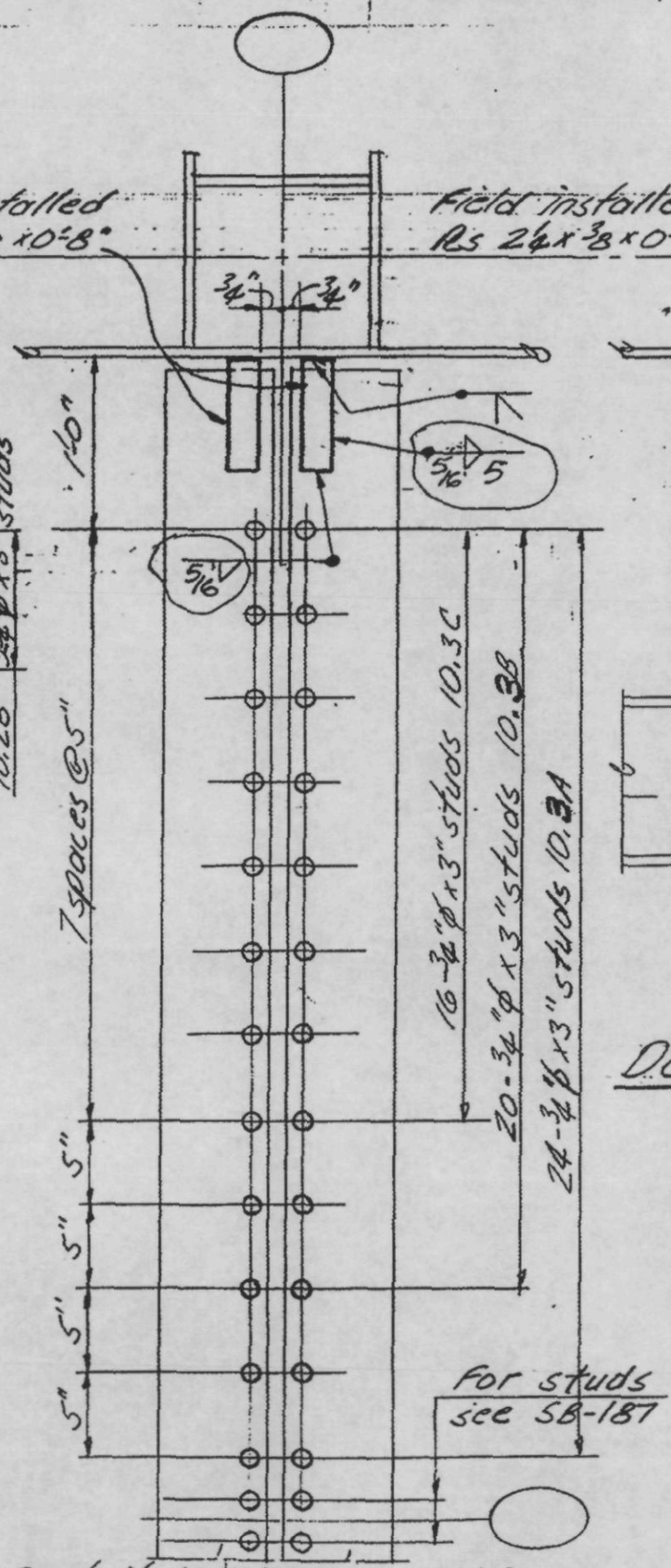

Detail 10.3A, 10.3B, 10.3C

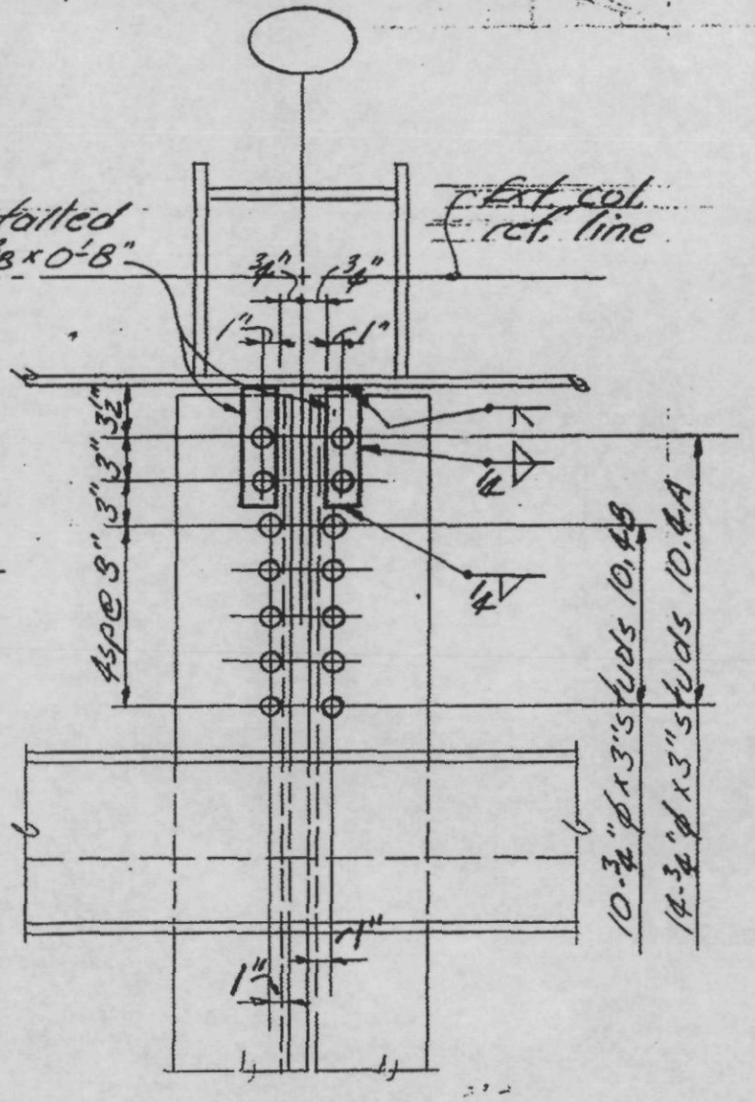

Detail 10.4A & 10.4B

LICENSED PROFESSIONAL ENGINEER
LESLIE E. ROBERTSON
No. 34360
UNIVERSITY OF THE STATE OF NEW YORK

DESIGNED
DRAWN
REVIEWED W. Brewer

18-AB4-7.3

SKILLING HELLE CHRISTIANSEN ROBERTSON — Structural & Civil Engineers

PROJECT: THE WORLD TRADE CENTER | TITLE: DETAILS 12.1 - 12.5, 12.9 & 12.10 | DATE: 11/7/69

REVISIONS

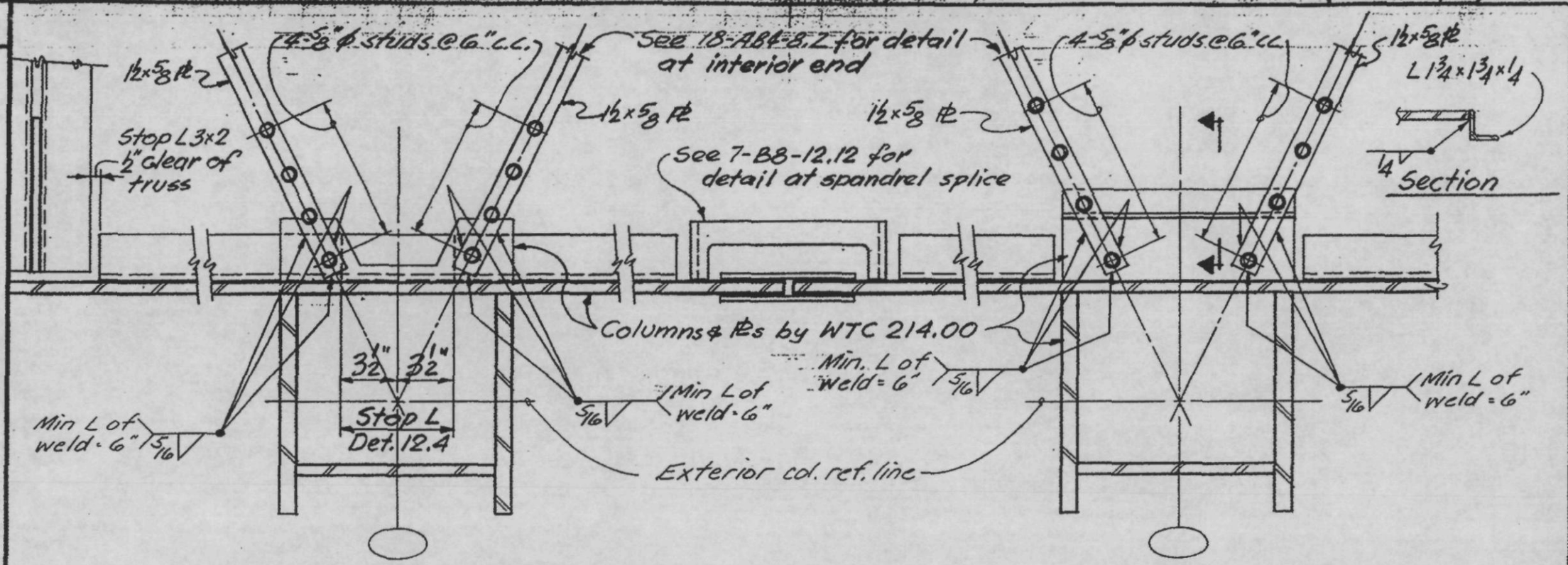

DETAIL 12.1 & 12.4

DETAIL 12.2

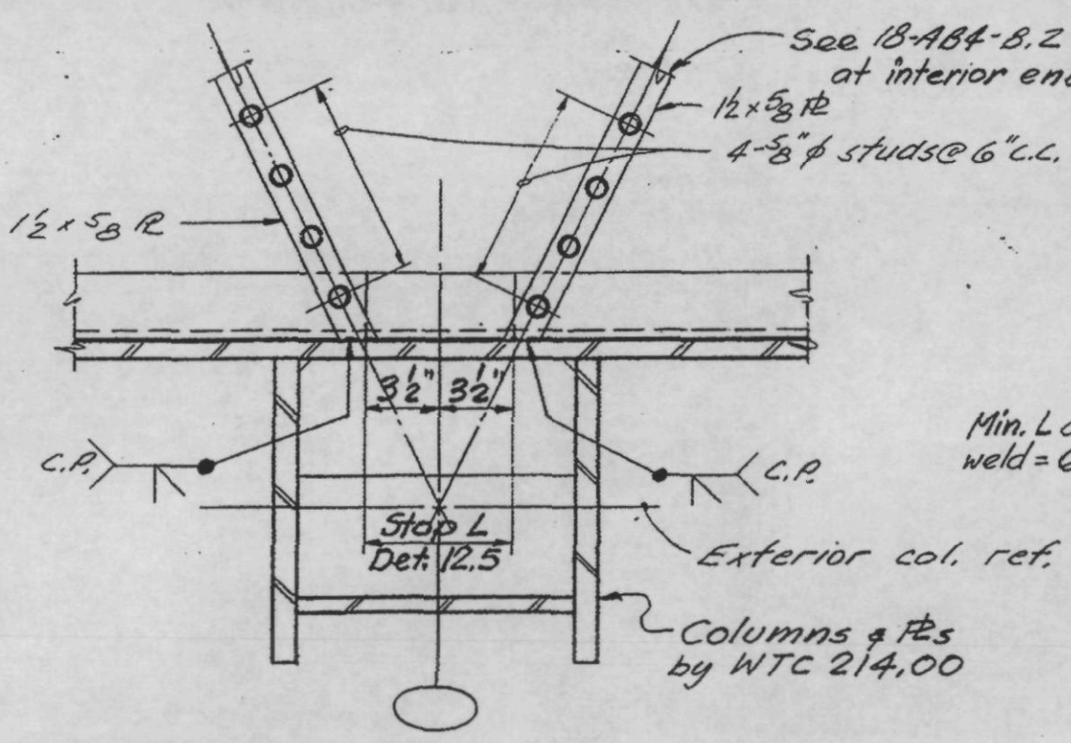

DETAIL 12.3 & 12.5

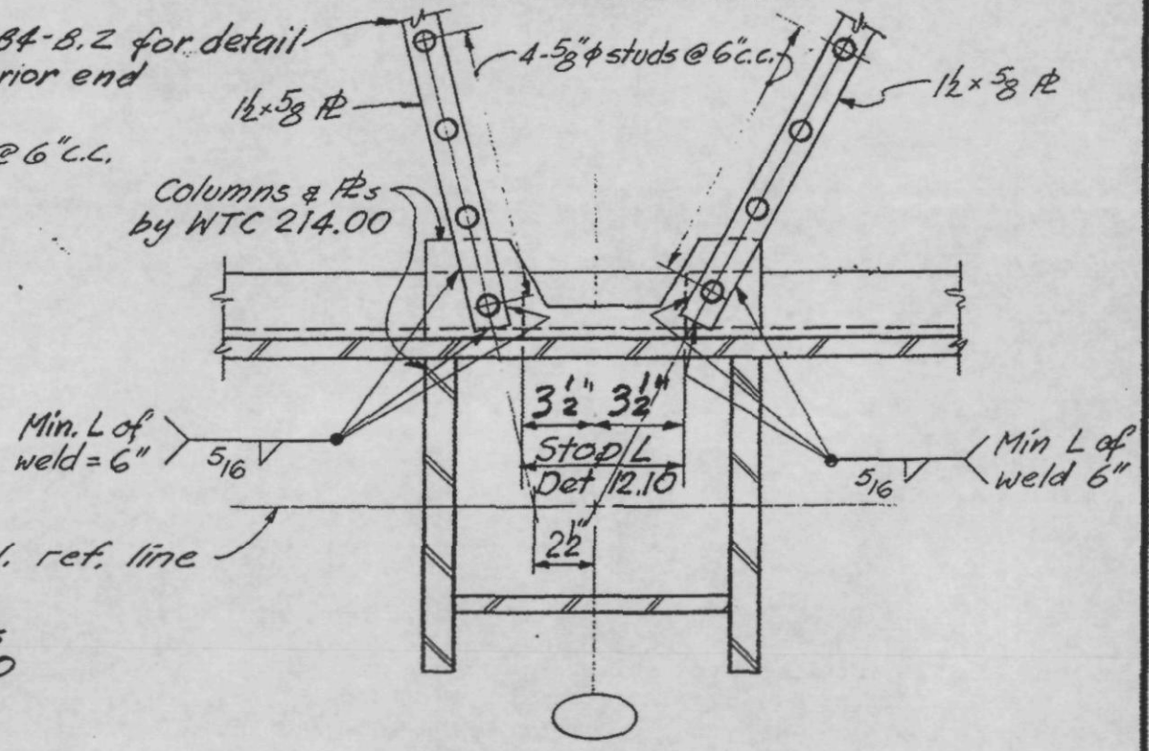

DETAIL 12.9 & 12.10

LICENSED PROFESSIONAL ENGINEER — LESLIE E. ROBERTSON — No. 34360 — UNIVERSITY OF THE STATE OF NEW YORK

SIGNED

DRAWN J. Adams

REVIEWED W. Brewer

13-AB4-8.1

SKILLING, HELLE, CHRISTIANSEN, ROBERTSON — Structural & Civil Engineers

PROJECT: THE WORLD TRADE CENTER | TITLE: DETAILS 12.6, 12.7 & 12.8 | DATE: 11/7/69

REVISIONS

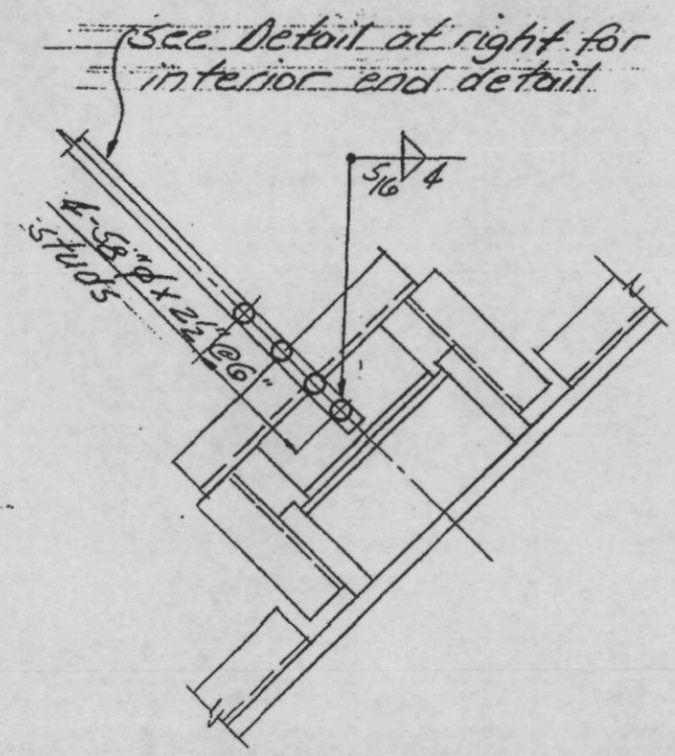

Detail 12.6 & 12.7

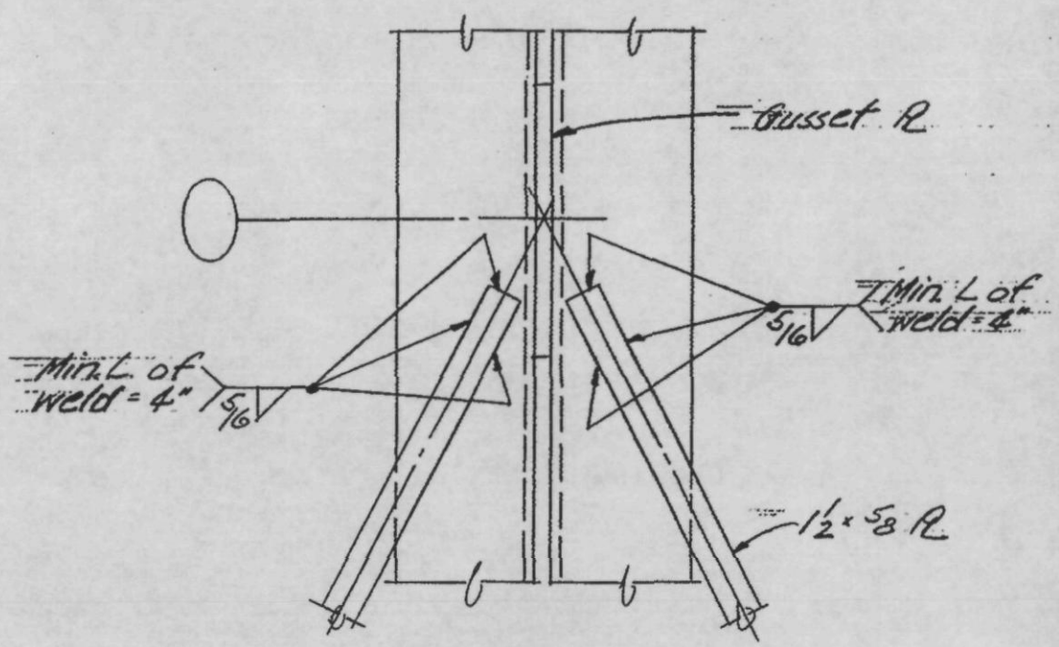

Interior Detail Parallel to Truss

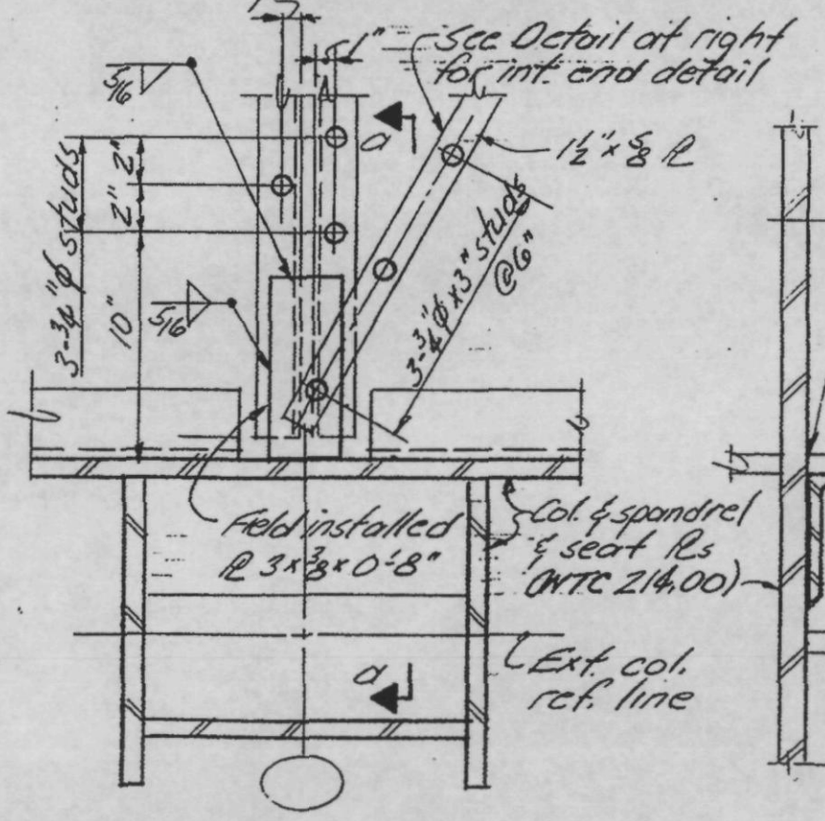

Detail 12.8

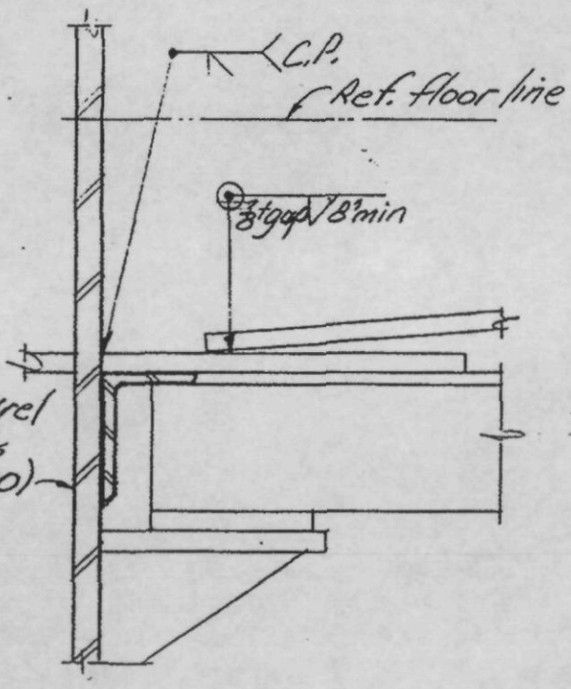

Section a-a

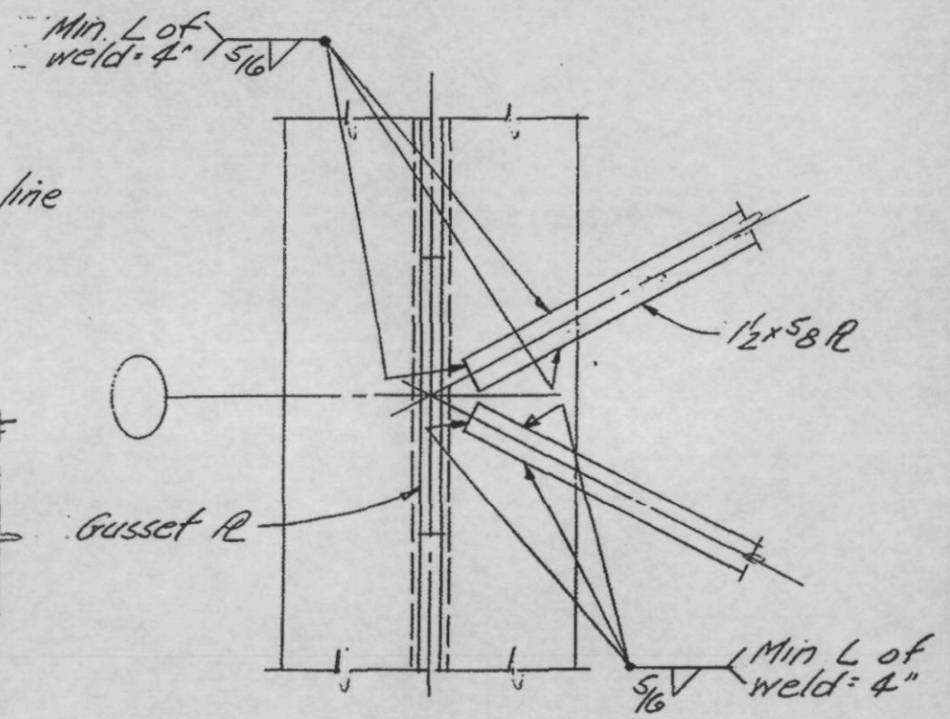

Interior Detail Perpendicular to Truss

LICENSED PROFESSIONAL ENGINEER — LESLIE E. ROBERTSON — No. 34360 — UNIVERSITY OF THE STATE OF NEW YORK

SIGNED

DRAWN

REVIEWED

18-A84-8.2

SKILLING HELLE CHRISTIANSEN ROBERTSON — Structural & Civil Engineers

PROJECT THE WORLD TRADE CENTER | TITLE DETAILS 13.1, 13.2, 13.3 | DATE 11-7-69

REVISIONS

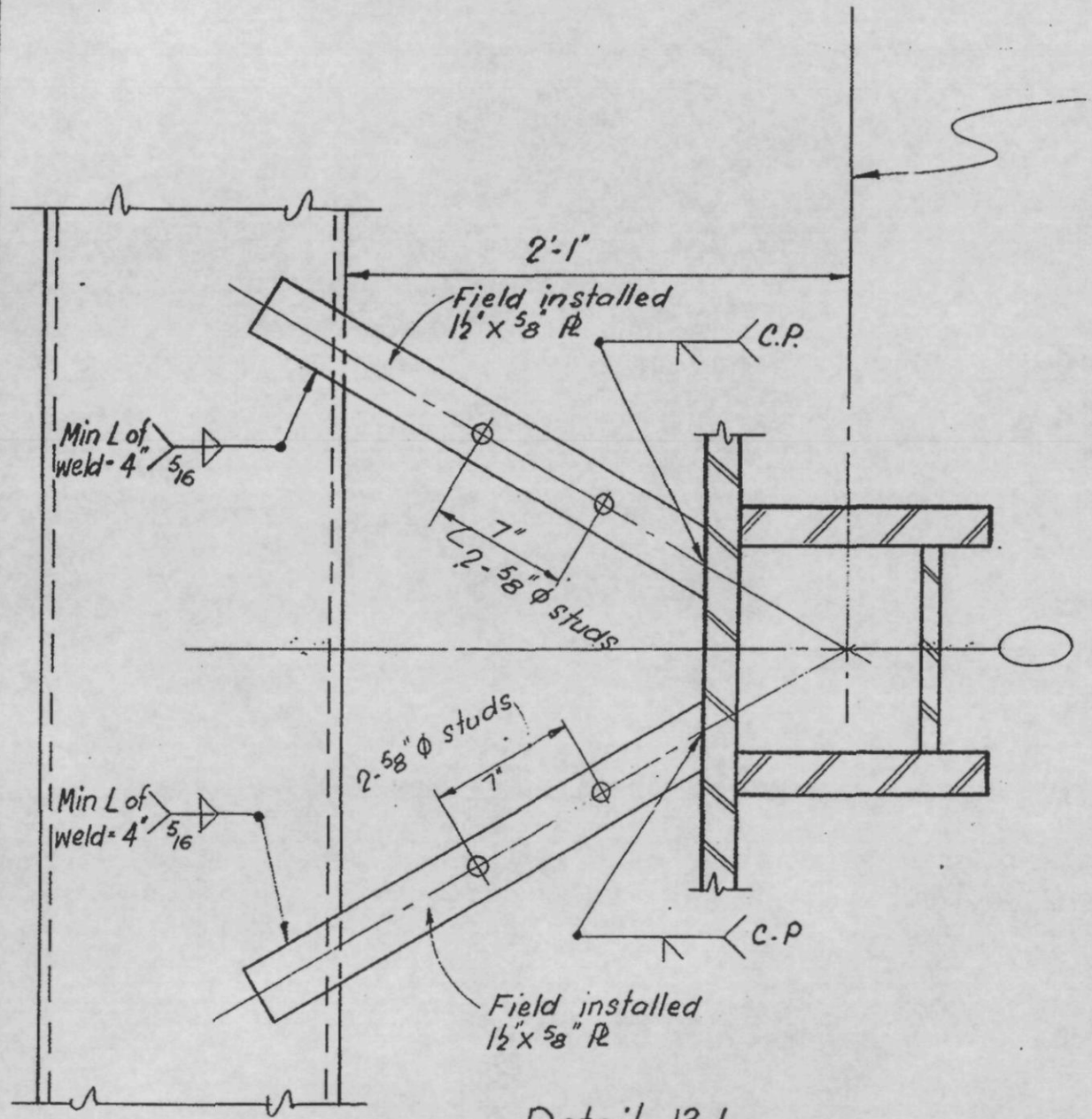

Detail 13.1

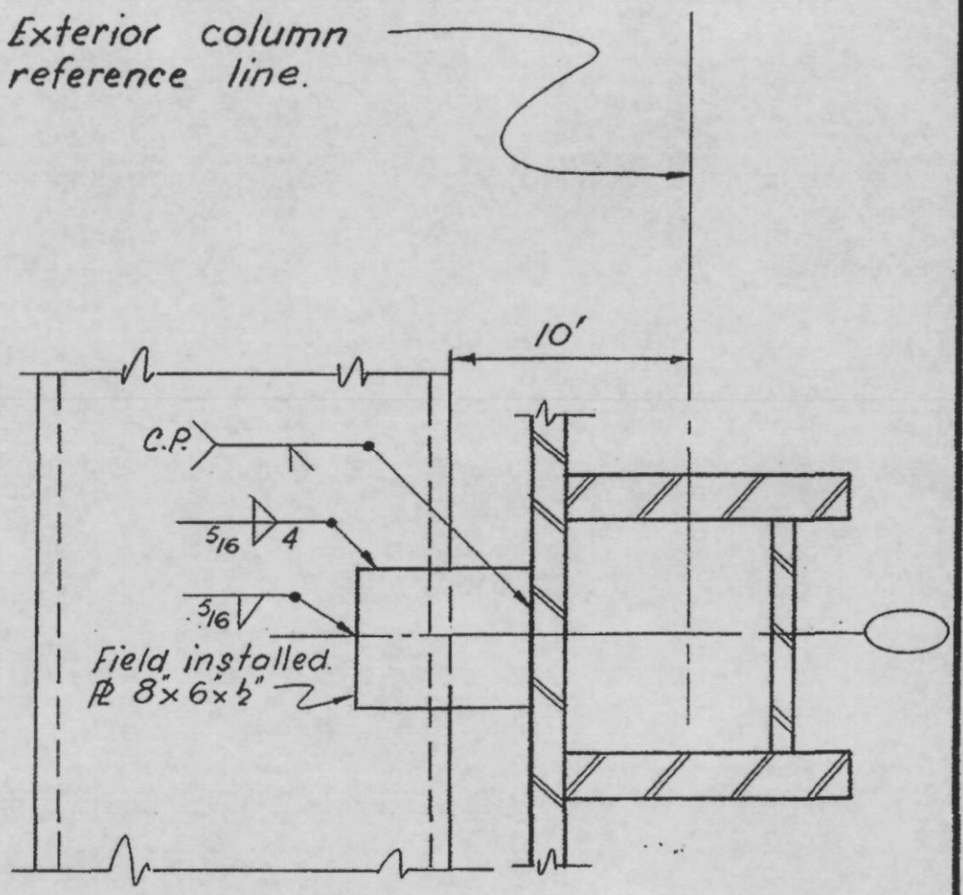

Detail 13.2 & 13.3

LICENSED PROFESSIONAL ENGINEER
LESLIE E. ROBERTSON
No. 34360
UNIVERSITY OF THE STATE OF NEW YORK

DESIGNED
W Lewer
DRAWN
T Terrelonge
REVIEWED

18-AB4-9

SKILLING, HELLE, CHRISTIANSEN, ROBERTSON — Structural & Civil Engineers

PROJECT: THE WORLD TRADE CENTER | TITLE: STUD ARRANGEMENT A & D | DATE: 11/1/69

REVISIONS

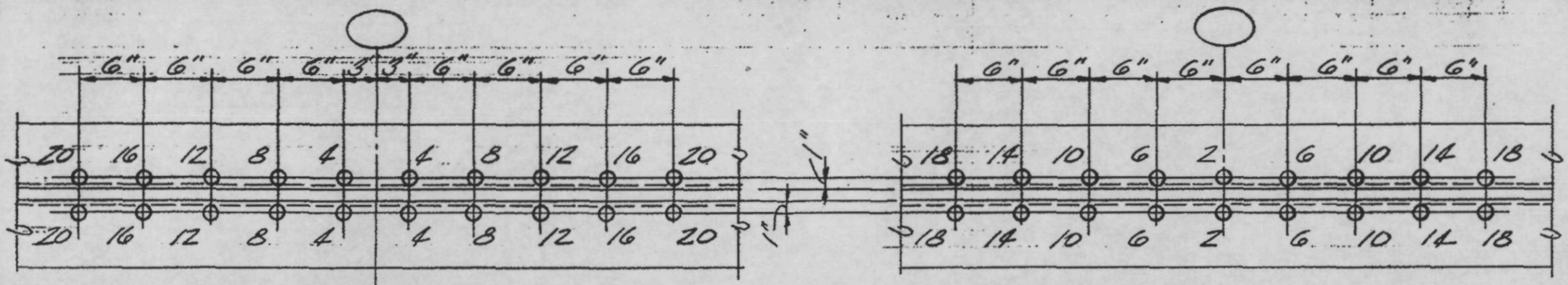

Arrangement A 4, 8, 12, 16, 20

Arrangement A 2, 6, 10, 14, 18

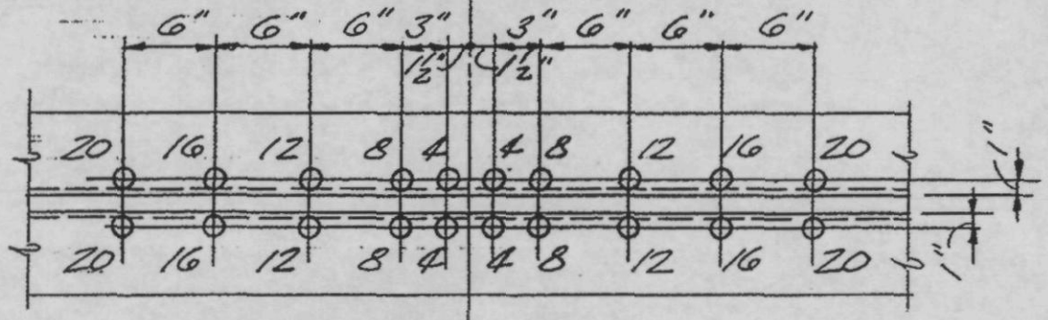

Arrangement D 4, 8, 12, 16, 20

Notes:

1. All studs shall be ¾"ϕ x 3" long headed studs unless otherwise noted.
2. For shear stud requirement at top panel points see Dwg. SB-187. Example (A10) indicates 10 studs located as shown in Arrangement A. Shear studs shall be placed at each location identified in the applicable arrangement by a number equal to or smaller than the number of studs required.

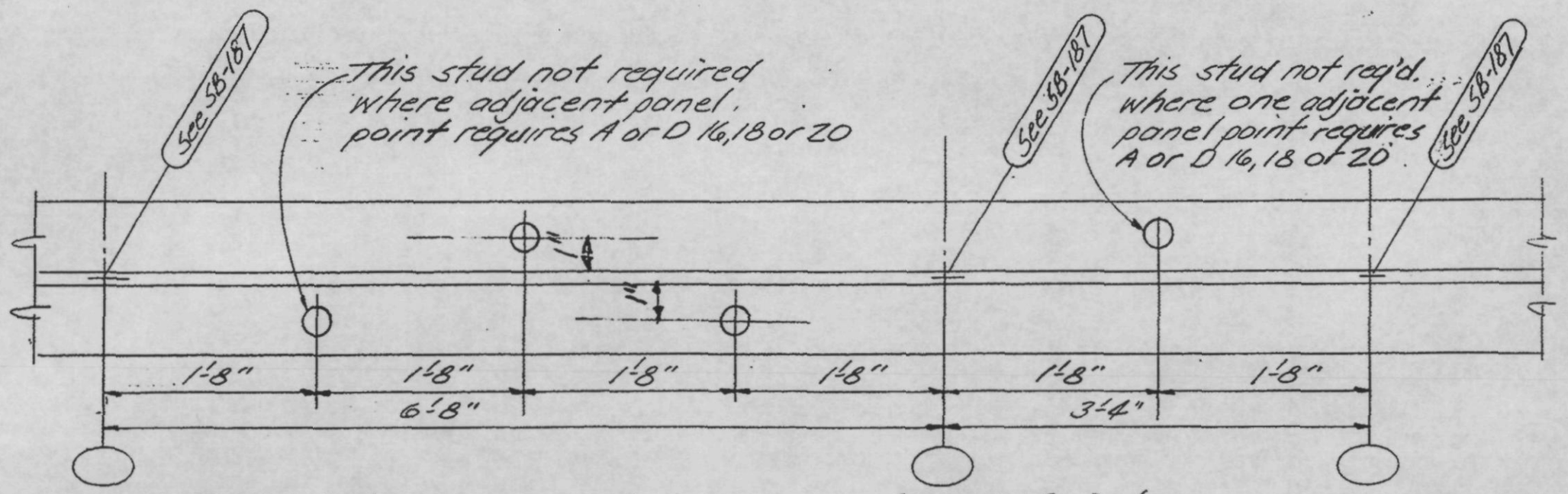

Typical Arrangement Between Panel Points

LICENSED PROFESSIONAL ENGINEER LESLIE E. ROBERTSON No. 34960 UNIVERSITY OF THE STATE OF NEW YORK

DESIGNED

DRAWN

REVIEWED

18-AB4-10.1

SKILLING, HELLE, CHRISTIANSEN, ROBERTSON — Structural & Civil Engineers

PROJECT: THE WORLD TRADE CENTER | TITLE: STUD ARRANGEMENT B, C, E & F | DATE: 11/7/69

REVISIONS

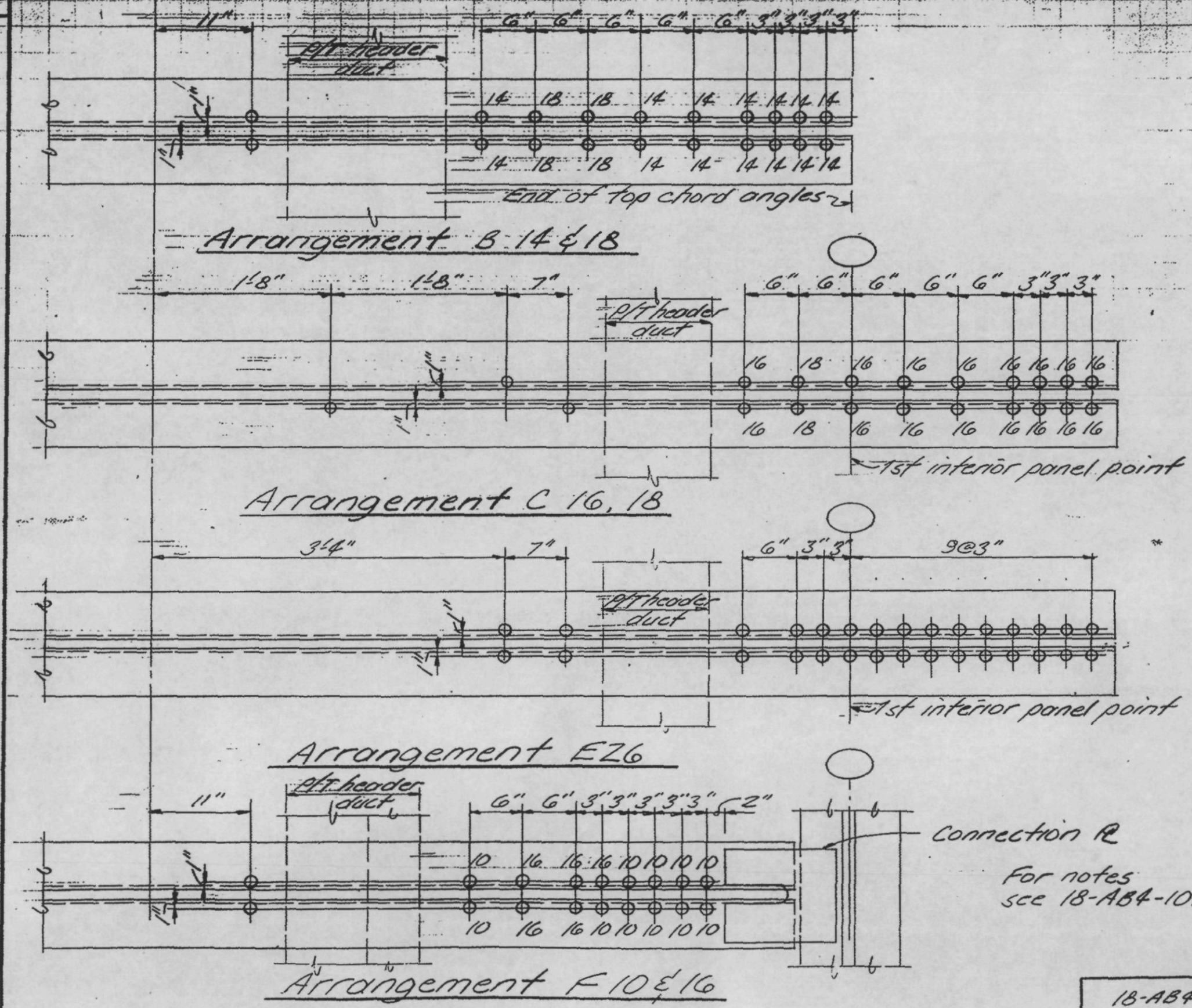

LICENSED PROFESSIONAL ENGINEER
LESLIE E. ROBERTSON
No. 34360
UNIVERSITY OF THE STATE OF NEW YORK

SIGNED

DRAWN

REVIEWED

18-AB4-10.2